DISTRIBUTION STANDARD SYSTEM (DSS)

EQUIPMENT CONTROL SYSTEM (ECS)

SOFTWARE REQUIREMENTS SPECIFICATION (SRS)

(DI-IPSC-81433)

Revision 7/Change 7

U.S. DEPARTMENT OF DEFENSE
DEFENSE LOGISTICS AGENCY
April 14, 2004

Prepared by:
DLA Systems Integration Office
for Distribution and Base Support (DSIO)
New Cumberland, PA

Prepared for:
Defense Distribution Center
(DDC)
New Cumberland, PA

Developer	Acquirer

TABLE OF CONTENTS

1.0 SCOPE 1-1
1.1 Identification 1-1
1.2 System Overview 1-2
1.3 Document Overview 1-3

2.0 REFERENCED DOCUMENTS 2-1

3.0 REQUIREMENTS 3-1
3.1 Required States and Modes 3-1
3.2 CSCI Capability Requirements 3-1
3.2.1 ECS - Context Diagram 3-2
3.2.2 0.DFD - ECS 3-5
3.2.3 T.DFD 3-8
3.2.3.1 T1.DFD - Subcontroller Manager 3-11
3.2.3.1.1 T11.PN - Decide Type of Subcontroller Message 3-14
3.2.3.1.2 T12.PN - Forward to Subcontroller 3-15
3.2.3.1.3 T13.PN - Forward to DSS 3-16

3.2.3.2 T2.DFD 3-17
3.2.3.2.1 T21.PN - Decide Type of UI Message 3-18
3.2.3.2.2 T22.PN - Process Action Request 3-19
3.2.3.2.3 T23.PN - Process Info Request 3-20

3.2.3.3 T3.DFD 3-21
3.2.3.3.1 T31.PN - DSS Interface Manager 3-22
3.2.3.3.2 T32.PN - DSS Input Buffer 3-23
3.2.3.3.3 T33.PN - DSS Message Logger 3-24

3.2.3.4 T4.DFD 3-25
3.2.3.4.1 T41.PN - AGV Interface Manager 3-26
3.2.3.4.2 T42.PN - AGV Input Buffer 3-27
3.2.3.4.3 T43.PN - AGV Output Buffer 3-28
3.2.3.4.4 T44.PN - AGV Message Logger 3-29

3.2.3.5 T5.DFD 3-30
3.2.3.5.1 T51.PN - NLSC Interface Manager 3-31
3.2.3.5.2 T52.PN - NLSC Input Buffer 3-32
3.2.3.5.3 T53.PN - NLSC Output Buffer 3-33
3.2.3.5.4 T54.PN - NLSC Message Logger 3-34

3.2.3.6 T6.DFD 3-35
3.2.3.6.1 T61.PN - Carousel Interface Manager 3-36
3.2.3.6.2 T62.PN - Carousel Input Buffer 3-37
3.2.3.6.3 T63.PN - Carousel Output Buffer 3-38
3.2.3.6.4 T64.PN - Carousel Message Logger 3-39

3.2.3.7 T7.DFD 3-40
3.2.3.7.1 T71.PN - Stacker Interface Manager 3-41
3.2.3.7.2 T72.PN - Stacker Input Buffer 3-42
3.2.3.7.3 T73.PN - Stacker Output Buffer 3-43
3.2.3.7.4 T74.PN - Stacker Message Logger 3-44

3.2.3.8 T8.DFD 3-45
3.2.3.8.1 T81.PN - UI Interface Manager 3-46
3.2.3.8.2 T82.PN - UI Input Buffer 3-47
3.2.3.8.3 T83.PN - UI Output Buffer 3-48
3.2.3.8.4 T84.PN - UI Message Logger 3-49

3.2.3.9 T9.DFD 3-50
3.2.3.9.1 T91.PN - HP Interface Manager 3-51
3.2.3.9.2 T92.PN - HP Input Buffer 3-52
3.2.3.9.3 T93.PN - HP Output Buffer 3-53
3.2.3.9.4 T94.PN - HP Message Logger 3-54

3.2.3.10 T10.DFD 3-55
3.2.3.10.1 T101.PN - A-B Interface Manager 3-56
3.2.3.10.2 T102.PN - A-B Input Buffer 3-57
3.2.3.10.3 T103.PN - A-B Output Buffer 3-58
3.2.3.10.4 T104.PN - A-B Message Logger 3-59

3.2.3.11 TA.DFD 3-60
3.2.3.11.1 TA1.PN - Towline Interface Manager 3-61
3.2.3.11.2 TA2.PN - Towline Input Buffer 3-62
3.2.3.11.3 TA3.PN - Towline Output Buffer 3-63
3.2.3.11.4 TA4.PN - Towline Message Logger 3-64

3.2.3.12 TB.DFD 3-65
3.2.3.12.1 TB1.PN - Pallet Conveyor Interface Manager 3-66
3.2.3.12.2 TB2.PN - Pallet Conveyor Input Buffer 3-67
3.2.3.12.3 TB3.PN - Pallet Conveyor Output Buffer 3-68
3.2.3.12.4 TB4.PN - Pallet Conveyor Message Logger 3-69

3.2.3.13 TC.DFD 3-70
3.2.3.13.1 TC1.PN - Tote Conveyor Interface 3-71
3.2.3.13.2 TC2.PN - Tote Conveyor Input Buffer 3-72
3.2.3.13.3 TC3.PN - Tote Conveyor Output Buffer 3-73
3.2.3.13.4 TC4.PN - Tote Conveyor Message Logger 3-74

3.2.3.14 TD.DFD 3-75
3.2.3.14.1 TD1.PN - Sorter Interface Manager 3-76
3.2.3.14.2 TD2.PN - Sorter Input Buffer 3-77
3.2.3.14.3 TD3.PN - Sorter Output Buffer 3-78
3.2.3.14.4 TD4.PN - Sorter Message Logger 3-79

3.2.3.15 TE.DFD ... 3-80
3.2.3.15.1 TE1.PN - Keypad Interface Manager ... 3-81
3.2.3.15.2 TE2.PN - Keypad Input Buffer ... 3-82
3.2.3.15.3 TE3.PN - Keypad Output Buffer ... 3-83
3.2.3.15.4 TE4.PN - Keypad Message Logger ... 3-84

3.2.3.16 T11.DFD ... 3-85
3.2.3.16.1 T111.PN - AWOS Interface Manager ... 3-86
3.2.3.16.2 T112.PN - AWOS Input Buffer ... 3-87
3.2.3.16.3 T113.PN - AWOS Output Buffer ... 3-88
3.2.3.16.4 T114.PN - AWOS Message Logger ... 3-89

3.2.3.17 T13.DFD ... 3-90
3.2.3.17.1 T131.PN - CSF Interface Manager ... 3-91
3.2.3.17.2 T132.PN - CSF Input Buffer ... 3-92
3.2.3.17.3 T133.PN - CSF Output Buffer ... 3-93
3.2.3.17.4 T134.PN - CSF Message Logger ... 3-94

3.2.3.18 T14.DFD ... 3-95
3.2.3.18.1 T141.PN - Raymond Carousel Interface Manager ... 3-96
3.2.3.18.2 T142.PN - Raymond Carousel Input Buffer ... 3-97
3.2.3.18.3 T143.PN - Raymond Carousel Output Buffer ... 3-98

3.2.3.19 T15.DFD ... 3-99
3.2.3.19.1 T151.PN - Norfolk Virginia DPI Tote Conveyor Interface ... 3-100
3.2.3.19.2 T152.PN - Norfolk Virginia DPI Tote Conveyor Input Buffer ... 3-101
3.2.3.19.3 T153.PN - Norfolk Virginia DPI Tote Conveyor Output Buffer ... 3-102
3.2.3.19.4 T154.PN - Norfolk Virginia DPI Tote Conveyor Message Logger ... 3-103

3.2.3.20 T16.DFD ... 3-104
3.2.3.20.1 T161.PN - Active Item Interface ... 3-105
3.2.3.20.2 T162.PN - Active Item Input Buffer ... 3-106
3.2.3.20.3 T163.PN - Active Item Output Buffer ... 3-107
3.2.3.20.4 T164.PN - Active Item Message Logger ... 3-108

3.2.3.21 T17.DFD ... 3-109
3.2.3.21.1 T171.PN - Tote/Package Conveyor Interface ... 3-110
3.2.3.21.2 T172.PN - Tote/Package Conveyor Input Buffer ... 3-111
3.2.3.21.3 T173.PN - Tote/Package Conveyor Output Buffer ... 3-112
3.2.3.21.4 T174.PN - Tote/Package Conveyor Message Logger ... 3-113

3.2.3.22 T18.DFD ... 3-114
3.2.3.22.1 T181.PN - Triax Interface Manager ... 3-115
3.2.3.22.2 T182.PN - Triax Input Buffer ... 3-116
3.2.3.22.3 T183.PN - Triax Output Buffer ... 3-117
3.2.3.22.4 T184.PN - Triax Message Logger ... 3-118

3.2.3.23 T19.DFD 3-119
3.2.3.23.1 T191.PN - Y109 Interface Manager 3-120
3.2.3.23.2 T192.PN - Y109 Input Buffer 3-121
3.2.3.23.3 T193.PN - Y109 Output Buffer 3-122
3.2.3.23.4 T194.PN - Y109 Message Logger 3-123

3.2.3.24 T20.DFD 3-124
3.2.3.24.1 T201.PN - PS Tote Conveyor Interface Manager 3-125
3.2.3.24.2 T202.PN - PS Tote Conveyor Input Buffer 3-126
3.2.3.24.3 T203.PN - Y109 Output Buffer 3-127
3.2.3.24.4 T204.PN - PS Tote Conveyor Message Logger 3-128

3.2.3.25 T21.DFD 3-129
3.2.3.25.1 T211.PN - DDJC Sorter Interface Manager 3-130
3.2.3.25.2 T212.PN - DDJC Sorter Input Buffer 3-131
3.2.3.25.3 T213.PN - DDJC Sorter Output Buffer 3-132
3.2.3.25.4 T214.PN - DDJC Sorter Message Logger 3-133

3.2.3.26 T22.DFD 3-134
3.2.3.26.1 T221.PN – DDDE PCS Interface Manager 3-135
3.2.3.26.2 T222.PN – DDDE PCS Input Buffer 3-136
3.2.3.26.3 T223.PN – DDDE PCS Output Buffer 3-137

3.2.4 U.DFD 3-138
3.2.4.1 U1.PN - User Interface Main Menu 3-140
3.2.4.2 U2.DFD 3-141
3.2.4.2.1 U21.PN - MHE Selection 3-142
3.2.4.2.2 U22.PN - Display MHE Status 3-143
3.2.4.2.3 U23.PN - Modify MHE Status 3-144
3.2.4.2.4 U24.PN - Ad Hoc Move Request 3-145
3.2.4.2.5 U25.PN - Purge Scheduling 3-146
3.2.4.2.6 U26.PN - M02 Up-Message Function 3-147

3.2.4.3 U3.DFD 3-148
3.2.4.3.1 U31.PN - File Selection 3-149
3.2.4.3.2 U32.PN - View Log Selection 3-150
3.2.4.3.3 U33.PN - Edit INI File 3-151

3.2.4.4 U4.DFD 3-152
3.2.4.4.1 U41.PN - System Selection 3-153
3.2.4.4.2 U42.PN - Workstation Startup/Shutdown 3-154
3.2.4.4.3 U43.PN - Transaction Logging ON/OFF 3-155

3.2.4.5 U5.DFD 3-156
3.2.4.5.1 U51.PN - Diagnostic 3-157
3.2.4.5.2 U52.PN - Event Viewer 3-158
3.2.4.5.3 U53.PN - Performance Monitor 3-159

3.2.4.6 U6.DFD 3-160
3.2.4.6.1 U61.PN - Help 3-161

3.2.4.7 U7.DFD 3-162
3.2.4.7.1 U71.PN - Inquiry 3-163

3.2.4.8 U8.DFD 3-164
3.2.4.8.1 U81.DFD 3-165
3.2.4.8.1.1 U811.PN - Display Conveyor Lane Status 3-168
3.2.4.8.1.2 U815.PN - Update Conveyor Inspection Lane Type 3-173

3.2.4.8.2 U82.DFD 3-175
3.2.4.8.2.1 U821.PN - Display Special Cart Location 3-181
3.2.4.8.2.2 U822.PN - Display Towline Spur Status 3-184
3.2.4.8.2.3 U823.PN - Display Drop Point Warehouse 3-186
3.2.4.8.2.4 U824.PN - Display Towline Loop Workload 3-188
3.2.4.8.2.5 U825.PN - Release Cart From Intradepot Queue 3-190
3.2.4.8.2.6 U826.PN - Release Cart From M/H Queue 3-192
3.2.4.8.2.7 U827.PN - Update Cart Type 3-194
3.2.4.8.2.8 U828.PN - Unlock Towline Workstation 3-196
3.2.4.8.2.9 U829.PN - Update M/H Pack Queue 3-198
3.2.4.8.2.10 U82A.PN - Update Towline Spur Status 3-200
3.2.4.8.2.11 U82B.PN - Update Towline Inspection Spur Type 3-202
3.2.4.8.2.12 U82C.PN - Update Drop Point Warehouse 3-204
3.2.4.8.2.13 U82D.PN - Abort Towline Chain 3-206

3.2.4.8.3 U83.DFD 3-208
3.2.4.8.3.1 U831.PN - Enter Sorter Data 3-211
3.2.4.8.3.2 U832.PN - Display Mission Sorter Workload - New Cumberland Only 3-213
3.2.4.8.3.3 U833.PN - Display CCP Sorter Workload - New Cumberland Only 3-215
3.2.4.8.3.4 U834.PN - Sorter Reject Chute 3-217
3.2.4.8.3.5 U834.PN - Sorter Reject Chute 3-218

3.2.4.8.4 U84.DFD 3-219
3.2.4.8.4.1 U841.PN - PLC Status Inquiry 3-222
3.2.4.8.4.2 U842.PN - Conveyance Inquiry 3-224
3.2.4.8.4.3 U843.PN - Workstation Inquiry 3-226
3.2.4.8.4.4 U844.PN - EDC-CN Inquiry 3-228
3.2.4.8.4.5 U845.PN - Request Move 3-230

3.2.4.8.5 U85.DFD 3-232
3.2.4.8.5.1 U851.PN - Start/Stop Conveyance System 3-236

3.2.4.8.6 U86.DFD 3-237
3.2.4.8.6.1 U861.PN - Fault Handling Cart Arrival 3-241
3.2.4.8.6.2 U862.PN - Fault Handling Cart At Workstation 3-243
3.2.4.8.6.3 U863.PN - Fault Handling Intradepot Receiving Queues 3-245

3.2.4.8.6.4 U864.PN - Fault Handling M/H Pack Queues 3-247
3.2.4.8.6.5 U865.PN - Fault Handling M/H Pack Lane Counts 3-249
3.2.4.8.6.6 U866.PN - Fault Handling Request PLC Zone Destination File Upload 3-251
3.2.4.8.6.7 U867.PN - Fault Handling Request Cart Status 3-253
3.2.4.8.6.8 U868.PN - Fault Handling Request PLC File Reset 3-255

3.2.4.9 U9.DFD 3-257
3.2.4.9.1 U91.PN-Control Panel 3-258
3.2.4.9.2 U92.PN-Device Statistics 3-261
3.2.4.9.3 U93.PN-Set Tote Weight 3-263
3.2.4.9.4 U94.PN-Set Error Lane 3-265
3.2.4.9.5 U95.PN-Set Lanes Greater Than 10Lbs 3-267

3.2.4.10 U10.DFD 3-269
3.2.4.10.1 U101.PN - ASRS Selection 3-274
3.2.4.10.2 U102.PN - Send Discrete Transaction 3-275
3.2.4.10.3 U103.PN - Send Move Request Message 3-277
3.2.4.10.4 U104.PN - Send Move Complete Message 3-279
3.2.4.10.5 U105.PN - Clear Container ID From PLC 3-281
3.2.4.10.6 U106.PN - Change Conveyor Status 3-283
3.2.4.10.7 U107.PN - ASRS Selection 3-285
3.2.4.10.8 U108.PN - Display Aisle Status 3-286
3.2.4.10.9 U109.PN - Display Station Data 3-288
3.2.4.10.10 U1010.PN - ASRS Selection 3-290
3.2.4.10.11 U1011.PN - Edit Aisle Status 3-291
3.2.4.10.12 U1012.PN - Edit Station Data 3-294
3.2.4.10.13 U1013.PN - Edit Tracking Area 3-296
3.2.4.10.14 U1014.PN - Manual Stacker Control 3-299

3.2.4.11 U11.DFD 3-301
3.2.4.11.1 U111.PN - Ministacker Handler System 3-302
3.2.4.11.2 U112.PN - Ministacker Error Recovery 3-304
3.2.4.11.3 U112.PN - Ministacker Error Recovery 3-305

3.2.4.12 U12.DFD 3-306
3.2.4.12.1 U121.PN - Enter Sorter Data 3-309
3.2.4.12.2 U124.PN - Sorter Reject Chute 3-311
3.2.4.12.2.1 U124.PN - Sorter Reject Chute 3-312

3.2.4.12.3 U125.PN – Reload Sorter Data – Tracy Only 3-313
3.2.4.12.3.1 U125.PN – Reload Sorter Data – Tracy Only 3-314

3.2.5 C.DFD 3-315
3.2.5.1 C1.PN - Carousel Traffic Controller Communications 3-316
3.2.5.2 C2.PN - Carousel Message Logger 3-317
3.2.5.3 C3.PN - Carousel Device Communications 3-318
3.2.5.4 C4.PN - Carousel Message Buffering 3-319

3.2.5.5 C5.PN - Carousel Message Formatting and Scheduling 3-320

3.2.6 S.DFD 3-321
3.2.6.1 S1.PN - Stacker Traffic Controller Communications 3-322
3.2.6.2 S2.PN - Stacker Message Logger 3-323
3.2.6.3 S3.PN - Stacker Device Communications 3-324
3.2.6.4 S4.PN - Stacker Message Buffering 3-325
3.2.6.5 S5.DFD 3-326
3.2.6.5.1 S51.PN - Generic Message Formatting and Scheduling 3-327
3.2.6.5.2 S52.DFD 3-328
3.2.6.5.2.1 S521.DFD 3-329
3.2.6.5.2.1.1 S5211.PN - System Status Inquiry 3-330
3.2.6.5.2.1.2 S5212.PN - Set Logging 3-331
3.2.6.5.2.1.3 S5213.PN - System Shutdown 3-332
3.2.6.5.2.1.4 S5214.PN - User Interface Ad Hoc Move 3-333

3.2.6.5.2.2 S522.DFD 3-334
3.2.6.5.2.2.1 S5221.PN - DSS Stacker Request 3-335
3.2.6.5.2.2.2 S5222.PN - DSS Pick/Stow Completion 3-336
3.2.6.5.2.2.3 S5223.PN - DSS Workstation Designation 3-337
3.2.6.5.2.2.4 S5224.PN - DSS Clear Workload 3-338

3.2.6.5.2.3 S523.DFD 3-339
3.2.6.5.2.3.1 S5231.DFD 3-340
3.2.6.5.2.3.1.1 S52311.PN - Store Complete Message ("71") 3-341
3.2.6.5.2.3.1.2 S52312.PN - Retrieve Complete ("61") Message 3-342

3.2.6.5.2.3.2 S5232.PN - Status Messages ("51") 3-343
3.2.6.5.2.3.3 S5233.DFD 3-344
3.2.6.5.2.3.3.1 S52331.PN - Workstation Release Request ("10") Message 3-345
3.2.6.5.2.3.3.2 S52332.PN - Crane Retrieval Complete ("62") 3-346
3.2.6.5.2.3.3.3 S52333.PN - Pallet has left Workstation ("72") Message 3-347

3.2.7 N.DFD 3-348
3.2.7.1 N1.PN - NLSC Traffic Controller Communications 3-349
3.2.7.2 N2.PN - NLSC Message Logger 3-350
3.2.7.3 N3.PN - NLSC Device Communications 3-351
3.2.7.4 N4.PN - NLSC Message Buffering 3-352
3.2.7.5 N5.PN - NLSC Message Formatting 3-353

3.2.8 A.DFD 3-354
3.2.8.1 A1.PN - AGV Traffic Controller Communications 3-355
3.2.8.2 A2.PN - AGV Message Logger 3-356
3.2.8.3 A3.PN - AGV Device Communications 3-357
3.2.8.4 A4.PN - AGV Message Buffering 3-358
3.2.8.5 A5.PN - AGV Message Formatting 3-359
3.2.8.6 A5.DFD 3-360

3.2.8.6.1 A51.DFD 3-361
3.2.8.6.1.1 A511.PN - AGV Status Inquiry 3-362
3.2.8.6.1.2 A512.PN - AGV Stand Info Inquiry 3-363
3.2.8.6.1.3 A513.PN - AGV Module Status Inquiry 3-364
3.2.8.6.1.4 A514.DFD 3-365
3.2.8.6.1.4.1 A5141.PN - UI Move Loads 3-366
3.2.8.6.1.4.2 A5142.PN - UI Remove Empty Module/Pallet 3-367
3.2.8.6.1.4.3 A5143.PN - UI Request Empty Module 3-368

3.2.8.6.1.5 A515.DFD 3-369
3.2.8.6.1.5.1 A151.PN - Restart 3-370
3.2.8.6.1.5.2 A5152.PN - Set Logging 3-371
3.2.8.6.1.5.3 A5153.PN - System Shutdown 3-372

3.2.8.6.2 A52.DFD 3-373
3.2.8.6.2.1 A521.PN - DSS Move Loads 3-374
3.2.8.6.2.2 A522.PN - DSS Remove Empty Module/Pallet 3-375
3.2.8.6.2.3 A523.PN - DSS Request Empty Module 3-376

3.2.8.6.3 A53.DFD 3-377
3.2.8.6.3.1 A531.PN - AGV Service Message 3-378
3.2.8.6.3.2 A532.PN - AGV Inquiry Response 3-379
3.2.8.6.3.3 A533.PN - Stand Inquiry Response 3-380
3.2.8.6.3.4 A534.PN - Pickup/Delivery Confirmation 3-381
3.2.8.6.3.5 A535.PN - AGV Error Transaction 3-382

3.2.9 H.DFD 3-383
3.2.9.1 H1.PN - HP Traffic Controller Communications 3-384
3.2.9.2 H2.PN - HP Message Logger 3-385
3.2.9.3 H3.PN - HP Device Communications 3-386
3.2.9.4 H4.PN - HP Message Buffering 3-387
3.2.9.5 H5.PN - HP Message Formatting 3-388

3.2.10 P.DFD 3-389
3.2.10.1 P1.PN - A-B PLCS Traffic Controller Communications 3-390
3.2.10.2 P2.PN - A-B PLCS Message Logger 3-391
3.2.10.3 P3.PN - A-B PLCS Device Communications 3-392
3.2.10.4 P4.PN - A-B PLCS Message Buffering 3-393
3.2.10.5 P5.PN - A-B PLCS Message Formatting and Scheduling 3-394

3.2.11 M1.DFD 3-395
3.2.11.1 M1.PN - Packing Carousel 3-396

3.2.12 M2.DFD 3-397
3.2.12.1 M2.PN - Receipt Induction Process 3-398

3.2.13 M3.DFD 3-399

3.2.13.1 M3.PN - Module Load 3-400
3.2.13.1.1 M31.PN - Module Load 3-401

3.2.14 X.DFD 3-402
3.2.14.1 X1.PN - Queue Manager 3-403

3.2.15 F.DFD 3-404
3.2.15.1 F1.PN - Tote Conveyor Traffic Controller Communications 3-405
3.2.15.2 F2.PN - Tote Conveyor Message Logger 3-406
3.2.15.3 F3.PN - Tote Conveyor Device Communications 3-407
3.2.15.4 F4.PN - Tote Conveyor Message Buffering 3-408
3.2.15.5 F5.DFD 3-409
3.2.15.5.1 F51.DFD 3-410
3.2.15.5.1.1 F511.DFD 3-412
3.2.15.5.1.1.1 F5111.PN - Startup/Shutdown Conveyor 3-413
3.2.15.5.1.1.2 F5112.PN - Set Logging 3-414
3.2.15.5.1.1.3 F5113.PN - System Shutdown (Software) 3-415

3.2.15.5.1.2 F513.PN - Update Station Status 3-416
3.2.15.5.1.3 F514.PN - Update Workstation Type 3-417

3.2.15.5.2 F52.DFD 3-418
3.2.15.5.2.1 F521.PN - Create Single Tote Move 3-419
3.2.15.5.2.2 F522.PN - Initiate Single Tote Move 3-420

3.2.15.5.3 F53.DFD 3-421
3.2.15.5.3.1 F531.PN - Move Tote Load 3-422

3.2.15.5.4 F54.DFD 3-423
3.2.15.5.4.1 F541.PN - Update PLC Zone Status 3-424

3.2.16 W.DFD 3-425
3.2.16.1 W1.PN - Pallet Conveyor Traffic Controller Communications 3-426
3.2.16.2 W2.PN - Pallet Conveyor Message Logger 3-427
3.2.16.3 W3.PN - Pallet Conveyor Device Communications 3-428
3.2.16.4 W4.PN - Pallet Conveyor Message Buffering 3-429
3.2.16.5 W5.DFD 3-430
3.2.16.5.1 W51.DFD 3-431
3.2.16.5.1.1 W511.DFD 3-432
3.2.16.5.1.1.1 W5111.PN - Startup/Shutdown Conveyor 3-433
3.2.16.5.1.1.2 W5112.PN - Set Logging 3-434
3.2.16.5.1.1.3 W5113.PN - System Shutdown (Software) 3-435

3.2.16.6 W52.DFD 3-436
3.2.16.6.1 W521.PN - Move Pallet Load 3-437

3.2.16.7 W53.DFD 3-438

3.2.16.7.1 W531.PN - Update PLC Zone Status 3-440
3.2.16.7.2 W532.PN - Process Load Present 3-441
3.2.16.7.3 W533.PN - Process Pallet Arrival 3-442
3.2.16.7.4 W534.PN - Process Transporter Status 3-443

3.2.17 B.DFD 3-444
3.2.17.1 B1.PN - Sorter Traffic Controller Communications 3-445
3.2.17.2 B2.PN - Sorter Message Logger 3-446
3.2.17.3 B3.PN - Communications 3-447
3.2.17.4 B4.PN - Sorter Message Buffering 3-448
3.2.17.5 B5.PN - Sorter Message Formatting 3-449

3.2.18 L.DFD 3-450
3.2.18.1 L1.PN - Towline Traffic Controller Communications 3-451
3.2.18.2 L2.PN - Towline Message Logger 3-452
3.2.18.3 L3.PN - Towline Device Communications 3-453
3.2.18.4 L4.PN - Towline Message Buffering 3-454
3.2.18.5 L5.DFD 3-455
3.2.18.5.1 L55.PN - Manage DSS Transactions 3-457
3.2.18.5.2 L56.PN - Move Towline Cart 3-458
3.2.18.5.3 L57.PN - Towline PLC Configuration/Tracking File Logger 3-459
3.2.18.5.4 L51.DFD 3-460
3.2.18.5.4.1 L511.DFD 3-462
3.2.18.5.4.1.1 L5111.PN - Update Cart Type 3-465
3.2.18.5.4.1.2 L5112.PN - Update Medium/Heavy Spur Priority 3-466
3.2.18.5.4.1.3 L5113.PN - Update Towline Spur Status 3-467
3.2.18.5.4.1.4 L5114.PN - Update Inspection Spur Status 3-468
3.2.18.5.4.1.5 L5115.PN - Update Drop Point Warehouse 3-469

3.2.18.5.4.2 L512.DFD 3-470
3.2.18.5.4.2.1 L5121.PN - Release Cart From Intradepot Queue 3-471
3.2.18.5.4.2.2 L5122.PN - Release Cart From Medium/Heavy Queue 3-472

3.2.18.5.4.3 L513.DFD 3-473
3.2.18.5.4.3.1 L5131.PN - Fault Handling Cart Arrival 3-477
3.2.18.5.4.3.2 L5132.PN - Fault Handling Cart At Workstation 3-478
3.2.18.5.4.3.3 L5133.PN - Fault Handling Intradepot Queues 3-479
3.2.18.5.4.3.4 L5134.PN - Fault Handling Medium/Heavy Pack Queues 3-480
3.2.18.5.4.3.5 L5135.PN - Fault Handling Medium/Heavy Pack Counts 3-481
3.2.18.5.4.3.6 L5136.PN - Fault Handling Request PLC Zone Destination File Update 3-482
3.2.18.5.4.3.7 L5137.PN - Fault Handling Request Cart Status 3-483
3.2.18.5.4.3.8 L5138.PN - Fault Handling Request PLC File Reset 3-484

3.2.18.5.4.4 L514.DFD 3-485
3.2.18.5.4.4.1 L5141.PN - Unlock Towline Workstation 3-486
3.2.18.5.4.4.2 L5142.PN - Abort Towline Chain 3-487
3.2.18.5.4.4.3 L5143.PN - Start/Stop Towline 3-488

3.2.18.5.5 L52.DFD 3-489
3.2.18.5.5.1 L521.DFD 3-490
3.2.18.5.5.1.1 L5211.PN - Update For Arrivals 3-492
3.2.18.5.5.1.2 L5212.PN - Update For Cart At Workstation 3-493
3.2.18.5.5.1.3 L5213.PN - Update For Missed Divert 3-494

3.2.18.5.5.2 L522.DFD 3-495
3.2.18.5.5.2.1 L5221.PN - Record Towline Spur/Transfer/Loop Status 3-498
3.2.18.5.5.2.2 L5222.PN - Record Towline Zone Mode Status 3-499
3.2.18.5.5.2.3 L5223.PN - Record Cart Destination File Upload 3-500
3.2.18.5.5.2.4 L5224.PN - Record First Loop Tracking File Upload 3-501
3.2.18.5.5.2.5 L5225.PN - Record Second Loop Tracking File Upload 3-502
3.2.18.5.5.2.6 L5226.PN - Record Single Cart Status 3-503

3.2.18.5.6 L53.DFD 3-504
3.2.18.5.6.1 L531.DFD 3-506
3.2.18.5.6.1.1 L5311.PN - Create Single Cart Move 3-509
3.2.18.5.6.1.2 L5312.PN - Initiate Single Cart Move 3-510
3.2.18.5.6.1.3 L5313.PN - Create Chained Cart Move 3-511
3.2.18.5.6.1.4 L5314.PN - Initiate Chained Cart Move 3-512
3.2.18.5.6.1.5 L5315.PN - Recreate Cart Move 3-513
3.2.18.5.6.1.6 L5316.PN - Determine Material Destination 3-514

3.2.18.5.6.2 L532.PN - Create Empty Cart Manager Moves 3-515
3.2.18.5.6.2.1 L5321.PN - Queue Empty Request 3-516
3.2.18.5.6.2.2 L5322.PN - Queue Empty Cart 3-517

3.2.18.5.6.3 L533.PN - Display Cart Routing 3-518

3.2.18.5.7 L54.DFD 3-519
3.2.18.5.7.1 L541.PN - Manage M/H Queues 3-520
3.2.18.5.7.2 L542.PN - Manage Empty Carts 3-521

3.2.19 K.DFD 3-523
3.2.19.1 K1.PN - Keypad Traffic Controller Communications 3-524
3.2.19.2 K2.PN - Keypad Message Logger 3-525
3.2.19.3 K3.PN - Keypad Device Communications 3-526
3.2.19.4 K4.PN - Keypad Message Buffering 3-527
3.2.19.5 K5.PN - Keypad Message Formatting 3-528

3.2.20 Towline, Tote Conveyor and Utility Keypad Conversations 3-529
3.2.20.1 K51.PN - [SEL] - Select Menu 3-530
3.2.20.1.1 K511.PN - [MOV] - Towline Cart Movement 3-531
3.2.20.1.1.1 K5111.PN - [CSC] - Create Single Cart Move 3-532
3.2.20.1.1.2 K5113.PN - [ISC] - Initiate Single Cart Move 3-533
3.2.20.1.1.3 K5114.PN - [ICC] - Initiate Chained Cart Move 3-534

3.2.20.1.2 K512.PN - [CAR] - Towline Cart Management 3-536
3.2.20.1.2.1 K5121.PN - [DMD] - Determine Material Destination 3-537
3.2.20.1.2.2 K5122.PN - [QER] - Queue Empty Request 3-538
3.2.20.1.2.3 K5123.PN - [QEC] - Queue Empty Cart 3-539
3.2.20.1.2.4 K5124.PN - [UCT] - Update Cart Type 3-540
3.2.20.1.2.5 K5125.PN - [RCM] - Recreate Cart Move 3-541

3.2.20.1.3 K513.PN - [CKD] - Tote Conveyor Menu 3-544
3.2.20.1.3.1 K5131.PN - [CST] - Create Single Tote Move 3-545
3.2.20.1.3.2 K5133.PN - [IST] - Initiate Single Tote Move 3-546

3.2.20.1.4 K514.PN - [UTL] - Keypad Utilities 3-547
3.2.20.1.4.1 K5141.PN - [KCA] - Keypad Conversation Authorization 3-548
3.2.20.1.4.2 K5142.PN - [DDR] - Display Database Record 3-549
3.2.20.1.4.2.1 K5142A.PN - [DDR] - Display Database Record - Chain Record 3-550
3.2.20.1.4.2.2 K5142B.PN - [DDR] - Display Database Record - Conveyance Record 3-551
3.2.20.1.4.2.3 K5142C.PN - [DDR] - Display Database Record - Function Record 3-553
3.2.20.1.4.2.4 K5142D.PN - [DDR] - Display Database Record - Move Record 3-554
3.2.20.1.4.2.5 K5142E.PN - [DDR] - Display Database Record - Workstation Record 3-555

3.2.20.1.4.3 K5143.PN - [RTE] - Display Cart Routing 3-557
3.2.20.1.4.4 K5144.PN - [SCL] - Set Cart Location 3-558

3.2.21 J.DFD 3-560
3.2.21.1 J1.PN - AWOS Traffic Controller Communications 3-561
3.2.21.2 J2.PN - AWOS Message Logger 3-562
3.2.21.3 J3.PN - AWOS Device Communications 3-563
3.2.21.4 J4.PN - AWOS Message Buffering 3-564
3.2.21.5 J5.DFD 3-565
3.2.21.5.1 J51.PN - Manage User Interface Transactions 3-566
3.2.21.5.2 J52.PN - Manage DSS Transactions 3-567
3.2.21.5.3 J53.DFD 3-568
3.2.21.5.3.1 J531.PN - Respond to PLC Lane Destination Request 3-569
3.2.21.5.3.2 J532.PN - Respond to Control Number/ Weight Info 3-570
3.2.21.5.3.3 J533.PN - Respond To Lane Status Change Message 3-571
3.2.21.5.3.4 J534.PN - Respond to AWOS Scan Mode Change 3-572

3.2.22 Q.DFD 3-573
3.2.22.1 Q1.PN - CSF Traffic Controller Communications 3-574
3.2.22.2 Q2.PN - CSF Message Logger 3-575
3.2.22.3 Q3.PN - CSF Device Communications 3-576
3.2.22.4 Q4.PN - CSF Message Buffering 3-577
3.2.22.5 Q5.DFD 3-578
3.2.22.5.1 Q51.DFD 3-579
3.2.22.5.1.1 Q511.DFD 3-580
3.2.22.5.1.1.1 Q5111.PN - Restart 3-581
3.2.22.5.1.1.2 Q5112.PN - Set Logging 3-582

3.2.22.5.1.1.3 Q5113.PN - System Shutdown 3-583

3.2.22.5.1.2 Q512.PN - Edit Station Status 3-584
3.2.22.5.1.3 Q513.DFD 3-585
3.2.22.5.1.3.1 Q5131.PN - Send Discrete Transaction 3-586
3.2.22.5.1.3.2 Q5132.PN - Send Move Request 3-587
3.2.22.5.1.3.3 Q5133.PN - Change Conveyor Status 3-588
3.2.22.5.1.3.4 Q5134.PN - Send Move Complete 3-589
3.2.22.5.1.3.5 Q5135.PN - Clear Load ID from PLC 3-590

3.2.22.5.1.4 Q514.PN - CSF Change Aisle Status 3-591
3.2.22.5.1.5 Q515.PN - User Interface Ad Hoc Move 3-592
3.2.22.5.1.6 Q516.PN - Manual Stacker Control 3-593
3.2.22.5.1.7 Q517.DFD 3-594
3.2.22.5.1.7.1 Q5171.PN - Request Tracking Read 3-595
3.2.22.5.1.7.2 Q5172.PN - Process Tracking Status Message 3-596
3.2.22.5.1.7.3 Q5173.PN - Start/Stop Section (Area) 3-597
3.2.22.5.1.7.4 Q5174.PN - Tracking Update Message 3-598

3.2.22.5.2 Q52.DFD 3-599
3.2.22.5.2.1 Q521.PN - DSS Stacker Request 3-600
3.2.22.5.2.2 Q522.PN - DSS Pick/Stow Completion 3-601
3.2.22.5.2.3 Q523.PN - DSS Workstation Designation 3-602
3.2.22.5.2.4 Q524.PN - DSS Clear Workload 3-603

3.2.22.5.3 Q53.DFD 3-604
3.2.22.5.3.1 Q531.DFD 3-605
3.2.22.5.3.1.1 Q5311.PN -Tracking Arrival Message (TA) 3-606
3.2.22.5.3.1.2 Q5312.PN -Tracking Status Message (TS) 3-607
3.2.22.5.3.1.3 Q5313.PN -Discrete Transition Message (DT) 3-608

3.2.22.5.3.2 Q532.DFD 3-609
3.2.22.5.3.2.1 Q5321 - Conveyor Status Message (ST) 3-610
3.2.22.5.3.2.2 Q5322.PN - Pallet Sizing Message (SZ) 3-611
3.2.22.5.3.2.3 Q5323.PN - Conveyor Fault Message (FA) 3-612

3.2.22.5.3.3 Q533.PN - Stacker Response Message (SR) 3-613

3.2.23 R.DFD 3-614
3.2.23.1 R1.PN - Tracy Raymond Carousel Traffic Controller Communications 3-615
3.2.23.2 R2.PN - Tracy Raymond Carousel Message Logger 3-616
3.2.23.3 R3.PN - Carousel Device Communications 3-617
3.2.23.4 R4.PN - Raymond Carousel Message Buffering 3-618
3.2.23.5 R5.PN - Raymond Carousel Message Formatting and Scheduling 3-619

3.2.24 E.DFD 3-620
3.2.24.1 E1.PN - Active Item Conveyor Traffic Controller Communications 3-621

3.2.24.2 E2.PN - Active Item Conveyor Message Logger 3-622
3.2.24.3 E3.PN - Active Item Conveyor Device Communications 3-623
3.2.24.4 E4.PN - Active Item Conveyor Message Buffering 3-624
3.2.24.5 E5.DFD 3-625
3.2.24.5.1 E51.DFD 3-626
3.2.24.5.1.1 E511.DFD 3-627
3.2.24.5.1.1.1 E5111.PN - Startup/Shutdown Conveyor 3-628
3.2.24.5.1.1.2 E5112.PN - Set Logging 3-629
3.2.24.5.1.1.3 E5113.PN - System Shutdown (Software) 3-630

3.2.24.5.1.2 E513.PN - Check Reject Station 3-631
3.2.24.5.1.3 E514.PN - Update Reject Station 3-632

3.2.24.5.2 E53.DFD 3-633
3.2.24.5.2.1 E531.PN - Move Active Item Load 3-634

3.2.24.5.3 E54.DFD 3-635
3.2.24.5.3.1 E541.PN - Startup/Shutdown Complete 07 Message 3-636

3.2.25 G.DFD 3-637
3.2.25.1 G1.PN - TRIAX Traffic Controller Communications 3-638
3.2.25.2 G2.PN - TRIAX Message Logger 3-639
3.2.25.3 G3.PN - TRIAX Device Communications 3-640
3.2.25.4 G4.PN - TRIAX Message Buffering 3-641
3.2.25.5 G5.DFD 3-642
3.2.25.5.1 G51.DFD 3-643
3.2.25.5.1.1 G511.DFD 3-644
3.2.25.5.1.1.1 G5111.PN - Set Logging 3-645
3.2.25.5.1.1.2 G5112.PN - System Shutdown 3-646

3.2.25.5.1.2 G512.PN - User Interface Ad Hoc Move 3-647

3.2.25.5.2 G52.DFD 3-648
3.2.25.5.2.1 G521.PN - DSS Movement Request 3-649
3.2.25.5.2.2 G522.PN - DSS Pick/Stow Completion 3-650
3.2.25.5.2.3 G523.PN - DSS Clear Workload 3-651
3.2.25.5.2.4 G524.PN - DSS Workstation Designator 3-652

3.2.25.5.3 G53.DFD 3-653
3.2.25.5.3.1 G531.DFD 3-654
3.2.25.5.3.1.1 G5311.PN -Conveyor Tracking Arrival Messages 3-655
3.2.25.5.3.1.2 G5312.PN - Conveyor Tracking Movement Messages 3-657
3.2.25.5.3.1.3 G5313.PN -Conveyor Restrict Movement Messages 3-658

3.2.25.5.3.2 G532.DFD 3-659
3.2.25.5.3.2.1 G5321.PN - Crane Fault Message 3-660
3.2.25.5.3.2.2 G5322.PN - Crane Movement Request Messages 3-661

3.2.25.5.3.2.3 G5323.PN - Crane Movement Response Messages 3-663

3.2.25.5.3.3 G533.PN - Crane Status Messages 3-665

3.2.26 V.DFD 3-666
3.2.26.1 V1.PN - Norfolk Virginia DPI Tote Conveyor Traffic Controller Communications 3-667
3.2.26.2 V2.PN - Norfolk Virginia DPI Tote Conveyor Message Logger 3-668
3.2.26.3 V3.PN - Norfolk Virginia DPI Tote Conveyor Device Communications 3-669
3.2.26.4 V4.PN - Norfolk Virginia DPI Tote Conveyor Database Update 3-670
3.2.26.5 V5.PN - Norfolk Virginia DPI Tote Conveyor Database Extract 3-671
3.2.26.6 V6.PN - Norfolk Virginia DPI Tote Conveyor Set Logging 3-672
3.2.26.7 V7.PN - Norfolk Virginia DPI Tote Conveyor Shutdown 3-673

3.2.27 D.DFD 3-674
3.2.27.1 D1.PN - Tote/Package Conveyor Traffic Controller Communications 3-675
3.2.27.2 D2.PN - Tote/Package Conveyor Message Logger 3-676
3.2.27.3 D3.PN - Tote/Package Conveyor Device Communications 3-677
3.2.27.4 D4.PN - Tote/Package Conveyor Message Buffering 3-678
3.2.27.5 D5.DFD 3-679
3.2.27.5.1 D51.DFD 3-680
3.2.27.5.1.1 D511.PN - Set Logging 3-681
3.2.27.5.1.2 D512.PN - System Shutdown (Software) 3-682

3.2.27.5.2 D53.DFD 3-683
3.2.27.5.2.1 D531.PN - Initiate Move Tote/Package Load 3-684
3.2.27.5.2.2 D532.PN - AWOS T48 Lane Message 3-685

3.2.27.5.3 D54.DFD 3-686
3.2.27.5.3.1 D541.PN/D541a.PN - New Tote/Package Move 3-687

3.2.28 I.DFD 3-688
3.2.28.1 I1.PN - Y109 Traffic Controller Communications 3-689
3.2.28.2 I2.PN - Y109 Message Logger 3-690
3.2.28.3 I3.PN - Y109 Device Communications 3-691
3.2.28.4 I4.PN - Y109 Message Buffering 3-692
3.2.28.5 I5.DFD 3-693
3.2.28.5.1 I51.DFD - Manage User Interface Transactions 3-694
3.2.28.5.1.1 I511.DFD 3-695
3.2.28.5.1.1.1 I5111.PN - Set Logging 3-696
3.2.28.5.1.1.2 I5112.PN - System Shutdown 3-697
3.2.28.5.1.1.3 I5113.PN - Synchronize PLC Mode 3-698

3.2.28.5.1.2 I512.PN - User Interface Ad Hoc Move 3-699

3.2.28.5.2 I52.DFD 3-700
3.2.28.5.2.1 I521.PN - DSS Movement Request 3-701

3.2.28.5.3 I53.DFD 3-702
3.2.28.5.3.1 I531.DFD - Pallet Tracking Movement Messages 3-703
3.2.28.5.3.1.1 I5311.PN - Pallet Tracking Messages 3-704
3.2.28.5.3.1.2 I5312.PN - Pallet Movement Messages 3-705

3.2.28.5.3.2 I532.DFD 3-706
3.2.28.5.3.2.1 I5321.PN - Case Tracking Messages 3-707
3.2.28.5.3.2.2 I5322.PN - Case Movement Messages 3-708

3.2.28.5.3.3 I533.PN - PLC Mode Messages 3-709

3.2.29 O.DFD 3-710
3.2.29.1 O1.PN - PS Tote Conveyor Traffic Controller Communications 3-711
3.2.29.2 O2.PN - PS Tote Conveyor Message Logger 3-712
3.2.29.3 O3.PN - PS Tote Conveyor Device Communications 3-713
3.2.29.4 O4.PN - PS Tote Conveyor Message Buffering 3-714
3.2.29.5 O5.DFD 3-715
3.2.29.5.1 O51.DFD 3-716
3.2.29.5.1.1 O511.PN - Set Logging 3-717
3.2.29.5.1.2 O512.PN - System Shutdown (Software) 3-718

3.2.29.5.2 O53.DFD 3-719
3.2.29.5.2.1 O531.PN - Initiate Move PS Tote Load 3-720

3.2.29.5.3 O54.DFD 3-721
3.2.29.5.3.1 O541.PN - New PS Tote Move 3-722

3.2.30 AA.DFD 3-723
3.2.30.1 AA1.PN - Tracy Sorter Traffic Controller Communications 3-724
3.2.30.2 AA2.PN - Tracy Sorter Message Logger 3-725
3.2.30.3 AA3.PN - Sorter Device Communications 3-726
3.2.30.4 AA4.PN - DDJC Sorter Message Buffering 3-727
3.2.30.5 AA5.PN -DDJC Sorter Message Formatting and Scheduling 3-728

3.2.31 BB.DFD 3-729

3.3 CSCI External Interface Requirements 3-730
3.4 CSCI Internal Interface Requirements 3-730
3.5 CSCI Internal Data Requirements 3-730
3.6 Adaptation Requirements 3-730
3.6.1 Location to Subcontroller Tables 3-730
3.6.2 Workstation to Index Tables 3-730
3.6.3 Routing Table 3-730
3.6.4 Subcontroller Table 3-731
3.6.5 Location Conversion Table 3-731
3.6.6 Device Table 3-731
3.6.7 Destination to Divert Tables 3-731

3.7 Safety Requirements 3-731
3.8 Security and Privacy Requirements 3-731
3.9 System Environment Requirements 3-731
3.9.1 Computer Resource Requirements 3-731
3.9.2 Computer Hardware Requirements 3-732
3.9.3 Computer Hardware Resource Utilization Requirements 3-732
3.9.4 Computer Software Requirements 3-732
3.9.5 Computer Communications Requirements 3-732
3.10 System Quality Factors 3-732
3.11 Design and Construction Constraints 3-732
3.12 Personnel-Related Requirements 3-733
3.13 Training-Related Requirements 3-733
3.14 Logistics-Related Requirements 3-733
3.15 Other Requirements 3-733
3.16 Packaging Requirements 3-733
3.17 Precedence and Criticality of Requirements 3-733

4.0 QUALIFICATION PROVISIONS 4-1
4.1 Testing and Analysis Methodologies 4-1

APPENDIX A DSS - ECS STRUCTURED ANALYSIS APPROACH TO ECS A-1

1.0 STRUCTURED ANALYSIS APPROACH TO ECS A-1
1.1 Primer on Data Flow Diagrams and Process Narratives A-1
1.2 Externals A-1
1.3 Processes A-1
1.3.1 Data Flows A-3
1.3.2 Data Stores A-3
1.3.3 Process Narratives A-3
1.3.4 Data Dictionary A-3

1.4 Equipment Control System Context and Zero Level Diagrams A-4
1.4.1 The Context Diagram A-4
1.4.2 Zero Level Data Flow Diagram A-4

1.5 Symbol and Syntax Conventions A-5

APPENDIX B DSS - ECS DATA DICTIONARY B-1

1.0 ECS Data Structure List B-1
1.1 ECS Data Definitions B-71

APPENDIX C ECS SCREENS C-1

1.0 Reference User Interface Process Narratives section. C-1

TABLE OF FIGURES

Figure 3.2.4.8.1-1 Conveyor Menu 3-167
Figure 3.2.4.8.1.1-1 Conveyor Display Menu 3-169
Figure 3.2.4.8.1.1-2 Display Conveyor Lane Status (Screen 1) 3-169
Figure 3.2.4.8.1.1-3 Display Conveyor Lane Status (Screen 2) 3-170
Figure 3.2.4.8.1.1-4 Update Conveyor Lane Menu 3-171
Figure 3.2.4.8.1.1-5 Update Conveyor Lane Status (Screen 1) 3-171
Figure 3.2.4.8.1.1-6 Update Conveyor Lane Status (Screen 2a) Active Item Error Lane 3-171
Figure 3.2.4.8.1.1-7 Update Conveyor Lane Status (Screen 2b) 3-172
Figure 3.2.4.8.1.2-1 Update Conveyor Inspection Lane Type 3-174
Figure 3.2.4.8.2-1 Towline Menu 3-180
Figure 3.2.4.8.2-2 Towline Display Menu 3-180
Figure 3.2.4.8.2.1-1 Display Special Cart Locations (Screen 1) 3-182
Figure 3.2.4.8.2.1-2 Display Special Cart Locations (Screen 2) 3-182
Figure 3.2.4.8.2.2-1 Display Towline Spur Status (Screen 1) 3-185
Figure 3.2.4.8.2.2-2 Display Towline Spur Status (Screen 2) 3-185
Figure 3.2.4.8.2.3-1 Display Drop Point Warehouse 3-187
Figure 3.2.4.8.2.4-1 Display Towline Loop Workload (Screen 1) 3-189
Figure 3.2.4.8.2.4-2 Display Towline Loop Workload (Screen 2) 3-189
Figure 3.2.4.8.2.5-1 Towline Release Cart Menu 3-191
Figure 3.2.4.8.2.5-2 Release Cart from Intradepot Receiving Queue 3-191
Figure 3.2.4.8.2.6-1 Release Cart from Medium/Heavy Pack Queue 3-193
Figure 3.2.4.8.2.7-1 Towline Update Cart Type Menu 3-195
Figure 3.2.4.8.2.7-2 Update Cart Type (Screen 1) 3-195
Figure 3.2.4.8.2.7-3 Update Cart Type (Screen 2) 3-195
Figure 3.2.4.8.2.8-1 Unlock Towline Workstation 3-197
Figure 3.2.4.8.2.9-1 Update Towline Medium/Heavy Queue Priority 3-199
Figure 3.2.4.8.2.10-1 Update Towline Spur Status (Screen 1) 3-201
Figure 3.2.4.8.2.10-2 Update Towline Spur Status (Screen 2) 3-201
Figure 3.2.4.8.2.11-1 Update Towline Inspection Spur Type 3-203
Figure 3.2.4.8.2.12-1 Update Drop Point Warehouse 3-205
Figure 3.2.4.8.2.13-1 Towline Miscellaneous Menu 3-207
Figure 3.2.4.8.2.13-2 Abort Towline Chain Conversation 3-207
Figure 3.2.4.8.3-1 Sortation Menu – New Cumberland Only 3-210
Figure 3.2.4.8.3.1-1 Enter Sort Data – New Cumberland Only 3-212
Figure 3.2.4.8.3.2-1 Display Mission Sorter Workload – New Cumberland Only 3-214
Figure 3.2.4.8.3.3-1 Display CCP Sorter Workload – New Cumberland Only 3-216
Figure 3.2.4.8.3.5-1 Sorter Reject Chute (Screen 1) – New Cumberland 3-218
Figure 3.2.4.8.3.5-2 Sorter Reject Chute (Screen 2) – New Cumberland Only 3-218
Figure 3.2.4.8.4-1 Terminal Menu 3-221
Figure 3.2.4.8.4.1-1 PLC Status Inquiry 3-223
Figure 3.2.4.8.4.2-1 Conveyance Inquiry (Screen 1) 3-225
Figure 3.2.4.8.4.2-2 Conveyance Inquiry (Screen 2) 3-225
Figure 3.2.4.8.4.3-1 Workstation Inquiry (Screen 1) 3-227
Figure 3.2.4.8.4.3-2 Workstation Inquiry (Screen 2) 3-227
Figure 3.2.4.8.4.4-1 EDC-CN Inquiry (Screen 1) 3-229

Figure 3.2.4.8.4.4-2 EDC-CN Inquiry (Screen 2) 3-229
Figure 3.2.4.8.4.5-1 Request Move 3-231
Figure 3.2.4.8.5-1 Start/Stop Main Menu 3-234
Figure 3.2.4.8.5-2 Start / Stop Conveyance 3-234
Figure 3.2.4.8.6-1 Fault Handling Menu 3-240
Figure 3.2.4.8.6.1-1 Fault Handling - Cart Arrival 3-242
Figure 3.2.4.8.6.2-1 Fault Handling - Cart at Workstation 3-244
Figure 3.2.4.8.6.3-1 Fault Handling - Intradepot Receiving Queues (Screen 1) 3-246
Figure 3.2.4.8.6.3-2 Fault Handling - Intradepot Receiving Queues (Screen 2) 3-246
Figure 3.2.4.8.6.4-1 Fault Handling - Medium / Heavy Pack Queues (Screen 1) 3-248
Figure 3.2.4.8.6.4-2 Fault Handling - Medium / Heavy Pack Queues (Screen 2) 3-248
Figure 3.2.4.8.6.5-1 Fault Handling - Medium / Heavy Pack Lane Counts 3-250
Figure 3.2.4.8.6.6-1 Fault Handling - Request PLC Zone Destination File Upload 3-252
Figure 3.2.4.8.6.7-1 Fault Handling - Request Cart Status 3-254
Figure 3.2.4.8.6.8-1 Fault Handling - Request PLC File Reset 3-256
Figure 3.2.4.9.1-1 Control Panel (Screen 1) 3-259
Figure 3.2.4.9.1-2 Control Panel (Screen 2) 3-259
Figure 3.2.4.9.1-3 Control Panel (Screen 3) 3-260
Figure 3.2.4.9.2-1 Device Statistics (Screen 1) 3-262
Figure 3.2.4.9.2-2 Device Statistics (Screen 1) 3-262
Figure 3.2.4.9.3-1 Set Tote Weight 3-264
Figure 3.2.4.9.4-1 Set Error Lane (Screen 1) 3-265
Figure 3.2.4.9.4-2 Set Error Lane (Screen 2) 3-266
Figure 3.2.4.9.5-1 Set Lanes Greater Than 10Lbs (Screen 1) 3-268
Figure 3.2.4.9.5-2 Set Lanes Greater Than 10Lbs (Screen 2) 3-268
Figure 3.2.4.10-1 ASRS Menu 3-273
Figure 3.2.4.10.2-1 Conveyor Message Menu 3-276
Figure 3.2.4.10.2-2 Send Discrete Transaction (Screen 1) 3-276
Figure 3.2.4.10.2-3 Send Discrete Transaction (Screen 2) 3-276
Figure 3.2.4.10.3-1 Send Move Request Message (Screen 1) 3-278
Figure 3.2.4.10.3-2 Send Move Request Message (Screen 2) 3-278
Figure 3.2.4.10.4-1 Send Move Complete Message (Screen 1) 3-280
Figure 3.2.4.10.4-2 Send Move Complete Message (Screen 2) 3-280
Figure 3.2.4.10.5-1 Clear Load ID From PLC (Screen 1) 3-282
Figure 3.2.4.10.5-2 Clear Load ID From PLC (Screen 2) 3-282
Figure 3.2.4.10.6-1 Change Conveyor Status (Screen 1) 3-284
Figure 3.2.4.10.6-2 Change Conveyor Status (Screen 2) 3-284
Figure 3.2.4.10.8-1 Display Message Menu 3-287
Figure 3.2.4.10.8-2 Display Aisle Status (Screen 1) 3-287
Figure 3.2.4.10.8-3 Display Aisle Status (Screen 2) 3-287
Figure 3.2.4.10.9-1 Display Station Data (Screen 1) 3-289
Figure 3.2.4.10.9-2 Display Station Data (Screen 2) 3-289
Figure 3.2.4.10.9-3 Display Station Data (Screen 3) 3-289
Figure 3.2.4.10.11-1 Edit Message Menu 3-292
Figure 3.2.4.10.11-2 Edit Aisle Status (Screen 1) 3-292
Figure 3.2.4.10.11-3 Edit Aisle Status (Screen 2) 3-292
Figure 3.2.4.10.11-4 Edit Aisle Status - ((Delete Active Transaction) (Screen 3)) 3-293

Figure 3.2.4.10.12-1 Edit Station Data (Screen 1)..... 3-295
Figure 3.2.4.10.12-2 Edit Station Data (Screen 2)..... 3-295
Figure 3.2.4.10.13-1 Edit Tracking Area (Screen 1) 3-297
Figure 3.2.4.10.13-2 Edit Tracking Area (Screen 2) 3-297
Figure 3.2.4.10.13-3 Edit Tracking Area (Screen 3) 3-298
Figure 3.2.4.10.14-1 Manual Stacker Control Menu 3-300
Figure 3.2.4.10.14-2 Manual Stacker Control (Screen 1)..... 3-300
Figure 3.2.4.10.14-3 Manual Stacker Control (Format Help) 3-300
Figure 3.2.4.11.3-1 Sortation Menu – Tracy Only 3-308
Figure 3.2.4.8.6.8-1 Enter Sort Data – Tracy Only..... 3-310
Figure 3.2.4.12.2.1-1 Sorter Reject Chute (Screen 1) –Tracy 3-312
Figure 3.2.4.12.2.1-2 Sorter Reject Chute (Screen 2) – Tracy Only 3-312

1.0 SCOPE

1.1 Identification

This document establishes a Software Requirements Specification (SRS) for the creation of the Equipment Control System (ECS) for installation at the following installations:

- Defense Distribution Depot San Diego, CA (DDDC)
- Defense Distribution Depot Norfolk, VA (DDNV)
- Defense Distribution Depot Jacksonville, FL (DDJF)
- Defense Distribution Depot Puget Sound, WA (DDPW)
- Defense Distribution Depot Hill, UT (DDHU)
- Defense Distribution Depot at Mechanicsburg, PA (DDSP-W IMC),
- Defense Distribution Depot at Richmond, VA (DDRV),
- Defense Distribution Depot at New Cumberland, PA (DDSP-E EDC),
- Defense Distribution Depot Pearl Harbor, HI (DDPH)
- Defense Distribution Depot Guam, (DDPH)
- Defense Distribution Depot Yokosuka, Japan (DDYJ)
- Defense Distribution Depot Oklahoma City, OK (DDOO)
- Defense Distribution Depot at Tracy, CA (DDJC-Tracy)
- Defense Distribution Depot at Red River, TX (DDRT)
- Defense Distribution Mapping Activity at Richmond, VA (DDMA)
- Defense Distribution Depot Europe at Germersheim, Germany (DDDE)
-

The requirements/concept address all software resident on PC or workstation-sized computers which will drive the following:

- NISTARS Laser Scanner Controller (NLSC),
- NISTARS Automated Storage and Retrieval System (ASRS) Controller (NMC),
- Navy STACKMAN Unit Loader,
- Navy and DLA Automated Guided Vehicle (AGV),
- DLA Consolidated Subsistence Facility (CSF),
- Navy and DLA Carousel Controllers,
- Navy and Air Force ASRS Controllers,
- Navy, Air Force and DLA Conveyors,
- DLA Allen-Bradley PLC,
- DLA Towline,
- DLA Pallet Conveyor,
- DLA Tote Conveyor,
- DLA Sorter,
- DLA Automated Weigh and Offer Systems (AWOS),
- Air Force Dimension and Weigh Systems (DAWS),
- DLA Active Item Scanner System

- DLA TRIAX Automated Storage and Retrieval System (ASRS) Controller (TRIAX), and
- communications interface with DSS (Upper Tier) functions.

1.2 System Overview

In August 1994, the Defense Distribution Systems Center (DDSC) authorized Peat Marwick (KPMG) to study the feasibility of a single equipment control system for use at all Defense Logistics Agency (DLA) depots that utilize computer-controlled mechanization. The recommendations of this study were presented in Report 3 of the KPMG study entitled "Lower Tier Standardization Evaluation". The study team proposed a portable, low-functionality system that would receive a single, Standard Movement Message (SMM) for all movement requests. DSDC proposed ECS as an equipment control system that would meet these ideals. On August 1, 1995, DDSC authorized DSDC to commence work on the development of ECS.

The purpose of ECS is to eliminate the need for the Distribution Standard System (DSS) to be involved in the mechanics of material movement at DLA depots. ECS accepts a request to move material from DSS using an SMM and will accomplish the move with no further input from DSS.

In the original version of ECS, Phase 1, the code necessary for implementation at the DLA Depots in Jacksonville, FL (DDJF), Hill AFB, UT (DDHU), Norfolk, VA (DDNV), Puget Sound, WA (DDPW), and San Diego, CA (DDDC) was developed. In Phase 2 of ECS, the code necessary for implementation at the DLA Depots in Mechanicsburg, PA (DDSP-W), and Richmond, VA (DDRV), was developed. In Phase 3, ECS, the code for implementation at the DLA Depot in New Cumberland, PA (DDSP-E) was developed. In Phase 4, ECS, the code necessary for implementation at the DLA Depots in San Joaquin Tracy, CA (DDJC-Tracy), Warner Robins, GA (DDWG), and the code for AWOS/DAWS was developed. In Phase 5, ECS, the code necessary for implementation at the DLA Depots in OCONUS Pearl Harbor, HI (DDPH), Guam (DDPH-Guam), and Yokosuka Japan (DDYJ) was developed. The expansion of the control number and conveyance ID fields from five (5) to seven (7) positions was also completed for all sites on that same baseline, and additional code for DLA Depot in San Joaquin Tracy, CA (DDJC-Tracy) was developed. Additional code is being developed to support the conveyor replacement and the Freight Terminal at Building Y-109 and W143 at DDNV. The next group of changes includes an Active Item Package Conveyor at DDSP-E, a Tote/Package Conveyor system at DDOO and a Vertical/Horizontal Tote Conveyor at DDPW. The following changes supported the replacement of the Ministackers at DDHU and a new ECS User Interface at DDNV to support the Ministacker end of aisle operation for auto and stand alone mode. The next set of changes included the Stackman AS.RS at DDDC San Diego, and the Mission/CCP Sorters at DDJC Tracy. The next set of changes supported the DDMA at Richmond, VA. Additional changes support the DDDE in Germersheim, Germany.

1.3 Document Overview

This document describes the interface requirements that will serve as a basis for the DSS ECS software.

Section 2 outlines referenced documents. Section 3 defines requirements and corresponding capabilities. Section 4 lists qualification provisions. Section 5 lists any associated notes.

2.0 REFERENCED DOCUMENTS

KPMG Peat Marwick L.L.P report, subject "Lower Tier Standardization Evaluation"

Military Standard Software Development and Documentation Standards, MIL-STD-498

DSDC Project Guide for Implementing CMM Level 2, DSDC 8120.001

DSS Standards & Procedures (MSS/DS-XM0)

Borland C++ Documentation

Microsoft Developer Kit

Microsoft Windows NT Server Documentation

Microsoft SNA Server Documentation

Oracle8 Database and System Administration Guide

Advanced Windows. Jeffrey Richter. ISBN - 1-55615-677-4

Inside Windows NT. Helen Cluster. ISBN - 1-55615-481-X

Mastering Windows NT Programming. B. Myers, E. Hamer. ISBN - 0-7821-1264-1

Programming Windows. Charles Petzold. ISBN - 1-55615-395-3

Windows NT: A Developers Guide. Kevin Goodman. ISBN - 1-55851-306-X

Windows NT Unleashed. Robert Cowart. ISBN - 0-672-30685-9

DDC Environmental Test Plan

ECS Project Management Plan, latest version

DSS INFO/MAN REFERENCE GUIDE for ENVIRONMENTAL TEST, IOC and PRODUCTION

DSS SECS Psuedocoding Standard

DSS ECS Software Development Plan (SDP), DI-IPSC-81427, archived version dated November 1, 1996

Operation Concept Description (OCD), DI-IPSC-81430, latest version

Interface Requirements Specifications (IRS), DI-IPSC-81434, archived version dated December 14, 2001

Interface Design Description (IDD), DI-IPSC-81436, latest version

Database Design Description (DBDD), DI-IPSC-81437, latest version

System/Subsystem Specification (SSS), DI-IPSC-81431, latest version

System/Subsystem Design Description (SSDD), DI-IPSC-81432, latest version

Software Design Description (SDD), DI-IPSC-81435, latest version

Software Requirements Specification (SRS), DI-IPSC-81433, latest version

Software Installation Plan (SIP), DI-IPSC-81428, latest version

Software Product Specification (SPS), DI-IPSC-81441, latest version

Software User Manual (SUM), DI-IPSC-81443, latest version

ECS Site Survey - Defense Distribution Depot Hill, UT - Memorandum for the Record, dated November 20, 1995

ECS Site Survey - Defense Distribution Depot San Diego, CA - Memorandum for the Record, dated November 20, 1995

ECS Site Survey - Defense Distribution Depot Jacksonville, FL - Memorandum for the Record, dated March 6, 1996

ECS Site Survey - Defense Distribution Depot Norfolk, VA - Memorandum for the Record, dated March 7, 1996

ECS Site Survey - Defense Distribution Depot Puget Sound, WA - Memorandum for the Record, dated March 15, 1996

ECS Site Survey - Defense Distribution Depot Richmond, VA - Memorandum for the Record, dated August 14, 1996

ECS Site Survey - Defense Distribution Depot Mechanicsburg, PA - Memorandum for the Record, dated August 29, 1996

Amendment to DSS-SP5-376, SCR Amendment for ECS Interface with IMC Walk & Pick

DDSP-D Memorandum for DSDC-MDL through DDRE-T, "Cart Flow Information for Standard ECS" with attachment

ECS Site Survey - Defense Distribution Depot New Cumberland, PA - Memorandum for the Record, April 28, 1998

ECS Site Survey - Defense Distribution Depot Tracy, CA - Memorandum for the Record, dated February 23, 1999

ECS Site Survey - Defense Distribution Depot Yokosuka, Japan - Memorandum for the Record

ECS Site Survey - Defense Distribution Depot Pearl Harbor, Hawaii - Memorandum for the Record

ECS Site Survey - Defense Distribution Depot Guam - Memorandum for the Record

ECS Site Survey - Defense Distribution Depot Oklahoma City, OK - Memorandum for the Record

ECS Site Survey - Defense Distribution Depot Warner Robins, GA - Memorandum for the Record

ECS Site Survey - Defense Distribution Depot Red River, TX - Memorandum for the record

ECS Design Requirement Criteria For Triax - Defense Distribution Depot Norfolk, VA - Design Meeting Minutes 05 December 2000

Technical Specification for Upgrade of TRIAX AS/RS, Bldg. W-143, DDNV - TRIAX Project #SP3100-00-C-0027 - Defense Distribution Depot Norfolk, VA

Technical Specification for Active Item Scanner System, Building 2001, DDSP - Defense Distribution Depot Susquehanna, PA

Technical Specification for Replace Tote Conveyor System, Floors 1-4, Building W-143 DDNV - Defense Distribution Depot Norfolk, VA

Technical Specification for Freight Terminal Mechanization System, Building Y-109, DDNV - Defense Distribution Depot Norfolk, VA

Technical Specification for Building 467 Vertical Tote Conveyor Replacement Project for DDPW dated July 16, 2002.

ECS Site Survey - Defense Distribution Depot Tracy - Memorandum for the record.

3.0 REQUIREMENTS

3.1 Required States and Modes

Required states and modes are described in the ECS System/Subsystem Specification.

3.2 CSCI Capability Requirements

Software requirements and capabilities are defined in a series of data flow diagrams and process narratives supported by data dictionary definitions. Appendix B describes the process by which these diagrams, narratives, and definitions are created. Each element has a unique number associated with it in addition to its name. This number indicates the position and relationship the element has in the hierarchy of elements. To help the reader identify which subsystem an element belongs to, letter designations are used on the first level of partitioning representing physical subsystems.

"A" - Designates the AGV System Controller Subsystem
"B" - Designates the Sorter Subsystem
"C" - Designates the Carousel System Controller Subsystem
"D" - Designates the DDOO Tote/Package System Controller Subsystem
"E" - Designates the Active Item System Controller Subsystem
"F" - Designates the DDSP-E Tote Conveyor Subsystem
"G" - Designates the TRIAX System Controller Subsystem
"H" - Designates the DLA Hewlett Packard Subsystem
"I" - Designates the Freight Terminal At Y-109 Subsystem
"J" - Designates the AWOS Subcontroller
"K" - Designates the Keypad Subsystem
"L" - Designates the Towline Subsystem
"M" - Designates Upper Tier changes
"N" - Designates the NLSC System Controller Subsystem
"O - Designates the PS Tote Conveyor Subcontroller
"P" - Designates the DLA Allen-Bradley PLC Subsystem
"Q" - Designates the CSF Subsystem
"R" - Designates the Raymond Carousel System Controller Subsystem
"S" - Designates the Stacker Processing Subsystem
"T" - Designates the Traffic Controller Subsystem
"U" - Designates the User Interface Subsystem
"V" - Designates the Norfolk Virginia DPI Tote Conveyor Subcontroller
"W" - Designates the Pallet Conveyor Subsystem
"X" - Designates Upper Tier changes
"Y" - Designates Upper Tier changes
"Z" - Designates Upper Tier changes
"AA" - Designates DDJC Mission/CCP Sorter Subsystem
"BB" - Designates DDDE Package Conveyor System Subcontroller

3.2.1 ECS - Context Diagram

Process ID #
ECS CONTEXT DIAGRAM Page 1 of 3

Date
November 6, 1997

Requirement ID #(s)
ALL

Data Flow Diagram

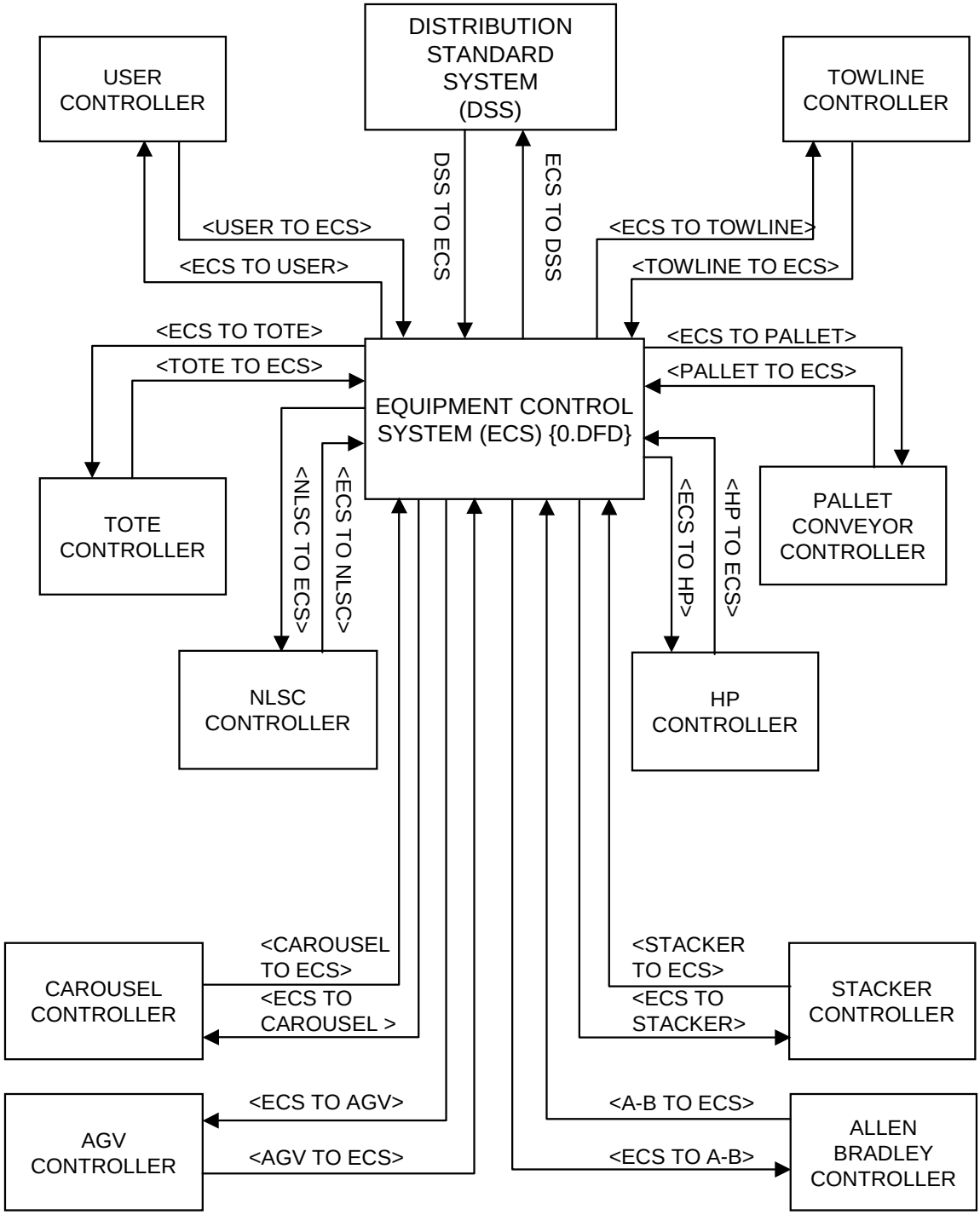

Process ID #	Date
ECS CONTEXT DIAGRAM Page 2 of 3	November 6, 1997

Requirement ID #(s)
ALL

Data Flow Diagram

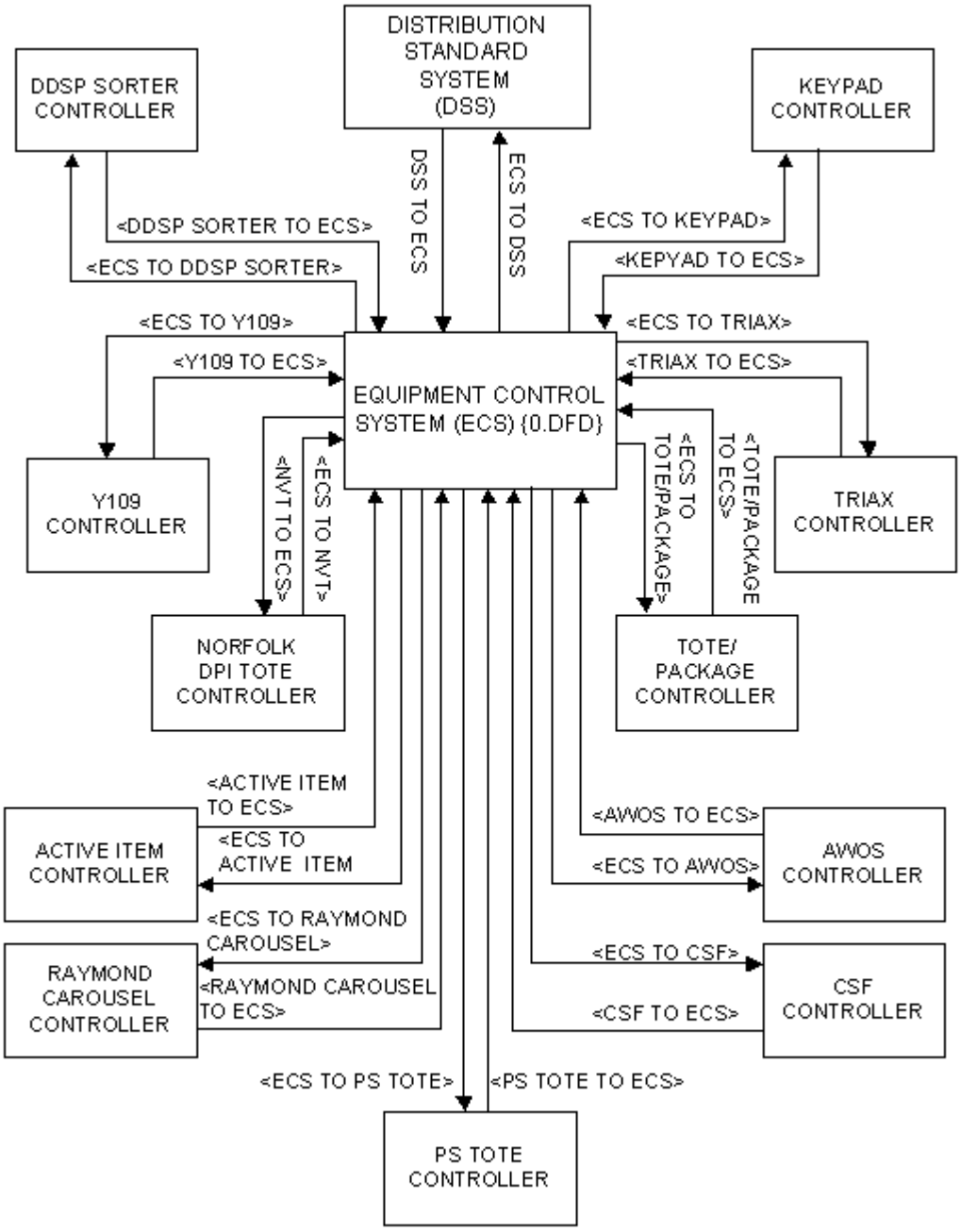

Process ID #	Date
ECS CONTEXT DIAGRAM Page 3 of 3	July 16, 2003
Requirement ID #(s)	
ALL	

Data Flow Diagram

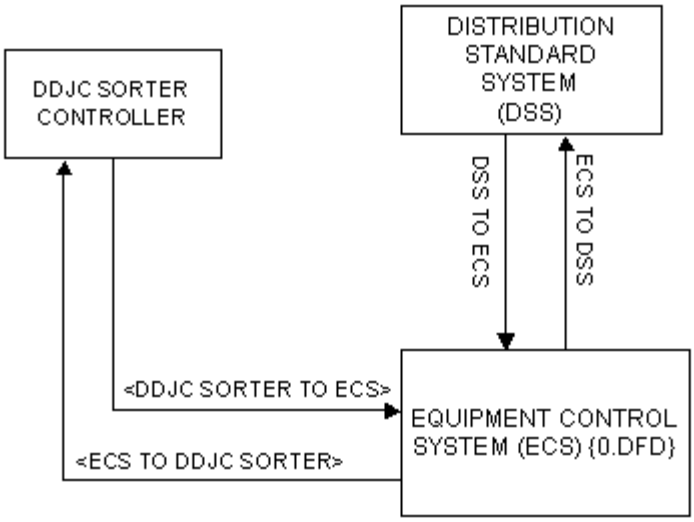

3.2.2 **0.DFD - ECS**

Process ID #	Date
0.DFD ECS Page 1 of 3	November 6, 1997

Requirement ID #(s)
ALL

Data Flow Diagram

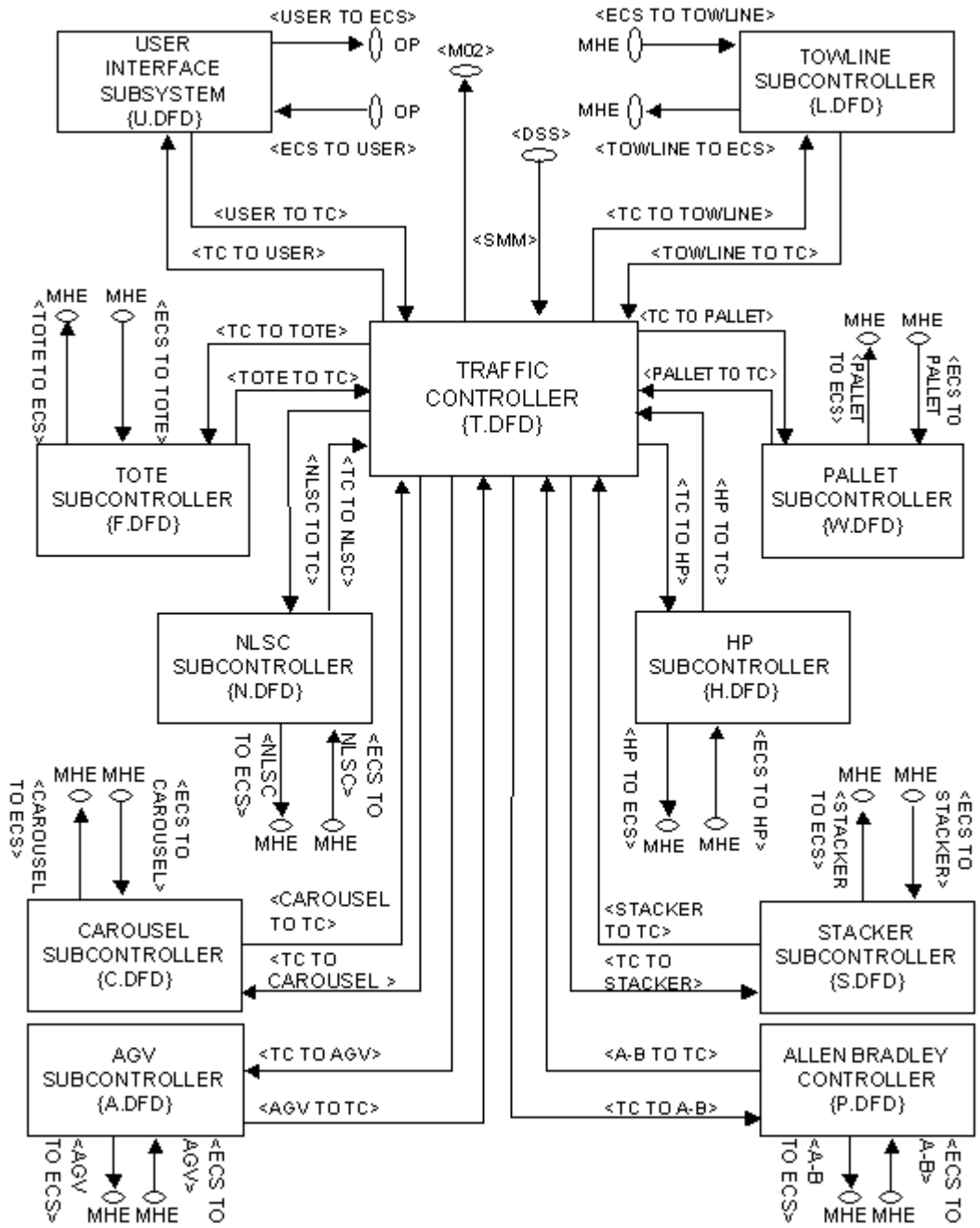

Process ID #	Date
0.DFD - ECS Page 2 of 3	November 6, 1997

Requirement ID #(s)
ALL

Data Flow Diagram

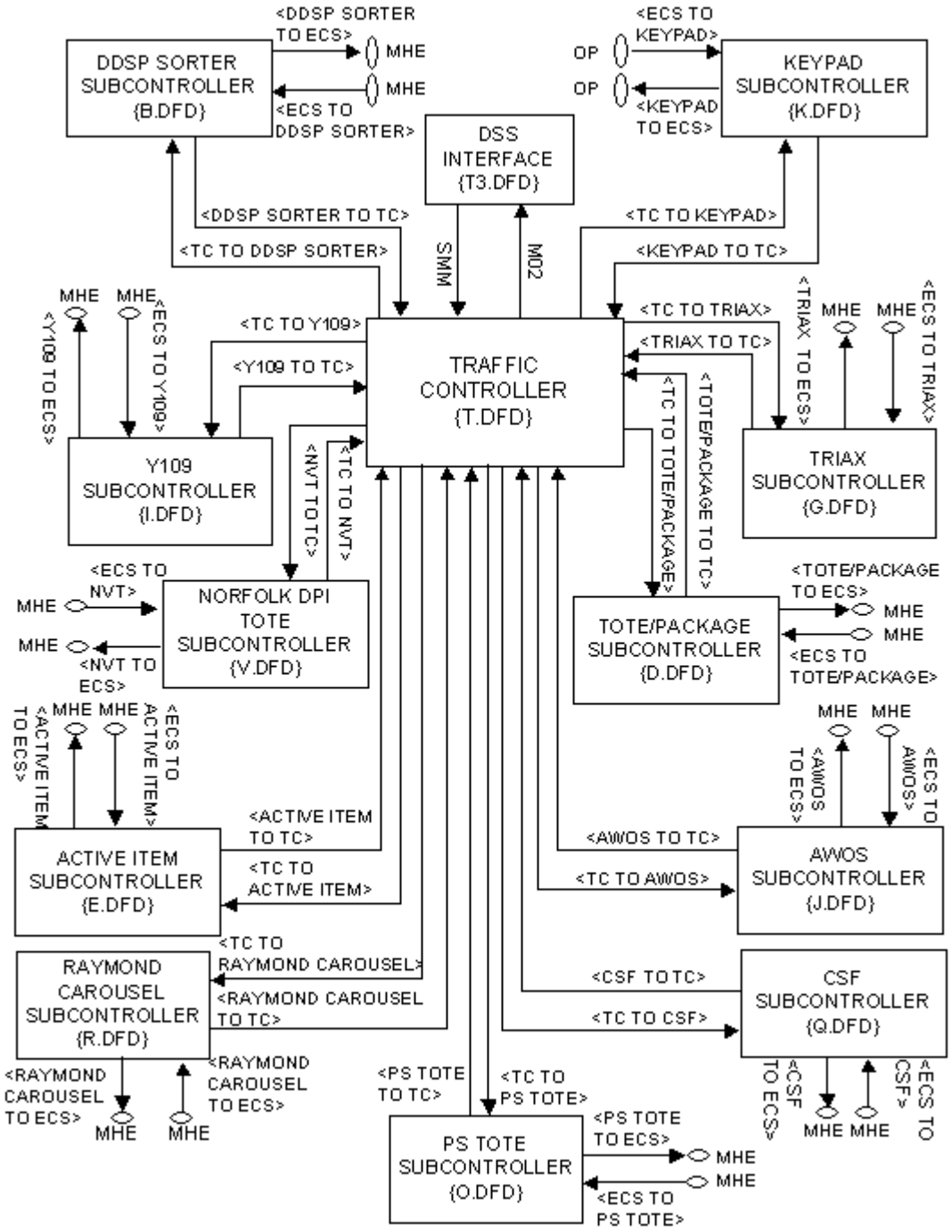

Process ID #	Date
0.DFD - ECS Page 2 of 3	July 14, 2003

Requirement ID #(s)
ALL

Data Flow Diagram

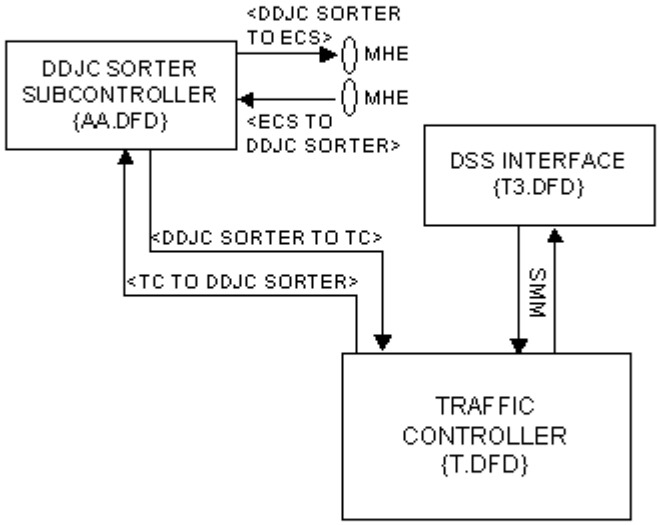

3.2.3 T.DFD

Process ID #	Date
T.DFD Traffic Subcontroller Page 1 of 3	September 26, 2000

Requirement ID #(s)
ALL

Data Flow Diagram

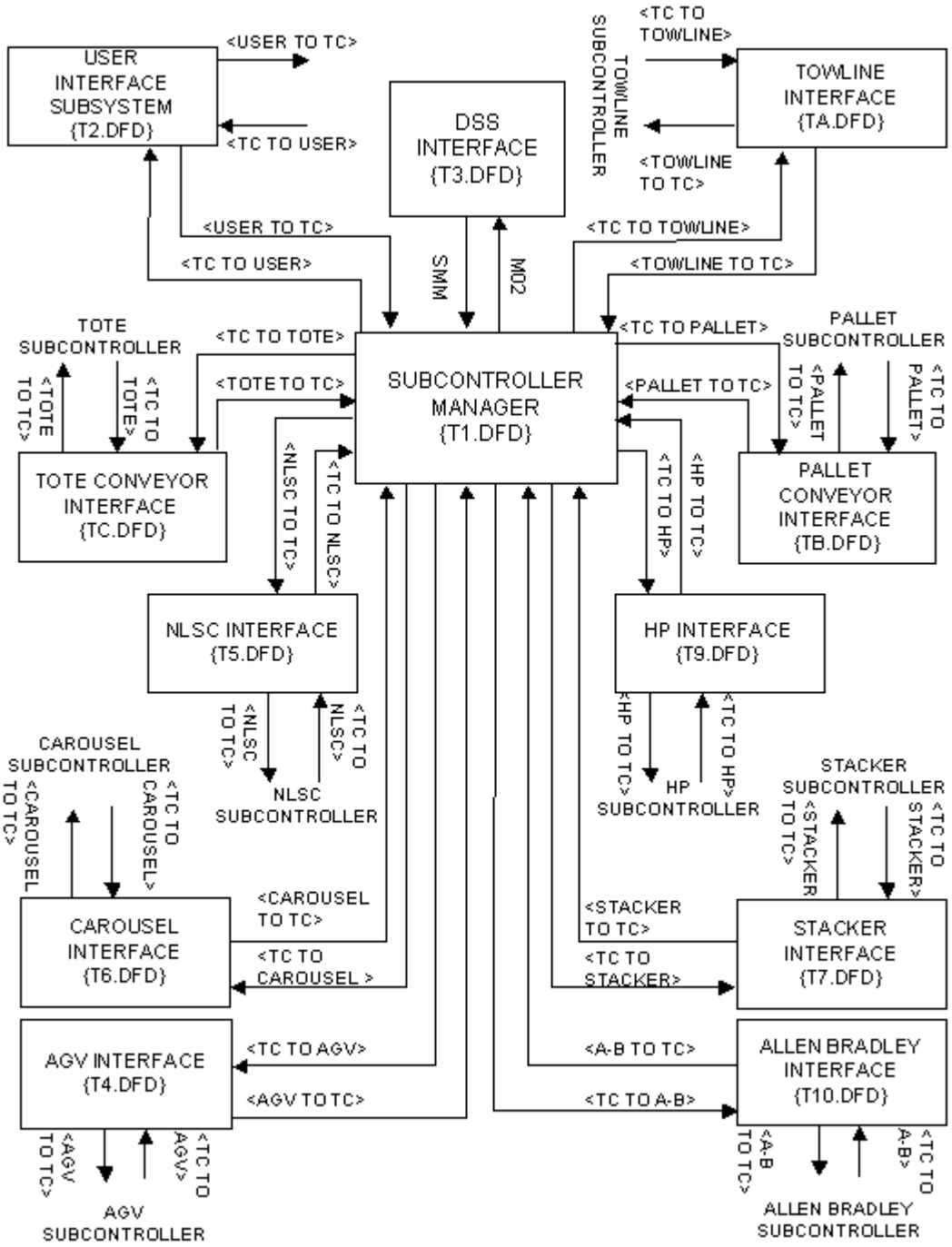

Process ID #	Date
T.DFD Traffic Subcontroller Page 2 of 3	November 6, 1997

Requirement ID #(s)
ALL

Data Flow Diagram

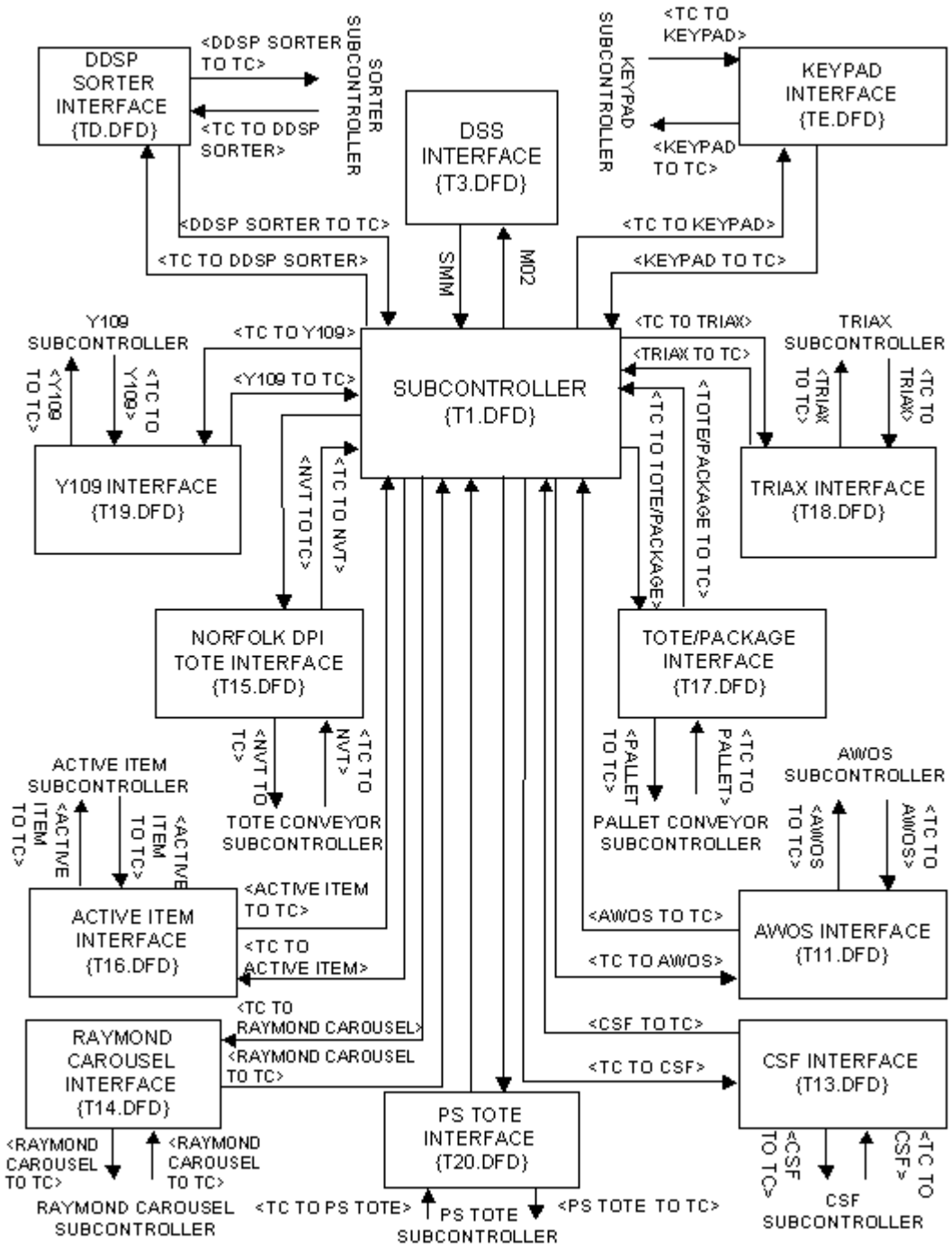

Process ID #	Date
T.DFD Traffic Subcontroller Page 3 of 3	July 16, 2003

Requirement ID #(s)
ALL

Data Flow Diagram

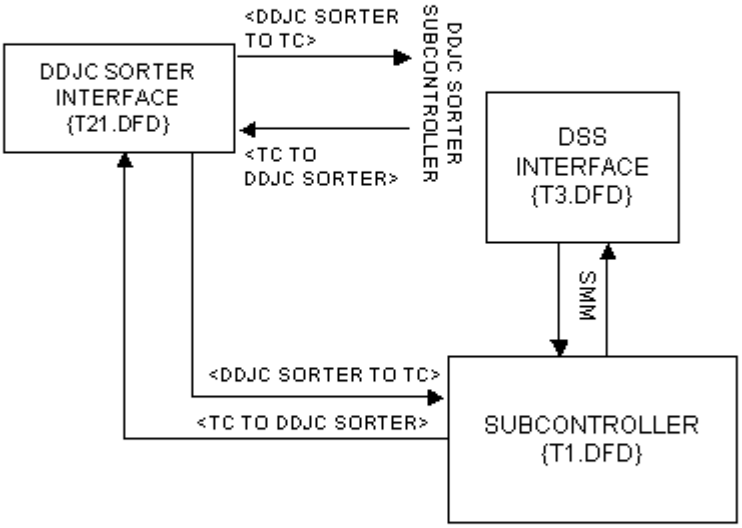

3.2.3.1 T1.DFD - Subcontroller Manager

Process ID #	Date
T1.DFD Subcontroller Manager Page 1 of 3	November 6, 1997

Requirement ID #(s)
SECS-RI1, SECS-RC1.1, SECS-RC1.2, SECS-RC1.3, SECS-RC3.1, SECS-RC5

Data Flow Diagram

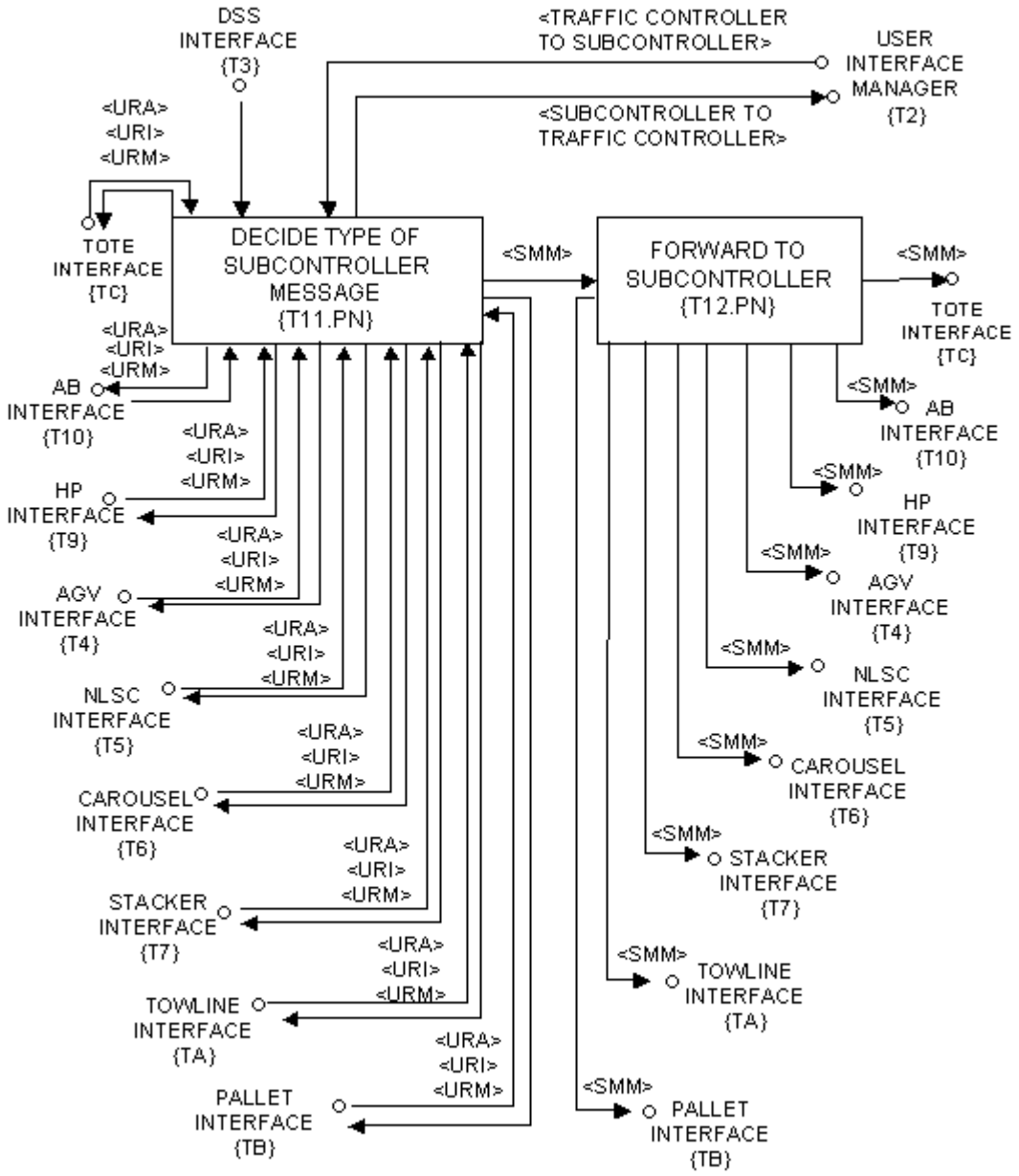

Process ID #	Date
T1.DFD - Subcontroller Manager Page 2 of 3	November 6, 1997

Requirement ID #(s)

SECS-RC1.1, SECS-RC1.1.9, SECS-RC1.1.10, SECS-RC1.2, SECS-RC1.3, SECS-RC1.4, SECS-RC2.11, SECS-RC3.1, SECS-RC5, SECS-RC12.4

Data Flow Diagram

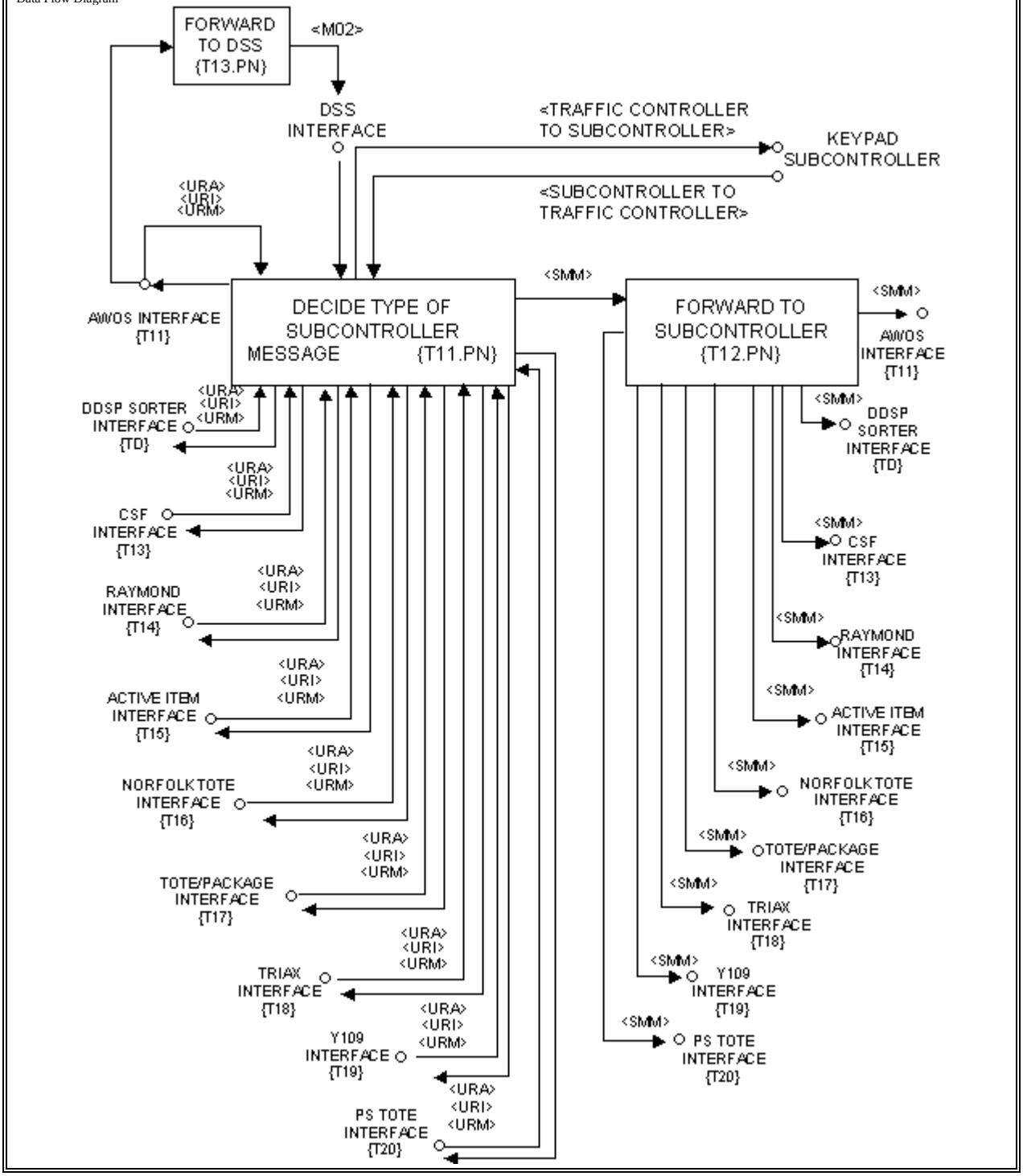

Process ID #	Date
T1.DFD - Subcontroller Manager Page 3 of 3	July 16, 2003

Requirement ID #(s)

SECS-RC1.1, SECS-RC1.1.9, SECS-RC1.1.10, SECS-RC1.2, SECS-RC1.3, SECS-RC1.4, SECS-RC2.11, SECS-RC3.1, SECS-RC5, SECS-RC12.4

Data Flow Diagram

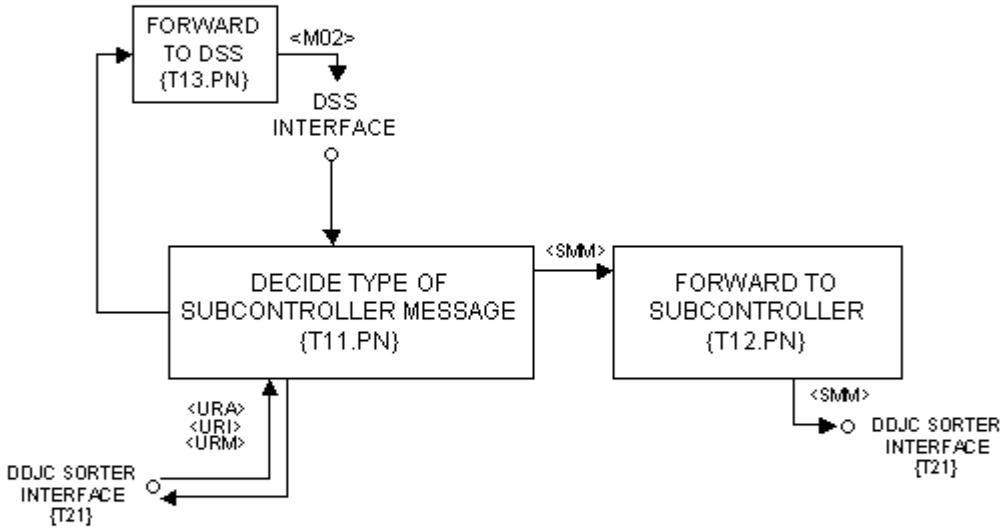

3.2.3.1.1 T11.PN - Decide Type of Subcontroller Message

Process Name	Process ID #	Date
Decide Type of Subcontroller Message	T11.PN	November 6, 1997

Requirement ID #(s)

SECS-RC1.1, SECS-RC1.1.9, SECS-RC1.1.10, SECS-RC1.2, SECS-RC1.3, SECS-RC1.4, SECS-RC2.11, SECS-RC3.1, SECS-RC5, SECS-RC12.4

Process Narrative

The Decide Type Of Subcontroller Message (T11.PN) process retrieves SMM transactions from the DSS Interface (T3.DFD) and passes the transaction to the Forward To Subcontroller (T12.PN) module. This process also retrieves Traffic Controller to Subcontroller transactions from the User Interface (U.DFD) and Keypad Interface (K.DFD) and passes them to the appropriate subcontroller interface.

3.2.3.1.2 **T12.PN - Forward to Subcontroller**

Process Name	Process ID #	Date
Forward to Subcontroller	T12.PN	November 6, 1997

Requirements ID #(s)
SECS-RC1.1, SECS-RC1.2, SECS-RC1.3, SECS-RC3.1, SECS-RC5

Process Narrative

The Forward to Subcontroller module accepts SMM transactions from the Decide Type of Subcontroller Message process and, through a series of table lookups, determines which subcontroller(s) shall receive the message. In some cases, the message may not pertain to any subcontroller and will be discarded.

3.2.3.1.3 **T13.PN - Forward to DSS**

Process Name	Process ID #	Date
Forward to DSS	T13.PN	April 21, 1999

Requirements ID #(s)
SECS-RC1.1.17, SECS-RI20, SECS-RI21, SECS-RI22, SECS-RI23, SECS-RI24

Process Narrative

The Forward to DSS module accepts M02 transactions form the Subcontroller and forwards the message to the Upper Tier of DSS.

3.2.3.2 **T2.DFD**

Process ID #	Date
T2.DFD	November 6, 1997

Requirement ID #(s)

SECS-RC2.1, SECS-RC2.2, SECS-RC2.4, SECS-RC2.5, SECS-RC2.6, SECS-RC2.7, SECS-RC3.2, SECS-RC3.3

Data Flow Diagram

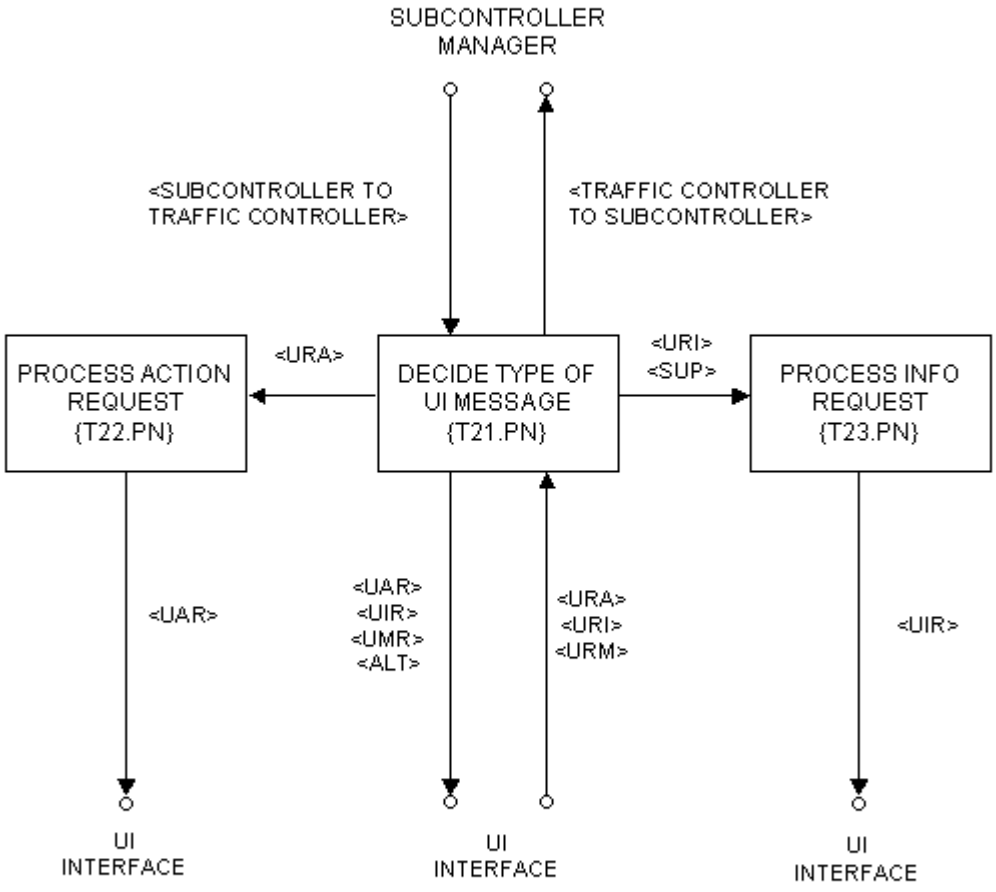

3.2.3.2.1 T21.PN - Decide Type of UI Message

Process Name	Process ID #	Date
Decide Type of UI Message	T21.PN	November 6, 1997

Requirements ID #(s)
SECS-RC2.1, SECS-RC2.6, SECS-RC3.2

Process Narrative

The Decide Type of UI Message process retrieves messages from the UI Interface and determines if the message pertains to the Traffic Controller or a subcontroller. If the message pertains to the Traffic Controller, it is passed to Process Action Request or Process Info Request based on the nature of the message. If the message pertains to a subcontroller, it is passed to the Subcontroller Manager.

This process also accepts messages from the Subcontroller Manager. These messages are sent to Process Info Request if they pertain to the Traffic Controller, otherwise they are forwarded to the UI Interface.

3.2.3.2.2 **T22.PN - Process Action Request**

Process Name	Process ID #	Date
Process Action Request	T22.PN	November 6, 1997

Requirements ID #(s)
SECS-RC2.1, SECS-RC2.5, SECS-RC2.6, SECS-RC2.7

Process Narrative

Process Action Request accepts URA (User Request for Action) transactions from Decide Type of UI Message and performs the requested action as outlined in the message. A UAR (User Action Response) transaction indicating the success or failure of the URA is then formatted, if needed, and sent to the UI Interface.

3.2.3.2.3 **T23.PN - Process Info Request**

Process Name	Process ID #	Date
Process Info Request	T23.PN	November 6, 1997

Requirements ID #(s)
SECS-RC2.1, SECS-RC2.2, SECS-RC2.4, SECS-RC3.2, SECS-RC3.3

Process Narrative

Process Info Request accepts URI (User Request for Information) transactions from Decide Type of UI Message and sends the information requested in a UIR (User Information Response) transaction to the UI Interface.

This process also accepts SUP (Subcontroller Update) transactions from Decide Type of UI Message and performs the information update required.

3.2.3.3 T3.DFD

Process ID #	Date
T3.DFD	November 6, 1997

Requirement ID #(s)
SECS-RI1, SECS-RC1.1, SECS-RC2.5, SECS-RC4.2, SECS-RC4.3

Data Flow Diagram

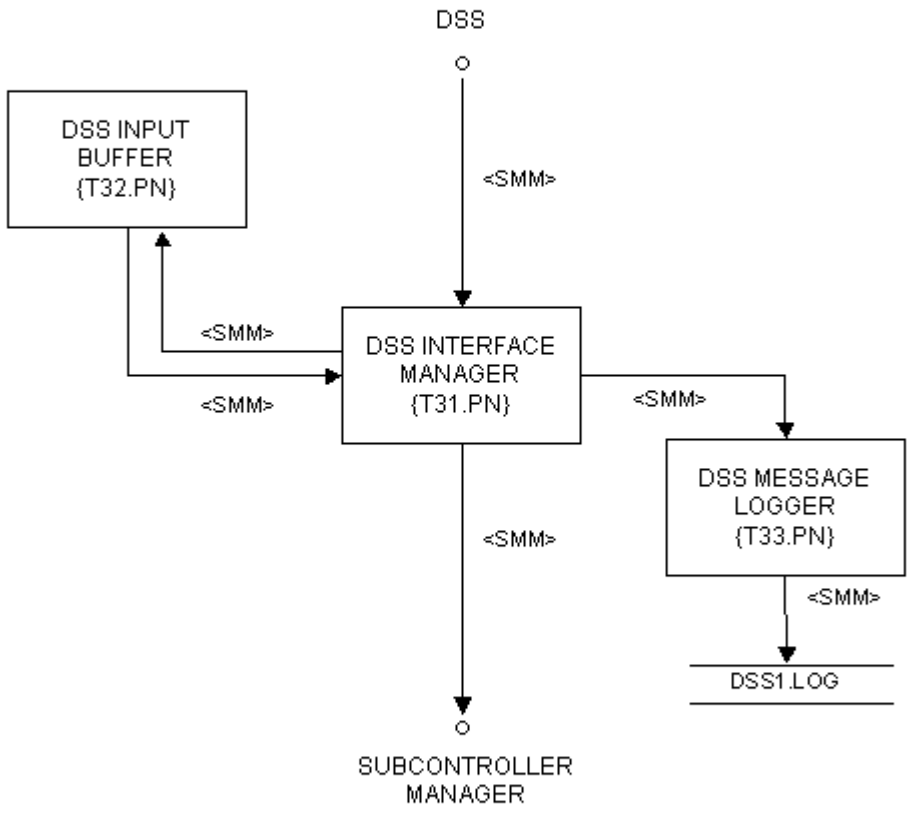

3.2.3.3.1 T31.PN - DSS Interface Manager

Process Name	Process ID #	Date
DSS Interface Manager	T31.PN	November 6, 1997

Requirements ID #(s)
SECS-RI1, SECS-RC1.1, SECS-RC4.2, SECS-RC4.3

Process Narrative

The DSS Interface Manager monitors the LU6.2 card for incoming SMM (Standard Movement Message) transactions from DSS and retrieves them upon arrival. If logging is turned on, the SMM is sent to the DSS Message Logger. The SMM is then sent to the DSS Input Buffer. When an SMM is requested by the Subcontroller Manager, an SMM is retrieved from the DSS Input Buffer and forwarded to the Subcontroller Manager.

3.2.3.3.2 T32.PN - DSS Input Buffer

Process Name	Process ID #	Date
DSS Input Buffer	T32.PN	November 6, 1997

Requirements ID #(s)
SECS-RC4.2

Process Narrative

The DSS Input Buffer accepts SMM (Standard Movement Message) transactions from the DSS Interface Manager and places them in a RAM queue. When a new SMM is requested by the DSS Interface Manager, the oldest SMM in the queue is removed and sent to the DSS Interface Manager.

3.2.3.3.3 T33.PN - DSS Message Logger

Process Name	Process ID #	Date
DSS Message Logger	T33.PN	November 6, 1997

Requirements ID #(s)
SECS-RC2.5, SECS-RC4.3

Process Narrative

The DSS Message Logger accepts SMM (Standard Movement Message) transactions from the DSS Interface Manager and writes them to a disk file.

3.2.3.4 **T4.DFD**

Process ID #	Date
T4.DFD	October 20, 1995

Requirement ID #(s)
SECS-RI1, SECS-RC1.1, SECS-RC2.5, SECS-RC4.2, SECS-RC4.3

Data Flow Diagram

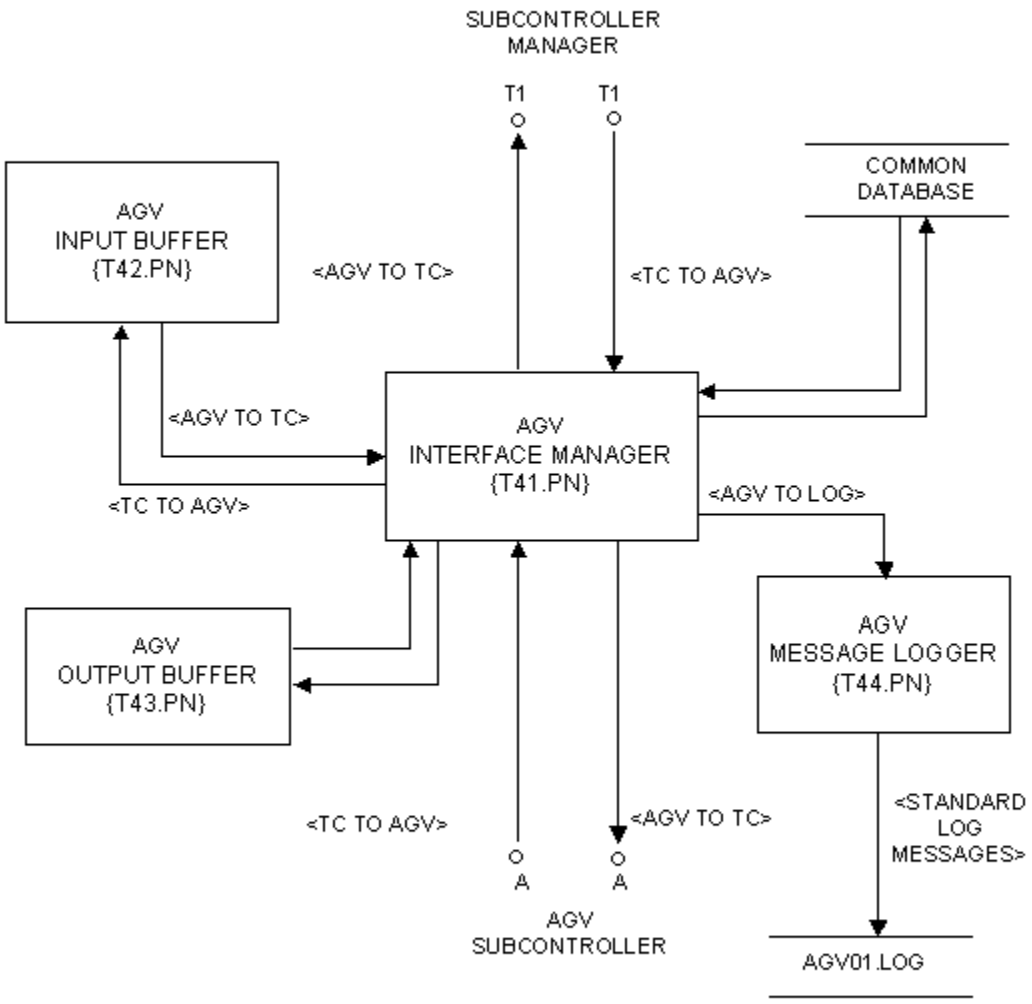

3.2.3.4.1 T41.PN - AGV Interface Manager

Process Name	Process ID #	Date
AGV Interface Manager	T41.PN	October 20, 1995

Requirements ID #(s)
SECS-RI8, SECS-RC1.1, SECS-RC4.2, SECS-RC4.3

Process Narrative

The AGV Interface Manager accepts transactions from the Subcontroller Manager and passes them to the AGV Output Buffer for storage. If logging is turned on, the transaction is sent to the AGV Message Logger. It then retrieves a stored transaction from the AGV Output Buffer and attempts to forward it to the AGV Subcontroller. If the transmission is successful, further messages are accepted from the AGV Output Buffer and sent until the buffer is empty. If a transmission is unsuccessful, an ALT (Alert) message is sent to the Subcontroller Manager.

The AGV Interface Manager also accepts transactions from the AGV Subcontroller and passes them to the AGV Input Buffer for storage. If logging is turned on, the transaction is sent to the AGV Message Logger. When a message is requested by the Subcontroller Manager, a transaction is retrieved from the AGV Input Buffer and returned to the Subcontroller Manager.

3.2.3.4.2 **T42.PN - AGV Input Buffer**

Process Name	Process ID #	Date
AGV Input Buffer	T42.PN	October 20, 1995

Requirements ID #(s)
SECS-RC4.2

Process Narrative

The AGV Input Buffer accepts messages from the AGV Interface Manager and places them in a RAM queue. When a message is requested by the AGV Interface Manager, the oldest message in the queue is removed and sent to the AGV Interface Manager.

3.2.3.4.3 **T43.PN - AGV Output Buffer**

Process Name	Process ID #	Date
AGV Output Buffer	T43.PN	October 20, 1995

Requirements ID #(s)
SECS-RC4.2

Process Narrative

The AGV Output Buffer accepts messages from the AGV Interface Manager and places them in a RAM queue. When a message is requested by the AGV Interface Manager, the oldest message in the queue is removed and sent to the AGV Interface Manager.

3.2.3.4.4 T44.PN - AGV Message Logger

Process Name	Process ID #	Date
AGV Message Logger	T44.PN	October 20, 1995

Requirements ID #(s)
SECS-RC2.5, SECS-RC4.3

Process Narrative

The AGV Message Logger accepts messages from the AGV Interface Manager and writes them to a disk file.

3.2.3.5 **T5.DFD**

Process ID #	Date
T5.DFD	October 20, 1995

Requirement ID #(s)

SECS-RI8, SECS-RC1.1, SECS-RC2.5, SECS-RC4.2, SECS-RC4.3

Data Flow Diagram

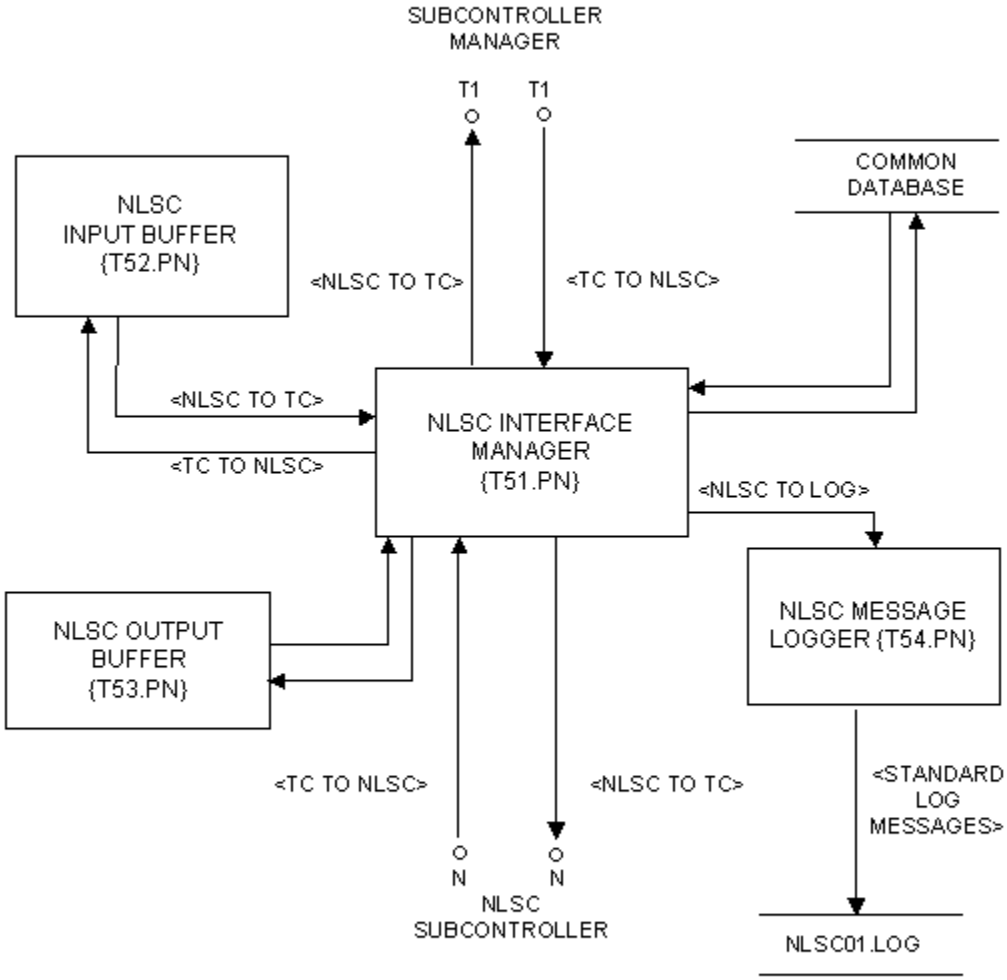

3.2.3.5.1 T51.PN - NLSC Interface Manager

Process Name	Process ID #	Date
NLSC Interface Manager	T51.PN	October 20, 1995

Requirements ID #(s)
SECS-RI2, SECS-RC1.1, SECS-RC4.2, SECS-RC4.3

Process Narrative

The NLSC Interface Manager accepts transactions from the Subcontroller Manager and passes them to the NLSC Output Buffer for storage. If logging is turned on, the transaction is sent to the NLSC Message Logger. It then retrieves a stored transaction from the NLSC Output Buffer and attempts to forward it to the NLSC Subcontroller. If the transmission is successful, further messages are accepted from the NLSC Output Buffer and sent until the buffer is empty. If a transmission is unsuccessful, an ALT (Alert) message is sent to the Subcontroller Manager.

The NLSC Interface Manager also accepts transactions from the NLSC Subcontroller and passes them to the NLSC Input Buffer for storage. If logging is turned on, the transaction is sent to the NLSC Message Logger. When a message is requested by the Subcontroller Manager, a transaction is retrieved from the NLSC Input Buffer and returned to the Subcontroller Manager.

3.2.3.5.2 T52.PN - NLSC Input Buffer

Process Name	Process ID #	Date
NLSC Input Buffer	T52.PN	October 20, 1995

Requirements ID #(s)
SECS-RC4.2

Process Narrative

The NLSC Input Buffer accepts messages from the NLSC Interface Manager process and places them in a RAM queue. When a message is requested by the NLSC Interface Manager, the oldest message in the queue is removed and sent to the NLSC Interface Manager.

3.2.3.5.3 T53.PN - NLSC Output Buffer

Process Name	Process ID #	Date
NLSC Output Buffer	T53.PN	October 20, 1995
Requirements ID #(s)		
SECS-RC4.2		

Process Narrative

The NLSC Output Buffer accepts messages from the NLSC Interface Manager and places them in a RAM queue. When a message is requested by the NLSC Interface Manager, the oldest message in the queue is removed and sent to the NLSC Interface Manager.

3.2.3.5.4 T54.PN - NLSC Message Logger

Process Name	Process ID #	Date
NLSC Message Logger	T54.PN	October 20, 1995
Requirements ID #(s)		
SECS-RC2.5, SECS-RC4.3		

Process Narrative

The NLSC Message Logger accepts messages from the NLSC Interface Manager process and writes them to a disk file.

3.2.3.6 **T6.DFD**

Process ID #	Date
T6.DFD	October 20, 1995

Requirement ID #(s)
SECS-RI2, SECS-RC1.1, SECS-RC2.5, SECS-RC4.2, SECS-RC4.3

Data Flow Diagram

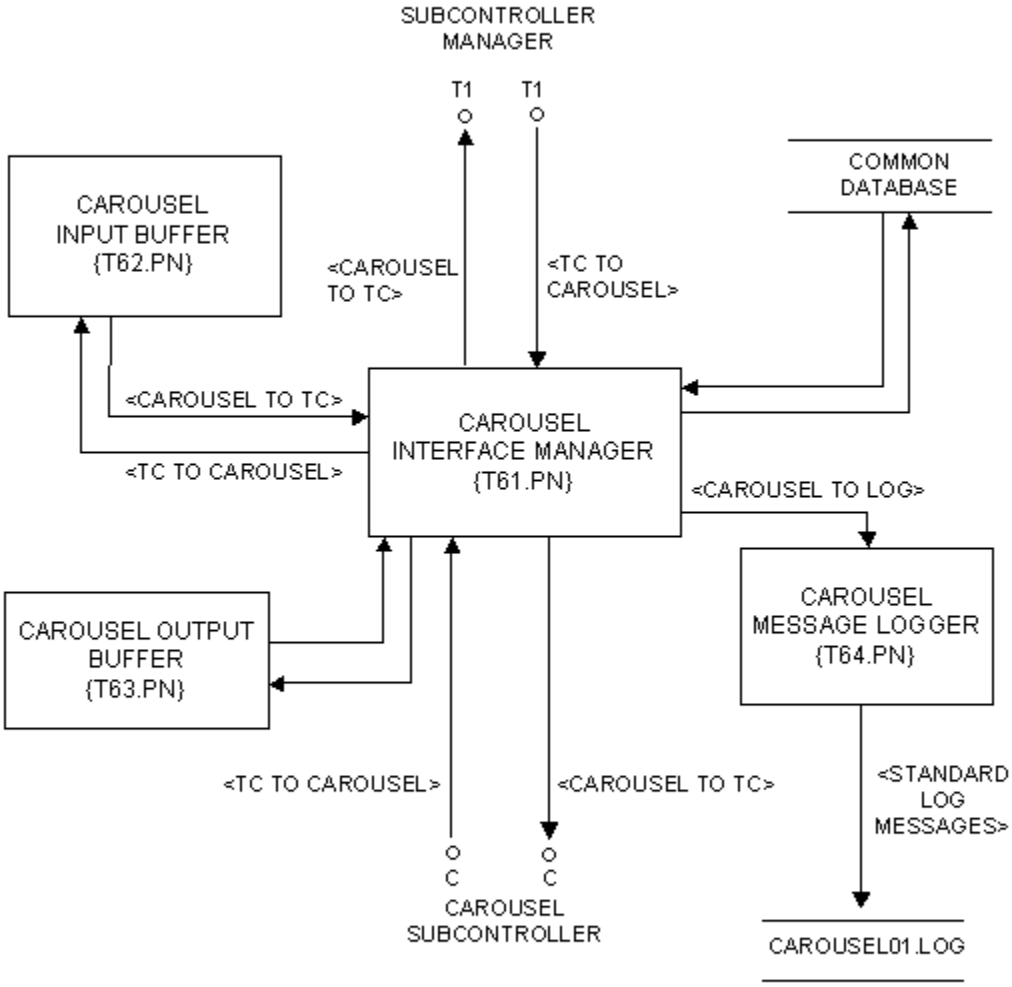

3.2.3.6.1 T61.PN - Carousel Interface Manager

Process Name	Process ID #	Date
Carousel Interface Manager	T61.PN	October 20, 1995

Requirements ID #(s)
SECS-RI5, SECS-RC1.1, SECS-RC4.2, SECS-RC4.3

Process Narrative

The Carousel Interface Manager accepts transactions from the Subcontroller Manager and passes them to the Carousel Output Buffer for storage. If logging is turned on, the transaction is sent to the Carousel Message Logger. It then retrieves a stored transaction from the Carousel Output Buffer and attempts to forward it to the Carousel Subcontroller. If the transmission is successful, further messages are accepted from the Carousel Output Buffer and sent until the buffer is empty. If a transmission is unsuccessful, an ALT (Alert) message is sent to the Subcontroller Manager.

The Carousel Interface Manager also accepts transactions from the Carousel Subcontroller and passes them to the Carousel Input Buffer for storage. If logging is turned on, the transaction is sent to the Carousel Message Logger. When a message is requested by the Subcontroller Manager, a transaction is retrieved from the Carousel Input Buffer and returned to the Subcontroller Manager.

3.2.3.6.2 T62.PN - Carousel Input Buffer

Process Name	Process ID #	Date
Carousel Input Buffer	T62.PN	October 20, 1995

Requirements ID #(s)
SECS-RC4.2

Process Narrative

The Carousel Input Buffer accepts messages from the Carousel Interface Manager and places them in a RAM queue. When a message is requested by the Carousel Interface Manager, the oldest message in the queue is removed and sent to the Carousel Interface Manager.

3.2.3.6.3 **T63.PN - Carousel Output Buffer**

Process Name	Process ID #	Date
Carousel Output Buffer	T63.PN	October 20, 1995

Requirements ID #(s)
SECS-RC4.2

Process Narrative

The Carousel Output Buffer accepts messages from the Carousel Interface Manager and places them in a RAM queue. When a message is requested by the Carousel Interface Manager, the oldest message in the queue is removed and sent to the Carousel Interface Manager.

3.2.3.6.4 T64.PN - Carousel Message Logger

Process Name	Process ID #	Date
Carousel Message Logger	T64.PN	October 20, 1995

Requirements ID #(s)
SECS-RC2.5, SECS-RC4.3

Process Narrative

The Carousel Message Logger accepts messages from the Carousel Interface Manager process and writes them to a disk file.

3.2.3.7 **T7.DFD**

Process ID #	Date
T7.DFD	October 20, 1995

Requirement ID #(s)

SECS-RI5, SECS-RC1.1, SECS-RC2.5, SECS-RC4.2, SECS-RC4.3

Data Flow Diagram

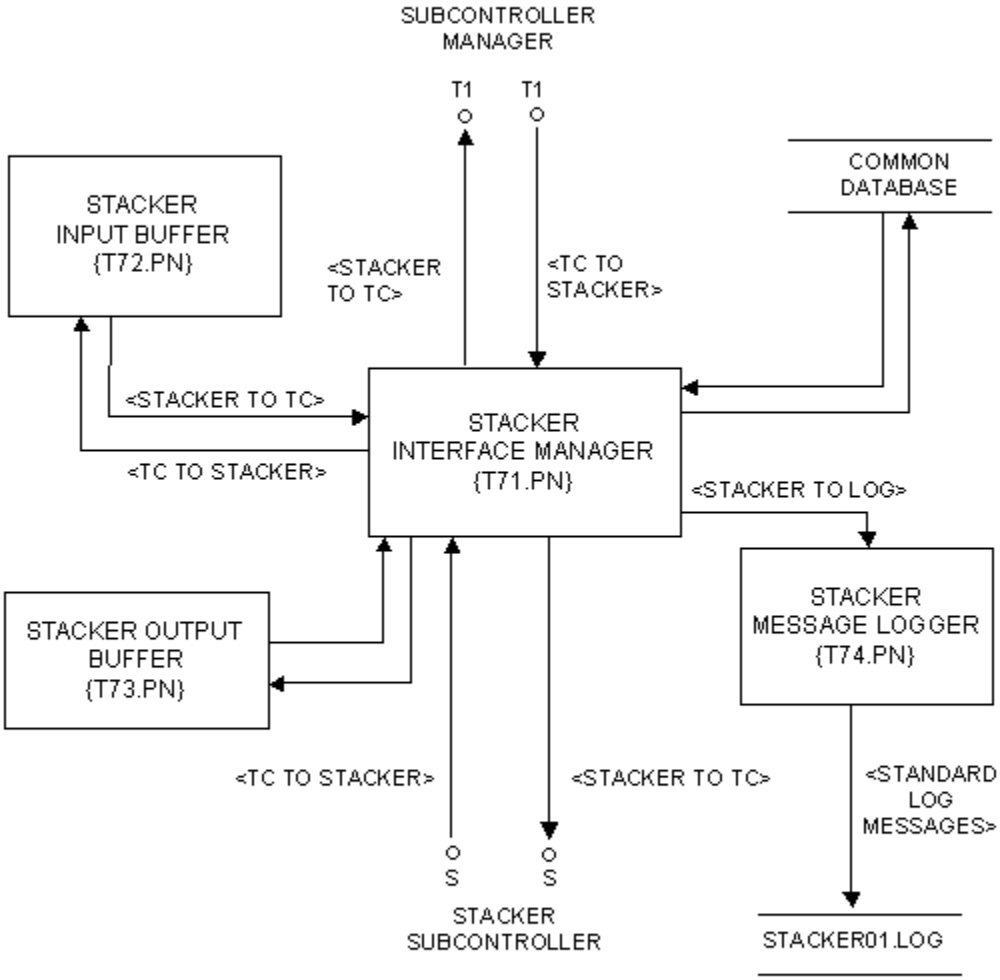

3.2.3.7.1 T71.PN - Stacker Interface Manager

Process Name	Process ID #	Date
Stacker Interface Manager	T71.PN	October 20, 1995

Requirements ID #(s)

SECS-RI3, SECS-RI4, SECS-RI7, SECS-RC1.1, SECS-RC2.4, SECS-RC4.2, SECS-RC4.3

Process Narrative

The Stacker Interface Manager accepts transactions from the Subcontroller Manager and passes them to the Stacker Output Buffer or Pick Queue for storage. If logging is turned on, the transaction is sent to the Stacker Message Logger. It then retrieves a stored transaction from the Stacker Output Buffer or Pick Queue and attempts to forward it to the Stacker Subcontroller. If the transmission is successful, further messages are accepted from the Stacker Output Buffer or Pick Queue and sent until the buffer or queue is empty. If a transmission is unsuccessful, an ALT (Alert) message is sent to the Subcontroller Manager.

The Stacker Interface Manager also accepts transactions from the Stacker Subcontroller and passes them to the Stacker Input Buffer for storage. If logging is turned on, the transaction is sent to the Stacker Message Logger. When a message is requested by the Subcontroller Manager, a transaction is retrieved from the Stacker Input Buffer and returned to the Subcontroller Manager.

3.2.3.7.2 T72.PN - Stacker Input Buffer

Process Name	Process ID #	Date
Stacker Input Buffer	T72.PN	October 20, 1995

Requirements ID #(s)
SECS-RC4.2

Process Narrative

The Stacker Input Buffer accepts messages from the Stacker Interface Manager and places them in a RAM queue. When a message is requested by the Stacker Interface Manager, the oldest message in the queue is removed and sent to the Stacker Interface Manager.

3.2.3.7.3 T73.PN - Stacker Output Buffer

Process Name	Process ID #	Date
Stacker Output Buffer	T73.PN	October 20, 1995

Requirements ID #(s)
SECS-RC4.2

Process Narrative

The Stacker Output Buffer accepts messages from the Stacker Interface Manager and places them in a RAM queue. When a message is requested by the Stacker Interface Manager, the oldest message in the queue is removed and sent to the Stacker Interface Manager.

3.2.3.7.4 T74.PN - Stacker Message Logger

Process Name	Process ID #	Date
Stacker Message Logger	T74.PN	October 20, 1995

Requirements ID #(s)
SECS-RC2.5, SECS-RC4.3

Process Narrative

The Stacker Message Logger accepts messages from the Stacker Interface Manager and writes them to a disk file.

3.2.3.8 **T8.DFD**

Process ID #	Date
T8.DFD	October 20, 1995

Requirement ID #(s)

SECS-RI3, SECS-RI4, SECS-RI7, SECS-RC1.1, SECS-RC2.5, SECS-RC4.2, SECS-RC4.3

Data Flow Diagram

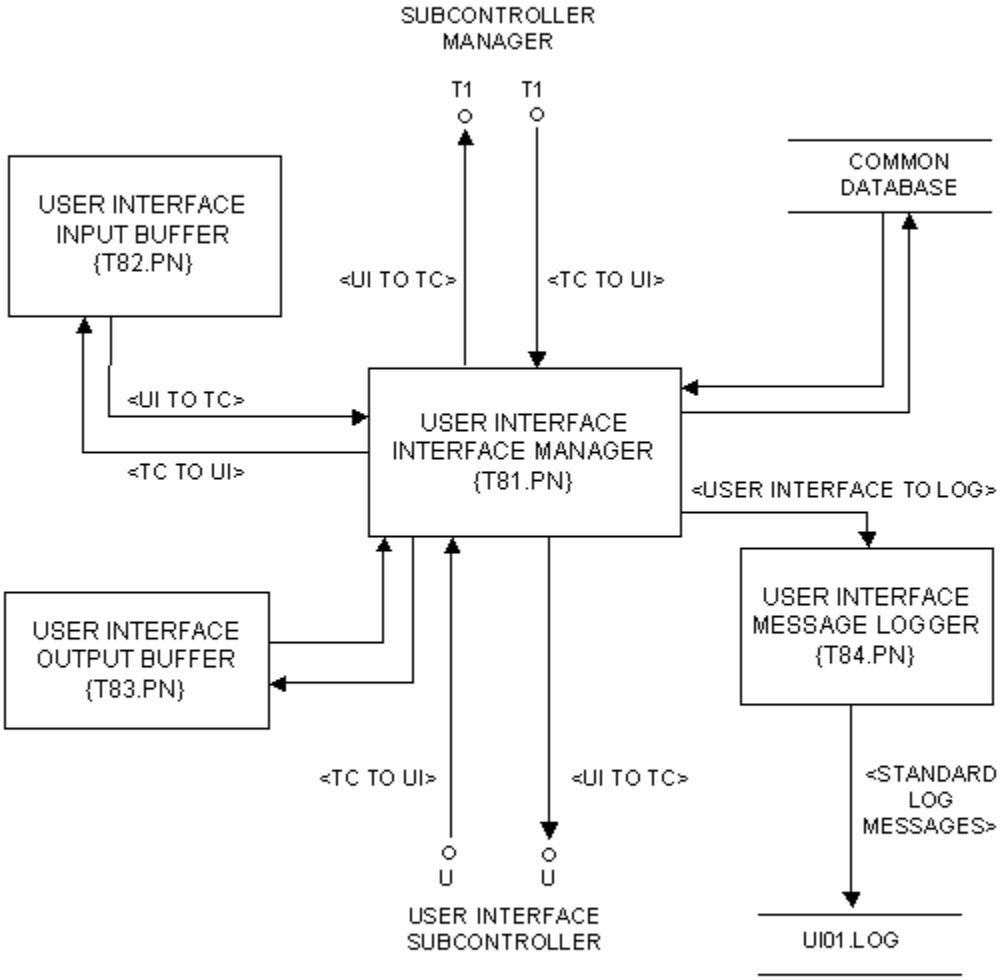

3.2.3.8.1 T81.PN - UI Interface Manager

Process Name	Process ID #	Date
UI Interface Manager	T81.PN	October 20, 1995

Requirements ID #(s)
SECS-RC2.1, SECS-RC3.2, SECS-RC4.2, SECS-RC4.3

Process Narrative

The UI Interface Manager accepts transactions from the Subcontroller Manager and passes them to the UI Output Buffer for storage. If logging is turned on, the transaction is sent to the UI Message Logger. It then retrieves a stored transaction from the UI Output Buffer and attempts to forward it to the UI Subcontroller. If the transmission is successful, further messages are accepted from the UI Output Buffer and sent until the buffer is empty. If a transmission is unsuccessful, an ALT (Alert) message is sent to the Subcontroller Manager.

The UI Interface Manager also accepts transactions from the UI Subcontroller and passes them to the UI Input Buffer for storage. If logging is turned on, the transaction is sent to the UI Message Logger. When a message is requested by the Subcontroller Manager, a transaction is retrieved from the UI Input Buffer and returned to the Subcontroller Manager.

3.2.3.8.2 **T82.PN - UI Input Buffer**

Process Name	Process ID #	Date
UI Input Buffer	T82.PN	October 20, 1995

Requirements ID #(s)
SECS-RC4.2

Process Narrative

The UI Input Buffer accepts messages from the UI Interface Manager and places them in a RAM queue. When a message is requested by the UI Interface Manager, the oldest message in the queue is removed and sent to the UI Interface Manager.

3.2.3.8.3 **T83.PN - UI Output Buffer**

Process Name	Process ID #	Date
UI Output Buffer	T83.PN	October 20, 1995

Requirements ID #(s)
SECS-RC4.2

Process Narrative

The UI Output Buffer accepts messages from the UI Interface Manager and places them in a RAM queue. When a message is requested by the UI Interface Manager, the oldest message in the queue is removed and sent to the UI Interface Manager.

3.2.3.8.4 T84.PN - UI Message Logger

Process Name	Process ID #	Date
UI Message Logger	T84.PN	October 20, 1995

Requirements ID #(s)
SECS-RC2.5, SECS-RC4.3

Process Narrative

The UI Message Logger accepts messages from the UI Interface Manager and writes them to a disk file.

3.2.3.9 **T9.DFD**

Process ID #	Date
T9.DFD	October 20, 1995

Requirement ID #(s)

SECS-RC2.1, SECS-RC2.5, SECS-RC3.2, SECS-RC4.2, SECS-RC4.3

Data Flow Diagram

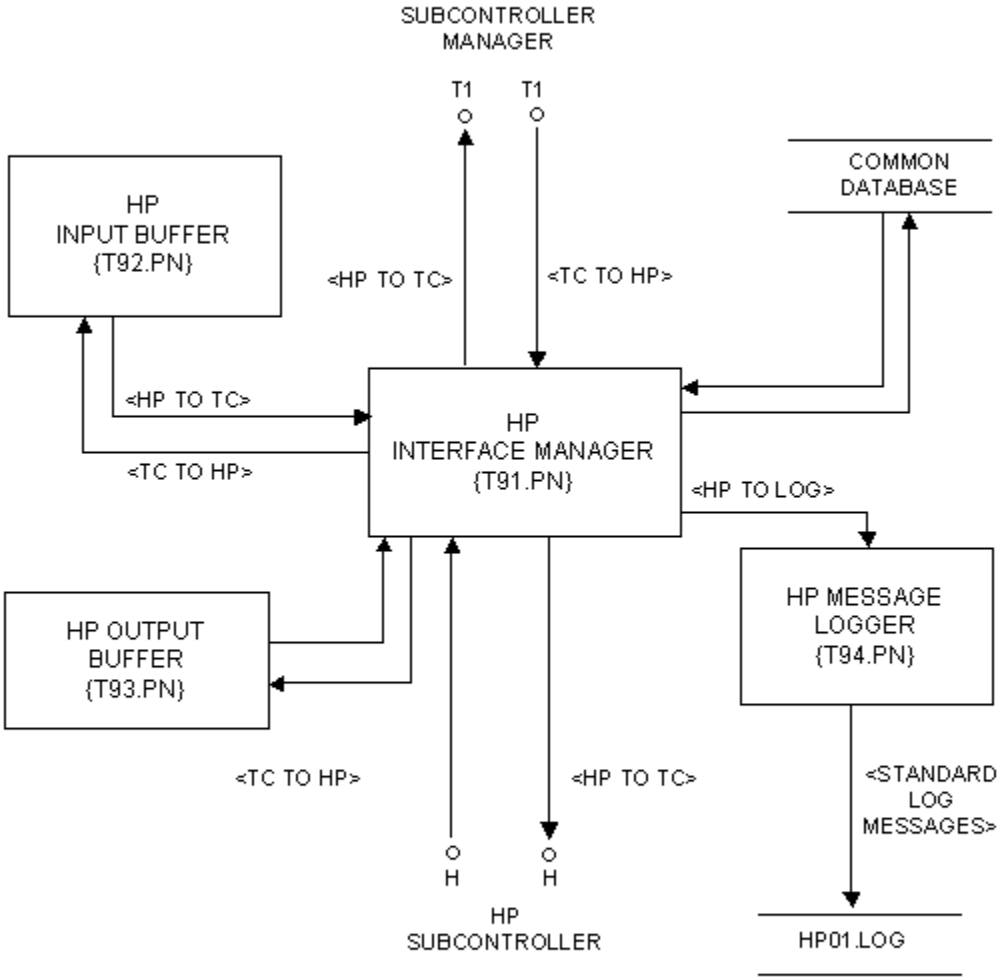

3.2.3.9.1 T91.PN - HP Interface Manager

Process Name	Process ID #	Date
HP Interface Manager	T91.PN	November 1, 1996

Requirements ID #(s)
SECS-RI13, SECS-RC1.1, SECS-RC1.1.8, SECS-RC4.2, SECS-RC4.3

Process Narrative

The HP Interface Manager accepts transactions from the Subcontroller Manager. Single tote transactions are immediately sent to the HP Output Buffer for storage. Messages concerning tote chains are accumulated and sent to the HP Output Buffer sequentially. If logging is turned on, the output transaction is sent to the HP Message Logger. It then retrieves a stored transaction from the HP Output Buffer and attempts to forward it to the HP Subcontroller via the Interface Manager. If the transmission is successful, further messages are accepted from the HP Output Buffer and sent until the buffer is empty. If a transmission is unsuccessful, retransmission is attempted.

The HP Interface Manager also accepts transactions from the HP Subcontroller and passes them to the HP Input Buffer for storage. If logging is turned on, the transaction is sent to the HP Message Logger. When a message is requested by the Subcontroller Manager, a transaction is retrieved from the HP Input Buffer and returned to the Subcontroller Manager.

3.2.3.9.2 T92.PN - HP Input Buffer

Process Name	Process ID #	Date
HP Input Buffer	T92.PN	November 1, 1996

Requirements ID #(s)
SECS-RC4.2

Process Narrative

The HP Input Buffer accepts messages from the HP Interface Manager process and places them in a RAM queue. When a message is requested by the HP Interface Manager, the oldest message in the queue is removed and sent to the HP Interface Manager.

3.2.3.9.3 **T93.PN - HP Output Buffer**

Process Name	Process ID #	Date
HP Output Buffer	T93.PN	November 1, 1996
Requirements ID #(s)		
SECS-RC4.2		

Process Narrative

The HP Output Buffer accepts messages from the HP Interface Manager and places them in a RAM queue. When a message is requested by the HP Interface Manager, the oldest message in the queue is removed and sent to the HP Interface Manager.

3.2.3.9.4 T94.PN - HP Message Logger

Process Name	Process ID #	Date
HP Message Logger	T94.PN	November 1, 1996

Requirements ID #(s)
SECS-RC4.3

Process Narrative

The HP Message Logger accepts messages from the HP Interface Manager process and writes them to a disk file.

3.2.3.10 **T10.DFD**

Process ID #	Date
T10.DFD	November 1, 1996

Requirement ID #(s)

SECS-RI13, SECS-RC1.1, SECS-RC1.1.8, , SECS-RC4.2, SECS-RC4.3

Data Flow Diagram

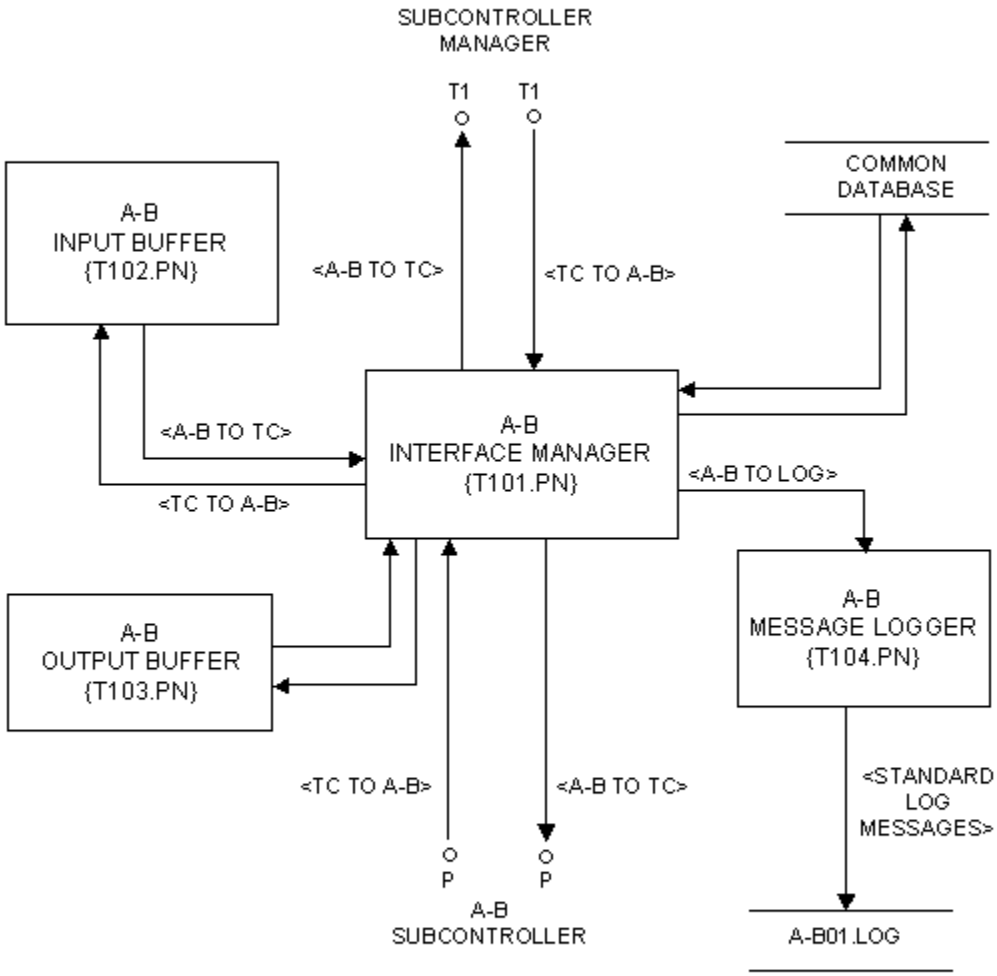

3.2.3.10.1 T101.PN - A-B Interface Manager

Process Name	Process ID #	Date
A-B Interface Manager	T101.PN	November 1, 1996

Requirements ID #(s)
SECS-RI13, SECS-RC1.1, SECS-RC1.1.8, SECS-RC4.2, SECS-RC4.3

Process Narrative

The A-B Interface Manager accepts transactions from the Subcontroller Manager. Single tote transactions are immediately sent to the A-B Output Buffer for storage. Messages concerning tote chains are accumulated and sent to the A-B Output Buffer sequentially. If logging is turned on, the output transaction is sent to the A-B Message Logger. It then retrieves a stored transaction from the A-B Output Buffer and attempts to forward it to the A-B Subcontroller via the Interface manager. If the transmission is successful, further messages are accepted from the A-B Output Buffer and sent until the buffer is empty. If a transmission is unsuccessful, retransmission is attempted.

The A-B Interface Manager also accepts transactions from the A-B Subcontroller and passes them to the A-B Input Buffer for storage. If logging is turned on, the transaction is sent to the A-B Message Logger. When a message is requested by the Subcontroller Manager, a transaction is retrieved from the A-B Input Buffer and returned to the Subcontroller Manager.

3.2.3.10.2 **T102.PN - A-B Input Buffer**

Process Name	Process ID #	Date
A-B Input Buffer	T102.PN	November 1, 1996

Requirements ID #(s)
SECS-RC4.2

Process Narrative

The A-B Input Buffer accepts messages from the A-B Interface Manager process and places them in a RAM queue. When a message is requested by the A-B Interface Manager, the oldest message in the queue is removed and sent to the A-B Interface Manager.

3.2.3.10.3 **T103.PN - A-B Output Buffer**

Process Name	Process ID #	Date
A-B Output Buffer	T103.PN	November 1, 1996

Requirements ID #(s)
SECS-RC4.2

Process Narrative

The A-B Output Buffer accepts messages from the A-B Interface Manager and places them in a RAM queue. When a message is requested by the A-B Interface Manager, the oldest message in the queue is removed and sent to the A-B Interface Manager.

3.2.3.10.4 T104.PN - A-B Message Logger

Process Name	Process ID #	Date
A-B Message Logger	T104.PN	November 1, 1996

Requirements ID #(s)
SECS-RC4.3

Process Narrative

The A-B Message Logger accepts messages from the A-B Interface Manager process and writes them to a disk file.

3.2.3.11 TA.DFD

Process ID #	Date
TA.DFD - Towline Interface	November 6, 1997

Requirement ID #(s)
SECS-RC1.1, SECS-RC1.4, SECS-RC3.1, SECS-RC4.2, SECS-RC4.3

Data Flow Diagram

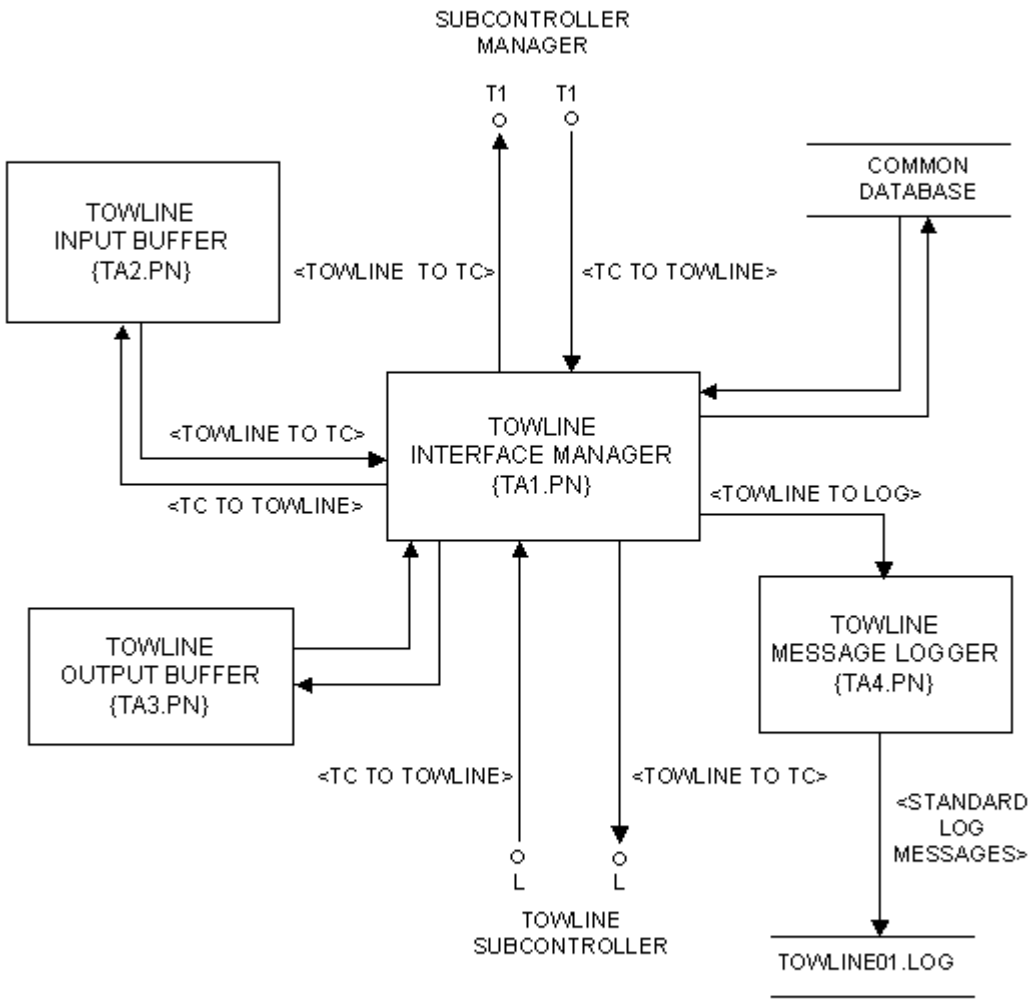

3.2.3.11.1 TA1.PN - Towline Interface Manager

Process Name	Process ID #	Date
Towline Interface Manager	TA1.PN	November 6, 1997

Requirement ID #(s)

SECS-RC1.1, SECS-RC1.4, SECS-RC3.1, SECS-RC4.2, SECS-RC4.3

Process Narrative

The Towline Interface Manager (TA1.PN) accepts transactions from the Subcontroller Manager (T.DFD) and passes them to the Towline Output Buffer (TA3.PN) for message queuing. If logging is turned on, the transaction is sent to the Towline Message Logger (TA4.PN). It then retrieves a stored transaction from the Towline Output Buffer (TA3.PN) and attempts to forward it to the Towline Subcontroller (L.DFD). If the transmission is successful, further messages are accepted from the Towline Output Buffer (TA3.PN) and sent until the buffer is empty. If a transmission is unsuccessful, an ALERT message is sent to the Subcontroller Manager.

The Towline Interface Manager (TA1.PN) also accepts transactions from the Towline Subcontroller and passes them to the Towline Input Buffer (TA2.PN) for storage. If logging is turned on, the transaction is sent to the Towline Message Logger (TA4.PN). When a message is requested by the Subcontroller Manager, a transaction is retrieved from the Towline Input Buffer (TA2.PN) and returned to the Subcontroller Manager.

3.2.3.11.2 TA2.PN - Towline Input Buffer

Process Name	Process ID #	Date
Towline Input Buffer	TA2.PN	November 6, 1997

Requirement ID #(s)
SECS-RC4.2

Process Narrative

The Towline Input Buffer (TA2.PN) accepts messages from the Towline Interface Manager (TA1.PN) and places them in a RAM queue. When a message is requested by the Towline Interface Manager (TA1.PN), the oldest message in the queue is removed and sent to the Towline Interface Manager (TA1.PN).

3.2.3.11.3 TA3.PN - Towline Output Buffer

Process Name	Process ID #	Date
Towline Output Buffer	TA3.PN	November 6, 1997

Requirement ID #(s)
SECS-RC4.2

Process Narrative

The Towline Output Buffer (TA3.PN) accepts messages from the Towline Interface Manager (TA1.PN) and places them in a RAM queue. When a message is requested by the Towline Interface Manager (TA1.PN), the oldest message in the queue is removed and sent to the Towline Interface Manager (TA1.PN).

3.2.3.11.4 TA4.PN - Towline Message Logger

Process Name	Process ID #	Date
Towline Message Logger	TA4.PN	November 6, 1997

Requirement ID #(s)
SECS-RC4.3

Process Narrative

The Towline Message Logger (TA4.PN) accepts messages from the Towline Interface Manager (TA1.PN) and writes them to a disk file.

3.2.3.12 **TB.DFD**

Process ID #	Date
TB.DFD - Pallet Interface	November 6, 1997

Requirement ID #(s)
SECS-RC1.1, SECS-RC1.1.10, SECS-RC1.4, SECS-RC3.1, SECS-RC4.2, SECS-RC4.3

Data Flow Diagram

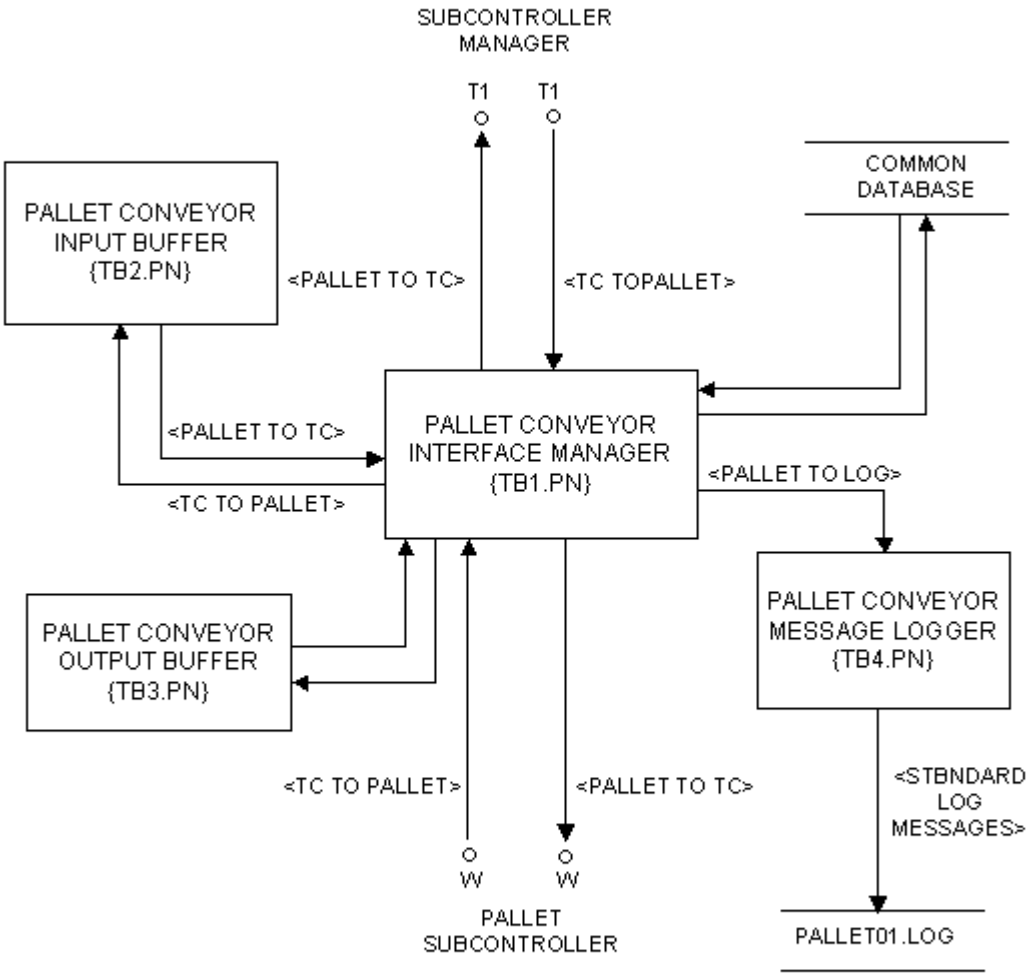

3.2.3.12.1 TB1.PN - Pallet Conveyor Interface Manager

Process Name	Process ID #	Date
Pallet Conveyor Interface Manager	TB1.PN	November 6, 1997

Requirement ID #(s)

SECS-RC1.1, SECS-RC1.1.10, SECS-RC1.4, SECS-RC3.1, SECS-RC4.2, SECS-RC4.3

Process Narrative

The Pallet Conveyor Interface Manager (TB1.PN) accepts transactions from the Subcontroller Manager and passes them to the Pallet Conveyor Output Buffer (TB3.PN) for message queuing. If logging is turned on, the transaction is sent to the Pallet Conveyor Message Logger (TB4.PN). It then retrieves a stored transaction from the Pallet Conveyor Output Buffer (TB3.PN) and attempts to forward it to the Pallet Conveyor Subcontroller. If the transmission is successful, further messages are accepted from the Pallet Conveyor Output Buffer (TB3.PN) and sent until the buffer is empty. If a transmission is unsuccessful, an ALERT message is sent to the Subcontroller Manager.

The Pallet Conveyor Interface Manager (TB1.PN) also accepts transactions from the Pallet Conveyor Subcontroller and passes them to the Pallet Conveyor Input Buffer (TB2.PN) for storage. If logging is turned on, the transaction is sent to the Pallet Conveyor Message Logger (TB4.PN). When a message is requested by the Subcontroller Manager, a transaction is retrieved from the Pallet Conveyor Input Buffer (TB2.PN) and returned to the Subcontroller Manager.

3.2.3.12.2 **TB2.PN - Pallet Conveyor Input Buffer**

Process Name	Process ID #	Date
Pallet Conveyor Input Buffer	TB2.PN	November 6, 1997

Requirement ID #(s)
SECS-RC1.1.10, SECS-RC4.2

Process Narrative

The Pallet Conveyor Input Buffer (TB2.PN) accepts messages from the Pallet Conveyor Interface Manager (TB1.PN) and places them in a RAM queue. When a message is requested by the Pallet Conveyor Interface Manager (TB1.PN), the oldest message in the queue is removed and sent to the Pallet Conveyor Interface Manager (TB1.PN).

3.2.3.12.3 **TB3.PN - Pallet Conveyor Output Buffer**

Process Name	Process ID #	Date
Pallet Conveyor Output Buffer	TB3.PN	November 6, 1997

Requirement ID #(s)
SECS-RC1.1.10, SECS-RC4.2

Process Narrative

The Pallet Conveyor Output Buffer (TB3.PN) accepts messages from the Pallet Conveyor Interface Manager (TB1.PN) and places them in a RAM queue. When a message is requested by the Pallet Conveyor Interface Manager (TB1.PN), the oldest message in the queue is removed and sent to the Pallet Conveyor Interface Manager (TB1.PN).

3.2.3.12.4 TB4.PN - Pallet Conveyor Message Logger

Process Name	Process ID #	Date
Pallet Conveyor Message Logger	TB4.PN	November 6, 1997

Requirement ID #(s)
SECS-RC1.1.10, SECS-RC4.3

Process Narrative

The Pallet Conveyor Message Logger (TB4.PN) accepts messages from the Pallet Conveyor Interface Manager (TB1.PN) and writes them to a disk file.

3.2.3.13 **TC.DFD**

Process ID #	Date
TC.DFD - Tote Conveyor Interface	November 6, 1997

Requirement ID #(s)
SECS-RC1.1, SECS-RC1.1.10, SECS-RC1.4, SECS-RC3.1, SECS-RC4.2, SECS-RC4.3

Data Flow Diagram

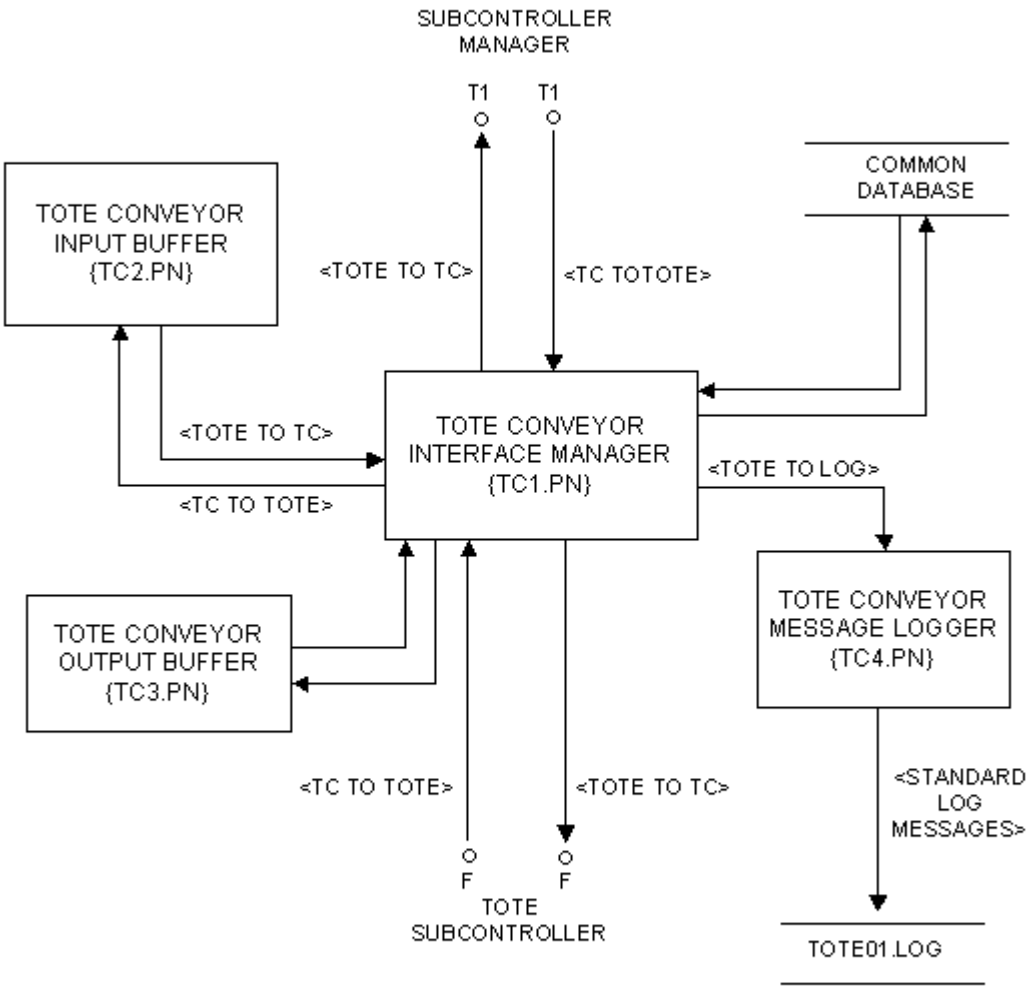

3.2.3.13.1 TC1.PN - Tote Conveyor Interface

Process Name	Process ID #	Date
Tote Conveyor Interface Manager	TC1.PN	November 6, 1997

Requirement ID #(s)

SECS-RC1.1, SECS-RC1.1.10, SECS-RC1.4, SECS-RC3.1, SECS-RC4.2, SECS-RC4.3

Process Narrative

The Tote Conveyor Interface Manager (TC1.PN) accepts transactions from the Subcontroller Manager and passes them to the Tote Conveyor Output Buffer (TC3.PN) for message queuing. If
logging is turned on, the transaction is sent to the Tote Conveyor Message Logger (TC4.PN). It then retrieves a stored transaction from the Tote Conveyor Output Buffer (TC3.PN) and attempts to forward it to the Tote Conveyor Subcontroller. If the transmission is successful, further messages are accepted from the Tote Conveyor Output Buffer (TC3.PN) and sent until the buffer is empty. If a transmission is unsuccessful, an ALERT message is sent to the Subcontroller Manager.

The Tote Conveyor Interface Manager (TC1.PN) also accepts transactions from the Tote Conveyor Subcontroller and passes them to the Tote Conveyor Input Buffer (TC2.PN) for storage. If logging is turned on, the transaction is sent to the Tote Conveyor Message Logger (TC4.PN). When a message is requested by the Subcontroller Manager, a transaction is retrieved from the Tote Conveyor Input Buffer (TC2.PN) and returned to the Subcontroller Manager.

3.2.3.13.2 TC2.PN - Tote Conveyor Input Buffer

Process Name	Process ID #	Date
Tote Conveyor Input Buffer	TC2.PN	November 6, 1997

Requirement ID #(s)
SECS-RC1.1.10, SECS-RC4.2

Process Narrative

The Tote Conveyor Input Buffer (TC2.PN) accepts messages from the Tote Conveyor Interface Manager (TC1.PN) and places them in a RAM queue. When a message is requested by the Tote Conveyor Interface Manager (TC1.PN), the oldest message in the queue is removed and sent to the Tote Conveyor Interface Manager (TC1.PN).

3.2.3.13.3 TC3.PN - Tote Conveyor Output Buffer

Process Name	Process ID #	Date
Tote Conveyor Output Buffer	TC3.PN	November 6, 1997

Requirement ID #(s)
SECS-RC1.1.10, SECS-RC4.2

Process Narrative

The Tote Conveyor Output Buffer (TC3.PN) accepts messages from the Tote Conveyor Interface Manager (TC1.PN) and places them in a RAM queue. When a message is requested by the Tote Conveyor Interface Manager (TC1.PN), the oldest message in the queue is removed and sent to the Tote Conveyor Interface Manager (TC1.PN).

3.2.3.13.4 TC4.PN - Tote Conveyor Message Logger

Process Name	Process ID #	Date
Tote Conveyor Message Logger	TC4.PN	November 6, 1997

Requirement ID #(s)
SECS-RC1.1.10, SECS-RC4.3

Process Narrative

The Tote Conveyor Message Logger (TC4.PN) accepts messages from the Tote Conveyor Interface Manager (TC1.PN) and writes them to a disk file.

3.2.3.14 **TD.DFD**

Process ID #	Date
TD.DFD - Sorter Interface	November 6, 1997

Requirement ID #(s)
SECS-RC1.1, SECS-RC1.1.9, SECS-RC1.4, SECS-RC3.1, SECS-RC4.2, SECS-RC4.3

Data Flow Diagram

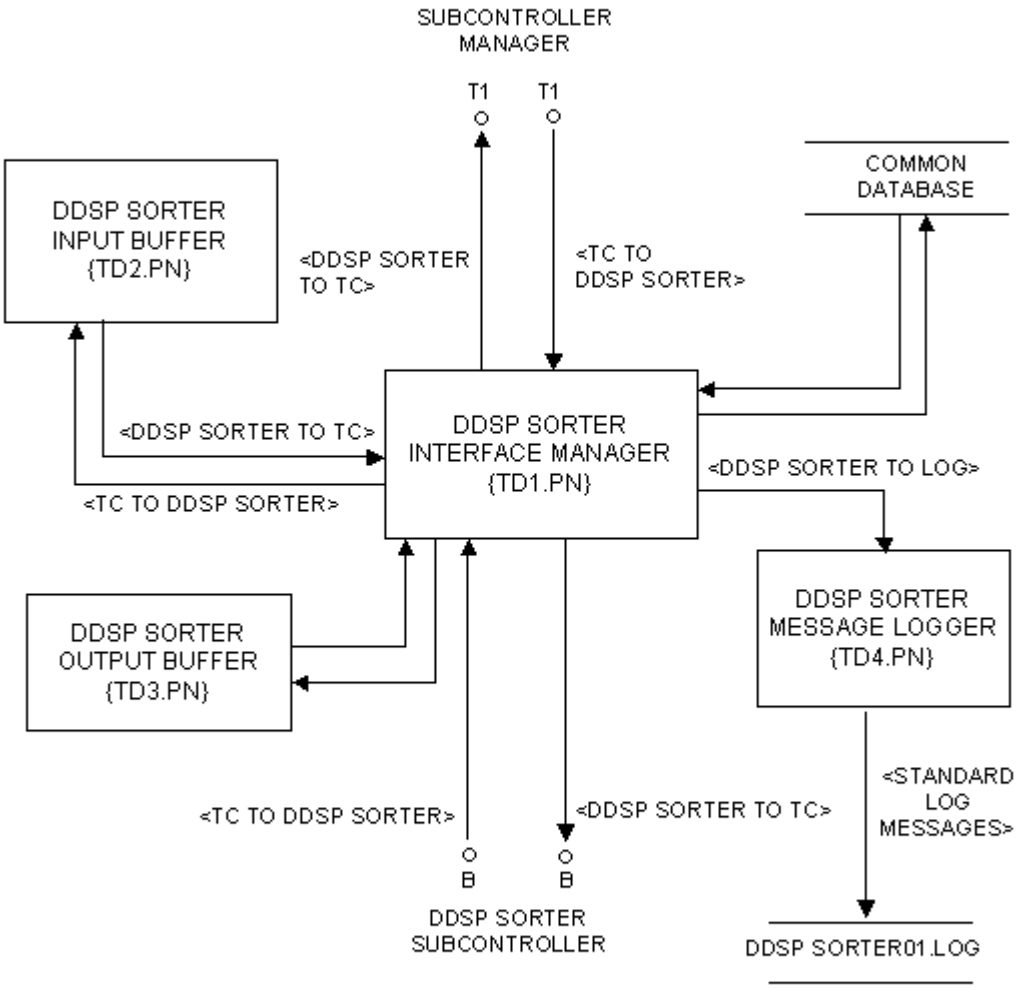

3.2.3.14.1 TD1.PN - Sorter Interface Manager

Process Name	Process ID #	Date
Sorter Interface Manager	TD1.PN	November 6, 1997

Requirement ID #(s)
SECS-RC1.1, SECS-RC1.1.9, SECS-RC1.4, SECS-RC3.1, SECS-RC4.2, SECS-RC4.3

Process Narrative

The Sorter Interface Manager (TD1.PN) accepts transactions from the Subcontroller Manager and passes them to the Sorter Output Buffer (TD3.PN) for message queuing. If logging is turned on, the transaction is sent to the Sorter Message Logger (TD4.PN). It then retrieves a stored transaction from the Sorter Output Buffer (TD3.PN) and attempts to forward it to the Sorter Subcontroller. If the transmission is successful, further messages are accepted from the Sorter Output Buffer (TD3.PN) and sent until the buffer is empty. If a transmission is unsuccessful, an ALERT message is sent to the Subcontroller Manager.

The Sorter Interface Manager (TD1.PN) also accepts transactions from the Sorter Subcontroller and passes them to the Sorter Input Buffer (TD2.PN) for storage. If logging is turned on, the transaction is sent to the Sorter Message Logger (TD4.PN). When a message is requested by the Subcontroller Manager, a transaction is retrieved from the Sorter Input Buffer (TD2.PN) and returned to the Subcontroller Manager.

3.2.3.14.2 **TD2.PN - Sorter Input Buffer**

Process Name	Process ID #	Date
Sorter Input Buffer	TD2.PN	November 6, 1997
Requirement ID #(s)		
SECS-RC1.1.9, SECS-RC4.2		

Process Narrative

The Sorter Input Buffer (TD2.PN) accepts messages from the Sorter Interface Manager (TD1.PN) and places them in a RAM queue. When a message is requested by the Sorter Interface Manager (TD1.PN), the oldest message in the queue is removed and sent to the Sorter Interface Manager (TD1.PN).

3.2.3.14.3 **TD3.PN - Sorter Output Buffer**

Process Name	Process ID #	Date
Sorter Output Buffer	TD3.PN	November 6, 1997

Requirement ID #(s)
SECS-RC1.1.9, SECS-RC4.2

Process Narrative

The Sorter Output Buffer (TD3.PN) accepts messages from the Sorter Interface Manager (TD1.PN) and places them in a RAM queue. When a message is requested by the Sorter Interface Manager (TD1.PN), the oldest message in the queue is removed and sent to the Sorter Interface Manager (TD1.PN).

3.2.3.14.4 TD4.PN - Sorter Message Logger

Process Name	Process ID #	Date
Sorter Message Logger	TD4.PN	November 6, 1997

Requirement ID #(s)
SECS-RC1.1.9, SECS-RC4.3

Process Narrative

The Sorter Message Logger (TD4.PN) accepts messages from the Sorter Interface Manager (TD1.PN) and writes them to a disk file.

3.2.3.15 **TE.DFD**

Process ID #	Date
TE.DFD - Keypad Interface	November 6, 1997

Requirement ID #(s)
SECS-RC3.1, SECS-RC4.2, SECS-RC4.3, SECS-RC12.4

Data Flow Diagram

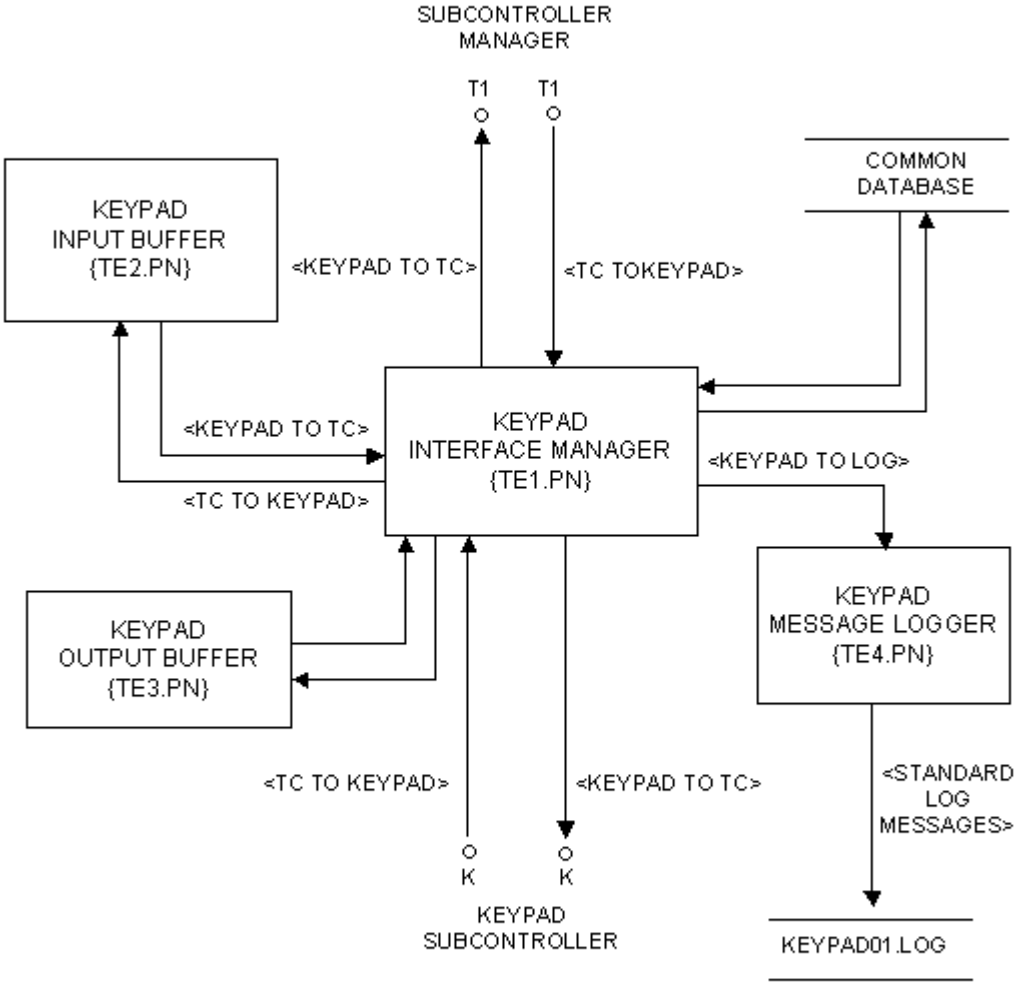

3.2.3.15.1 TE1.PN - Keypad Interface Manager

Process Name	Process ID #	Date
Keypad Interface Manager	TE1.PN	November 6, 1997

Requirement ID #(s)
SECS-RC3.1, SECS-RC4.2, SECS-RC4.3, SECS-RC12.4

Process Narrative

The Keypad Interface Manager (TE1.PN) accepts transactions from the Subcontroller Manager and passes them to the Keypad Output Buffer (TE3.PN) for message queuing. If logging is turned on, the transaction is sent to the Keypad Message Logger (TE4.PN). It then retrieves a stored transaction from the Keypad Output Buffer (TE3.PN) and attempts to forward it to the Keypad Subcontroller. If the transmission is successful, further messages are accepted from the Keypad Output Buffer (TE3.PN) and sent until the buffer is empty. If a transmission is unsuccessful, an ALERT message is sent to the Subcontroller Manager.

The Keypad Interface Manager (TE1.PN) also accepts transactions from the Keypad Subcontroller and passes them to the Keypad Input Buffer (TE2.PN) for storage. If logging is turned on, the transaction is sent to the Keypad Message Logger (TE4.PN). When a message is requested by the Subcontroller Manager, a transaction is retrieved from the Keypad Input Buffer (TE2.PN) and returned to the Subcontroller Manager.

3.2.3.15.2 TE2.PN - Keypad Input Buffer

Process Name	Process ID #	Date
Keypad Input Buffer	TE2.PN	November 6, 1997

Requirement ID #(s)
SECS-RC4.2

Process Narrative

The Keypad Input Buffer (TE2.PN) accepts messages from the Keypad Interface Manager (TE1.PN) and places them in a RAM queue. When a message is requested by the Keypad Interface Manager (TE1.PN), the oldest message in the queue is removed and sent to the Keypad Interface Manager (TE1.PN).

3.2.3.15.3 TE3.PN - Keypad Output Buffer

Process Name	Process ID #	Date
Keypad Output Buffer	TE3.PN	November 6, 1997

Requirement ID #(s)
SECS-RC4.2

Process Narrative

The Keypad Output Buffer (TE3.PN) accepts messages from the Keypad Interface Manager (TE1.PN) and places them in a RAM queue. When a message is requested by the Keypad Interface Manager (TE1.PN), the oldest message in the queue is removed and sent to the Keypad Interface Manager (TE1.PN).

3.2.3.15.4 TE4.PN - Keypad Message Logger

Process Name	Process ID #	Date
Keypad Message Logger	TE4.PN	November 6, 1997

Requirement ID #(s)
SECS-RC4.3

Process Narrative

The Keypad Message Logger (TE4.PN) accepts messages from the Keypad Interface Manager (TE1.PN) and writes them to a disk file.

3.2.3.16 **T11.DFD**

Process ID #	Date
T11.DFD - AWOS Interface	May 5, 1999

Requirement ID #(s)

Data Flow Diagram

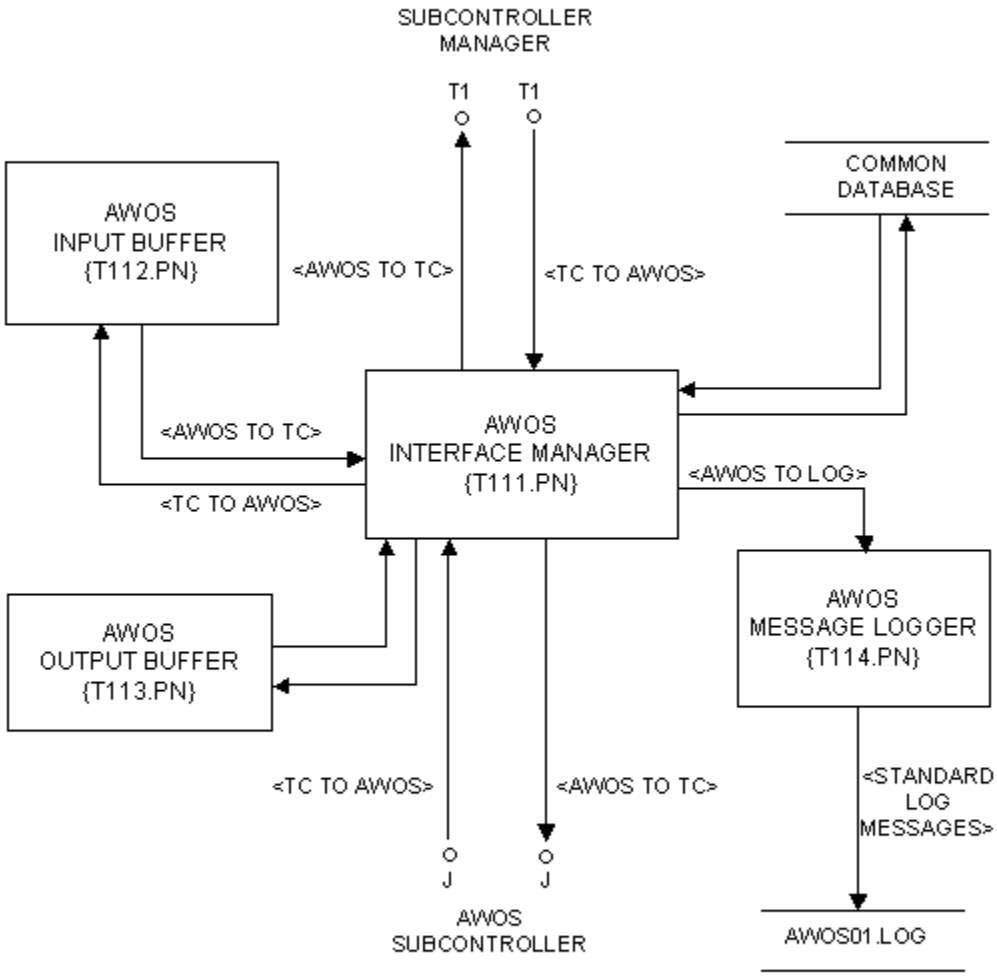

3.2.3.16.1 T111.PN - AWOS Interface Manager

Process Name	Process ID #	Date
AWOS Interface Manager	T111.PN	May 5, 1999

Requirements ID #(s)

Process Narrative

The AWOS Interface Manager accepts transactions from the Subcontroller Manager and passes them to the AWOS Output Buffer for storage. Messages concerning tote chains are accumulated and sent to the A-B Output Buffer sequentially. If logging is turned on, the output transaction is sent to the AWOS Message Logger. It then retrieves a stored message and forwards it to the AWOS Subcontroller. If the transmission is successful, further messages are sent until the buffer is empty.

The AWOS Interface Manager also accepts transactions from the AWOS Subcontroller and passes them to the AWOS Input Buffer for storage. If logging is turned on, the transaction is sent to the AWOS Message Logger. When a message is requested by the Subcontroller Manager, a transaction is retrieved from the AWOS Input Buffer and returned to the Subcontroller Manager.

3.2.3.16.2 **T112.PN - AWOS Input Buffer**

Process Name	Process ID #	Date
AWOS Input Buffer	T112.PN	May 5, 1999

Requirements ID #(s)

Process Narrative

The AWOS Input Buffer accepts messages from the AWOS Interface Manager process and places them in a RAM queue. When a message is requested by the AWOS Interface Manager, the oldest message in the queue is removed and sent to the AWOS Interface Manager.

3.2.3.16.3 T113.PN - AWOS Output Buffer

Process Name	Process ID #	Date
AWOS Output Buffer	T113.PN	May 5, 1999

Requirements ID #(s)

Process Narrative

The AWOS Output Buffer accepts messages from the AWOS Interface Manager and places them in a RAM queue. When a message is requested by the AWOS Interface Manager, the oldest message in the queue is removed and sent to the AWOS Interface Manager.

3.2.3.16.4 T114.PN - AWOS Message Logger

Process Name	Process ID #	Date
AWOS Message Logger	T114.PN	May 5, 1999

Requirements ID #(s)

Process Narrative

The AWOS Message Logger accepts messages from the AWOS Interface Manager process and writes them to a disk file.

3.2.3.17 **T13.DFD**

Process ID #	Date
T13.DFD - CSF Interface	September 26, 2000

Requirement ID #(s)

Data Flow Diagram

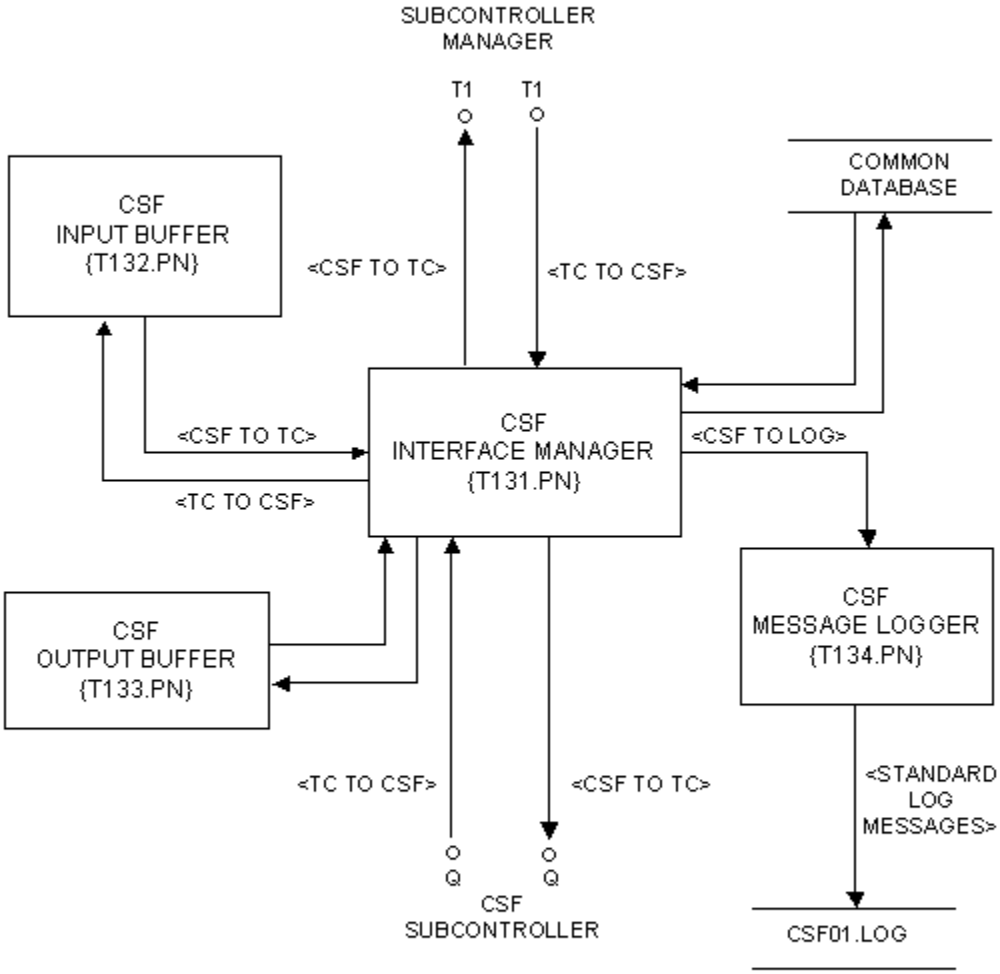

3.2.3.17.1 T131.PN - CSF Interface Manager

Process Name	Process ID #	Date
CSF Interface Manager	T131.PN	September 26, 2000

Requirements ID #(s)

Process Narrative

The CSF Interface Manager accepts transactions from the Subcontroller Manager and passes them to the CSF Output Buffer for storage. Messages concerning tote chains are accumulated and sent to the A-B Output Buffer sequentially. If logging is turned on, the output transaction is sent to the CSF Message Logger. It then retrieves a stored message and forwards it to the CSF Subcontroller. If the transmission is successful, further messages are sent until the buffer is empty.

The CSF Interface Manager also accepts transactions from the CSF Subcontroller and passes them to the CSF Input Buffer for storage. If logging is turned on, the transaction is sent to the CSF Message Logger. When a message is requested by the Subcontroller Manager, a transaction is retrieved from the CSF Input Buffer and returned to the Subcontroller Manager.

3.2.3.17.2 T132.PN - CSF Input Buffer

Process Name	Process ID #	Date
CSF Input Buffer	T132.PN	September 26, 2000

Requirements ID #(s)

Process Narrative

The CSF Input Buffer accepts messages from the CSF Interface Manager process and places them in a RAM queue. When a message is requested by the CSF Interface Manager, the oldest message in the queue is removed and sent to the CSF Interface Manager.

3.2.3.17.3 T133.PN - CSF Output Buffer

Process Name	Process ID #	Date
CSF Output Buffer	T133.PN	September 26, 2000

Requirements ID #(s)

Process Narrative

The CSF Output Buffer accepts messages from the CSF Interface Manager and places them in a RAM queue. When a message is requested by the CSF Interface Manager, the oldest message in the queue is removed and sent to the CSF Interface Manager.

3.2.3.17.4 T134.PN - CSF Message Logger

Process Name	Process ID #	Date
CSF Message Logger	T134.PN	September 26, 2000

Requirements ID #(s)

Process Narrative

The CSF Message Logger accepts messages from the CSF Interface Manager process and writes them to a disk file.

3.2.3.18 **T14.DFD**

Process ID #	Date
T14.DFD - Raymond Carousel Interface	September 26, 2000

Requirement ID #(s)

Data Flow Diagram

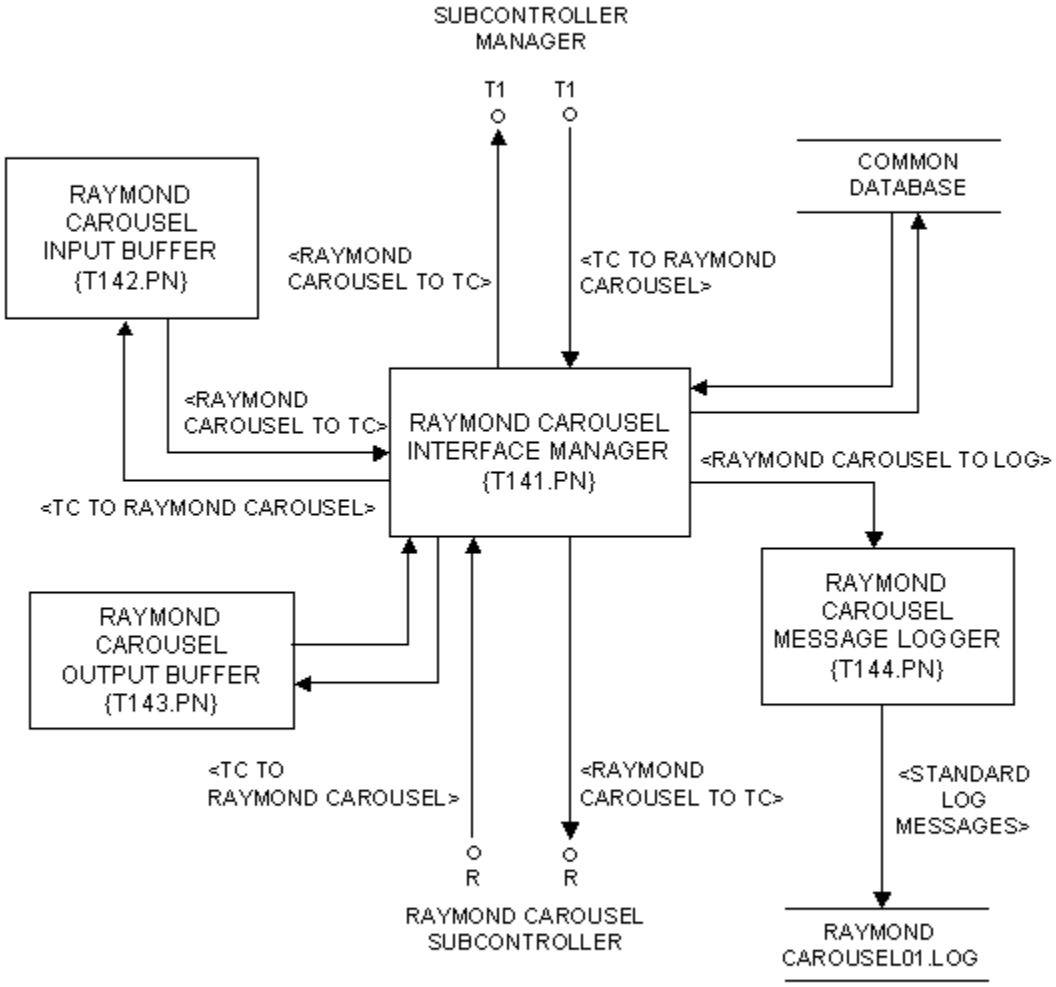

3.2.3.18.1 T141.PN - Raymond Carousel Interface Manager

Process Name	Process ID #	Date
Raymond Carousel - Interface Manager	T141.PN	September 26, 2000

Requirements ID #(s)

Process Narrative

The Raymond Carousel Interface Manager accepts transactions from the Subcontroller Manager and passes them to the Raymond Carousel Output Buffer for storage. If logging is turned on, the transaction is sent to the Raymond Carousel Message Logger. It then retrieves a stored transaction from the Raymond Carousel Output Buffer and attempts to forward it to the Raymond Carousel Subcontroller. If the transmission is successful, further messages are accepted from the Raymond Carousel Output Buffer and sent until the buffer is empty. If a transmission is unsuccessful, an ALT (Alert) message is sent to the Subcontroller Manager.

The Raymond Carousel Interface Manager also accepts transactions from the Raymond Carousel Subcontroller and passes them to the Raymond Carousel Input Buffer for storage. If logging is turned on, the transaction is sent to the Raymond Carousel Message Logger. When a message is requested by the Subcontroller Manager, a transaction is retrieved from the Raymond Carousel Input Buffer and returned to the Subcontroller Manager.

3.2.3.18.2 T142.PN - Raymond Carousel Input Buffer

Process Name	Process ID #	Date
Raymond Carousel Input Buffer	T142.PN	September 26, 2000

Requirements ID #(s)

Process Narrative

The Raymond Carousel Input Buffer accepts messages from the Raymond Carousel Interface Manager process and places them in a RAM queue. When a message is requested by the Raymond Carousel Interface Manager, the oldest message in the queue is removed and sent to the Raymond Carousel Interface Manager.

3.2.3.18.3 T143.PN - Raymond Carousel Output Buffer

Process Name	Process ID #	Date
Raymond Carousel Output Buffer	T143.PN	September 26, 2000

Requirements ID #(s)

Process Narrative

The Raymond Carousel Output Buffer accepts messages from the Raymond Carousel Interface Manager and places them in a RAM queue. When a message is requested by the Raymond Carousel Interface Manager, the oldest message in the queue is removed and sent to the Raymond Carousel Interface Manager.

3.2.3.19 **T15.DFD**

Process ID #	Date
T15.DFD - Norfolk DPI Tote Conveyor	March 4, 2002

Requirement ID #(s)

Data Flow Diagram

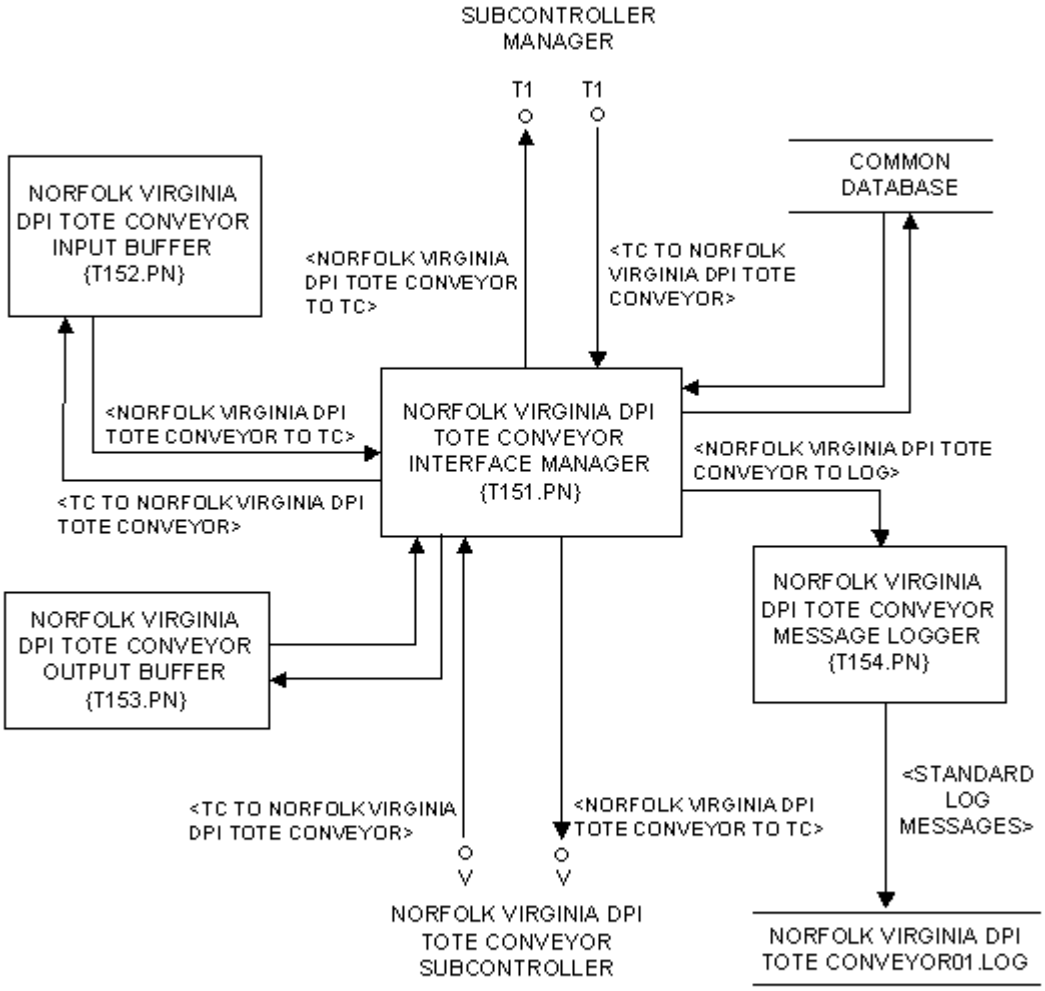

3.2.3.19.1 T151.PN - Norfolk Virginia DPI Tote Conveyor Interface

Process Name	Process ID #	Date
Norfolk Virginia DPI Tote Conveyor Interface Manager	T151.PN	March 4, 2002

Requirements ID #(s)

Process Narrative

The Norfolk Virginia DPI Tote Conveyor Interface Manager accepts transactions from the Subcontroller Manager and passes them to the Output Buffer for storage. If logging is turned on, the transaction is sent to the Norfolk Virginia DPI Tote Conveyor Logger. It then retrieves a stored transaction from the Norfolk Virginia DPI Tote Conveyor Output Buffer and attempts to forward it to the Norfolk Virginia DPI Tote Conveyor Subcontroller. If the transmission is successful, further messages are accepted from the Norfolk Virginia DPI Tote Conveyor Output Buffer and sent until the buffer is empty.

The Norfolk Virginia DPI Tote Conveyor Interface Manager also accepts transactions from the Norfolk Virginia DPI Tote Conveyor Subcontroller and passes them to the Norfolk Virginia DPI Tote Conveyor Input Buffer for storage. If logging is turned on, the transaction is sent to the Norfolk Virginia DPI Tote Conveyor Message Logger. When a message is requested by the Subcontroller Manager, a transaction is retrieved from the Norfolk Virginia DPI Tote Conveyor Input Buffer and returned to the Subcontroller Manager.

3.2.3.19.2 T152.PN - Norfolk Virginia DPI Tote Conveyor Input Buffer

Process Name	Process ID #	Date
Norfolk Virginia DPI Tote Conveyor Input Buffer	T152.PN	March 4, 2002

Requirements ID #(s)

Process Narrative

The Norfolk Virginia DPI Tote Conveyor Input Buffer accepts messages from the Norfolk Virginia DPI Tote Conveyor Interface Manager process and places them in a RAM queue. When the Norfolk Virginia DPI Tote Conveyor Interface Manager requests a message, the oldest message in the queue is removed and sent to the Norfolk Virginia DPI Tote Conveyor Interface Manager.

3.2.3.19.3 T153.PN - Norfolk Virginia DPI Tote Conveyor Output Buffer

Process Name	Process ID #	Date
Norfolk Virginia DPI Tote Conveyor Output Buffer	T153.PN	March 4, 2002

Requirements ID #(s)

Process Narrative

The Norfolk Virginia DPI Tote Conveyor Output Buffer accepts messages from the Norfolk Virginia DPI Tote Conveyor Interface Manager and places them in a RAM queue. When the Norfolk Virginia DPI Tote Conveyor Interface Manager requests a message, the oldest message in the queue is removed and sent to the Norfolk Virginia DPI Tote Conveyor Interface Manager.

3.2.3.19.4 T154.PN - Norfolk Virginia DPI Tote Conveyor Message Logger

Process Name	Process ID #	Date
Norfolk Virginia DPI Tote Conveyor Message Logger	T154.PN	March 4, 2002

Requirements ID #(s)

Process Narrative

The Norfolk Virginia DPI Tote Conveyor Message Logger accepts messages from the Norfolk Virginia DPI Tote Conveyor Interface Manager process and writes them to a disk file.

3.2.3.20 **T16.DFD**

Process ID #	Date
T16.DFD -Active Item Interface	July 9, 2001

Requirement ID #(s)
SECS-RC1.1, SECS-RC1.1.10, SECS-RC1.4, SECS-RC3.1, SECS-RC4.2, SECS-RC4.3

Data Flow Diagram

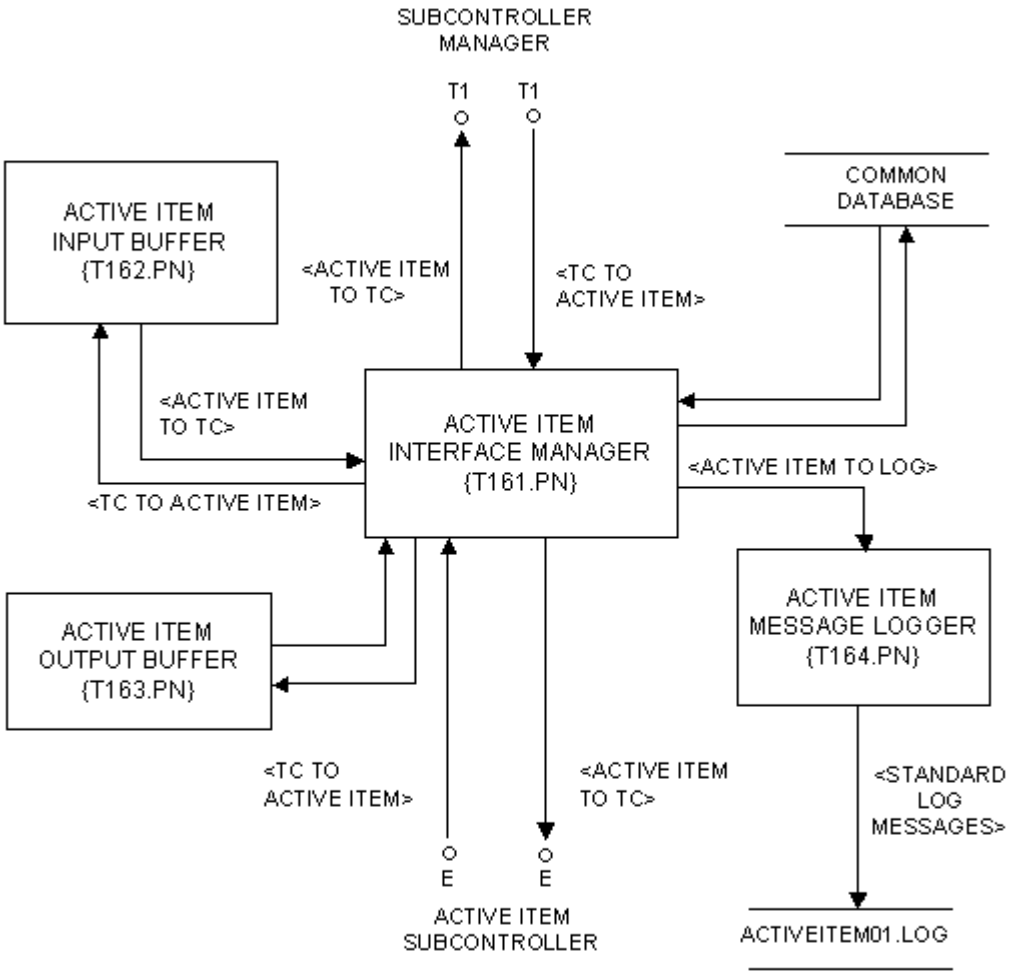

3.2.3.20.1 T161.PN - Active Item Interface

Process Name	Process ID #	Date
Active Item Interface Manager	T161.PN	July 9, 2001

Requirement ID #(s)

SECS-RC1.1, SECS-RC1.1.10, SECS-RC1.4, SECS-RC3.1, SECS-RC4.2, SECS-RC4.3

Process Narrative

The Active Item Interface Manager (T161.PN) accepts transactions from the Subcontroller Manager and passes them to the Active Item Output Buffer (T163.PN) for message queuing. If logging is turned on, the transaction is sent to Active Item Message Logger (T164.PN). It then retrieves a stored transaction from the Active Item Output Buffer (T163.PN) and attempts to forward it to the Active Item Subcontroller. If the transmission is successful, further messages are accepted from the Active Item Output Buffer (T163.PN) and sent until the buffer is empty. If a transmission is unsuccessful, an ALERT message is sent to the Subcontroller Manager.

The Active Item Interface Manager (T161.PN) also accepts transactions from the Active Item Subcontroller and passes them to the Active Item Input Buffer (T162.PN) for storage. If logging is turned on, the transaction is sent to the Active Item Message Logger (T164.PN). When a message is requested by the Subcontroller Manager, a transaction is retrieved from the Active Item Input Buffer (T162.PN) and returned to the Subcontroller Manager.

3.2.3.20.2 **T162.PN - Active Item Input Buffer**

Process Name	Process ID #	Date
Active Item Input Buffer	T162.PN	July 9, 2001

Requirement ID #(s)
SECS-RC1.1.10, SECS-RC4.2

Process Narrative

The Active Item Input Buffer (T162.PN) accepts messages from the Active Item Interface Manager (T161.PN) and places them in a RAM queue. When a message is requested by the Active Item Interface Manager (T161.PN), the oldest message in the queue is removed and sent to the Active Item Interface Manager (T161.PN).

3.2.3.20.3 **T163.PN - Active Item Output Buffer**

Process Name	Process ID #	Date
Active Item Output Buffer	T163.PN	July 9, 2001

Requirement ID #(s)
SECS-RC1.1.10, SECS-RC4.2

Process Narrative

The Active Item Output Buffer (T163.PN) accepts messages from the Active Item Interface Manager (T161.PN) and places them in a RAM queue. When a message is requested by the Active Item Interface Manager (T161.PN), the oldest message in the queue is removed and sent to the Active Item Interface Manager (T161.PN).

3.2.3.20.4 **T164.PN - Active Item Message Logger**

Process Name	Process ID #	Date
Active Item Message Logger	T164.PN	July 9, 2001

Requirement ID #(s)
SECS-RC1.1.10, SECS-RC4.3

Process Narrative

The Active Item Message Logger (T164.PN) accepts messages from the Active Item Interface Manager (T161.PN) and writes them to a disk file.

3.2.3.21 **T17.DFD**

Process ID #	Date
T17.DFD - Tote/Package Conveyor Interface	March 4, 2002

Requirement ID #(s)

SECS-RC1.1, SECS-RC1.1.10, SECS-RC1.4, SECS-RC3.1, SECS-RC4.2, SECS-RC4.3

Data Flow Diagram

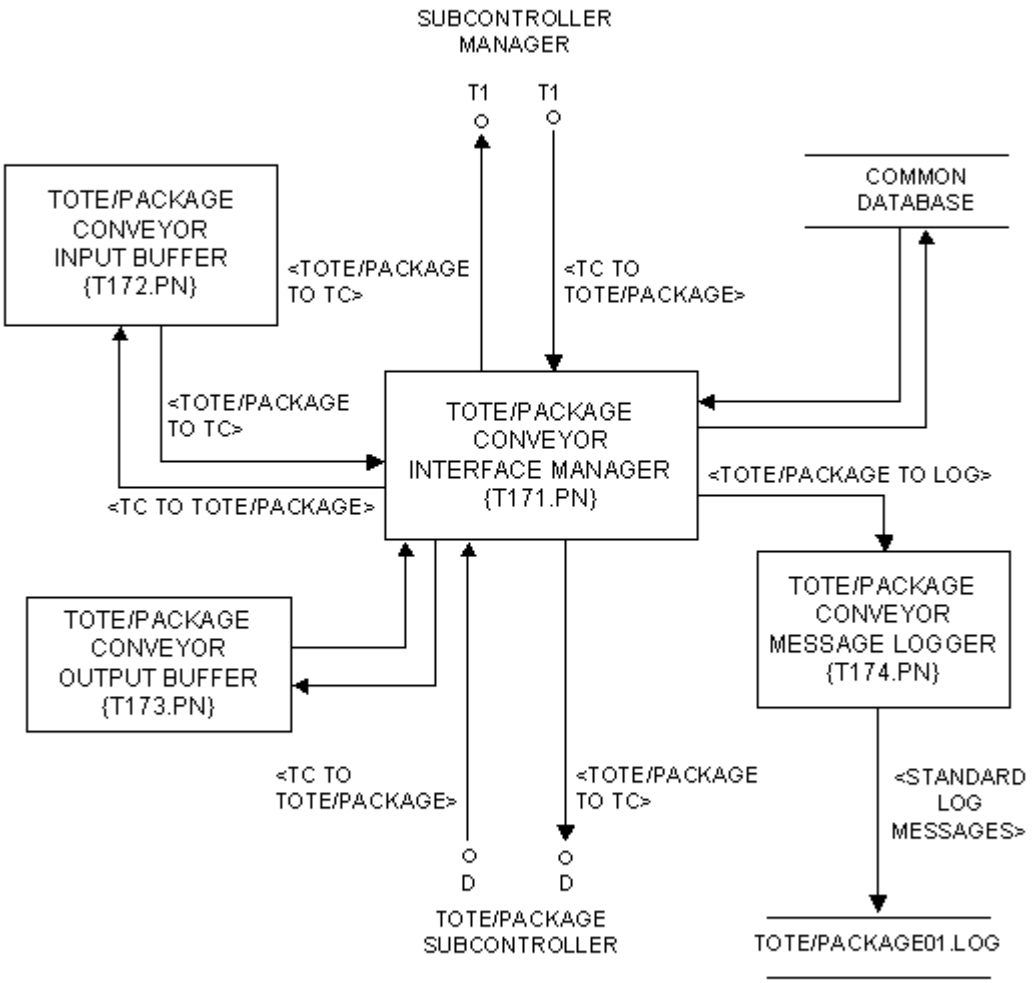

3.2.3.21.1 T171.PN - Tote/Package Conveyor Interface

Process Name	Process ID #	Date
Tote/Package Conveyor Interface Manager	T171.PN	March 4, 2002

Requirement ID #(s)

SECS-RC1.1, SECS-RC1.1.10, SECS-RC1.4, SECS-RC3.1, SECS-RC4.2, SECS-RC4.3

Process Narrative

The Tote/Package Conveyor Interface Manager (T171.PN) accepts transactions from the Subcontroller Manager and passes them to the Tote/Package Conveyor Output Buffer (T173.PN) for message queuing. If logging is turned on, the transaction is sent to the Tote/Package Conveyor Message Logger (T174.PN). It then retrieves a stored transaction from the Tote/Package Conveyor Output Buffer (T173.PN) and attempts to forward it to the Tote/Package Conveyor Subcontroller. If the transmission is successful, further messages are accepted from the Tote/Package Conveyor Output Buffer (T173.PN) and sent until the buffer is empty. If a transmission is unsuccessful, an ALERT message is sent to the Subcontroller Manager.

The Tote/Package Conveyor Interface Manager (T171.PN) also accepts transactions from the Tote/Package Conveyor Subcontroller and passes them to the Tote/Package Conveyor Input Buffer (T172.PN) for storage. If logging is turned on, the transaction is sent to the Tote/Package Conveyor Message Logger (T174.PN). When a message is requested by the Subcontroller Manager, a transaction is retrieved from the Tote/Package Conveyor Input Buffer (T172.PN) and returned to the Subcontroller Manager.

3.2.3.21.2 T172.PN - Tote/Package Conveyor Input Buffer

Process Name	Process ID #	Date
Tote/Package Conveyor Input Buffer	T172.PN	March 4, 2002

Requirement ID #(s)
SECS-RC1.1.10, SECS-RC4.2

Process Narrative

The Tote/Package Conveyor Input Buffer (T172.PN) accepts messages from the Tote/Package Conveyor Interface Manager (T171.PN) and places them in a RAM queue. When a message is requested by the Tote/Package Conveyor Interface Manager (T171.PN), the oldest message in the queue is removed and sent to the Tote/Package Conveyor Interface Manager (T171.PN).

3.2.3.21.3 T173.PN - Tote/Package Conveyor Output Buffer

Process Name	Process ID #	Date
Tote/Package Conveyor Output Buffer	T173.PN	March 4, 2002

Requirement ID #(s)
SECS-RC1.1.10, SECS-RC4.2

Process Narrative

The Tote/Package Conveyor Output Buffer (T173.PN) accepts messages from the Tote/Package Conveyor Interface Manager (T171.PN) and places them in a RAM queue. When a message is requested by the Tote/Package Conveyor Interface Manager (T171.PN), the oldest message in the queue is removed and sent to the Tote/Package Conveyor Interface Manager (T171.PN).

3.2.3.21.4 T174.PN - Tote/Package Conveyor Message Logger

Process Name	Process ID #	Date
Tote/Package Conveyor Message Logger	T174.PN	March 4, 2002

Requirement ID #(s)
SECS-RC1.1.10, SECS-RC4.3

Process Narrative

The Tote/Package Conveyor Message Logger (T174.PN) accepts messages from the Tote/Package Conveyor Interface Manager (T171.PN) and writes them to a disk file.

3.2.3.22 **T18.DFD**

Process ID #	Date
T18.DFD	January 5, 2002

Requirement ID #(s)

SECS-RI5, SECS-RC1.1, SECS-RC2.5, SECS-RC4.2, SECS-RC4.3, SECS-RC5, SECS-RC1.1.14

Data Flow Diagram

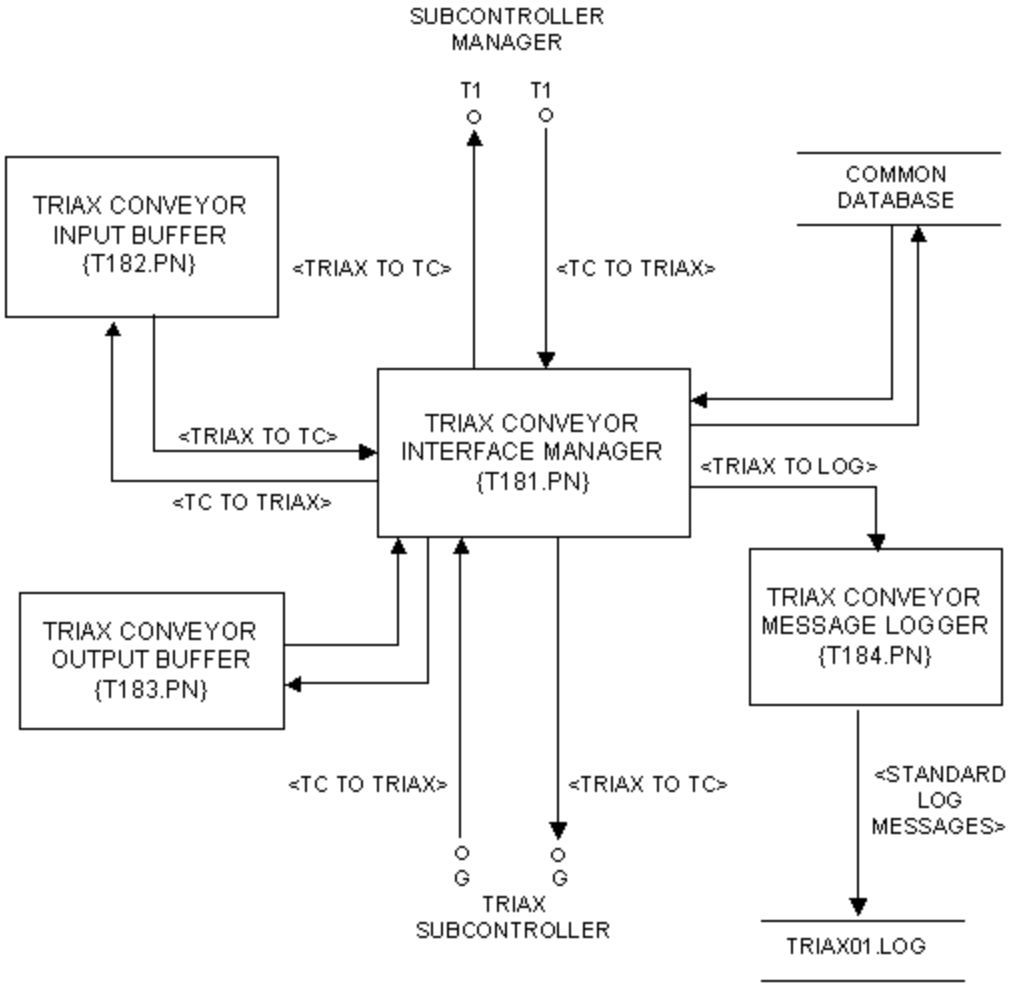

3.2.3.22.1 T181.PN - Triax Interface Manager

Process Name	Process ID #	Date
Triax Interface Manager	T181.PN	January 5, 2002

Requirements ID #(s)

SECS-RI3, SECS-RI4, SECS-RI7, SECS-RC1.1, SECS-RC2.4, SECS-RC4.2, SECS-RC4.3, SECS-RC5, SECS-RC1.1.14

Process Narrative

The Triax Interface Manager accepts transactions from the Subcontroller Manager and passes them to the Triax Output Buffer for storage. If logging is turned on, the transaction is sent to the Triax Message Logger. It then retrieves a stored transaction from the Triax Output Buffer and attempts to forward it to the Triax Subcontroller. If the transmission is successful, further messages are accepted from the Triax Output Buffer and sent until the buffer is empty. If a transmission is unsuccessful, an ALT (Alert) message is sent to the Subcontroller Manager.

The Triax Interface Manager also accepts transactions from the Triax Subcontroller and passes them to the Triax Input Buffer for storage. If logging is turned on, the transaction is sent to the Triax Message Logger. When a message is requested by the Subcontroller Manager, a transaction is retrieved from the Triax Input Buffer and returned to the Subcontroller Manager.

3.2.3.22.2 **T182.PN - Triax Input Buffer**

Process Name	Process ID #	Date
Triax Input Buffer	T182.PN	January 5, 2002

Requirements ID #(s)
SECS-RC4.2, SECS-RC1.1.14

Process Narrative

The Triax Input Buffer accepts messages from the Triax Interface Manager and places them in a RAM queue. When a message is requested by the Triax Interface Manager, the oldest message in the queue is removed and sent to the Triax Interface Manager.

3.2.3.22.3 **T183.PN - Triax Output Buffer**

Process Name	Process ID #	Date
Triax Output Buffer	T183.PN	January 5, 2002

Requirements ID #(s)
SECS-RC4.2, SECS-RC1.1.14

Process Narrative

The Triax Output Buffer accepts messages from the Triax Interface Manager and places them in a RAM queue. When a message is requested by the Triax Interface Manager, the oldest message in the queue is removed and sent to the Triax Interface Manager.

3.2.3.22.4 T184.PN - Triax Message Logger

Process Name	Process ID #	Date
Triax Message Logger	T184.PN	January 5, 2002

Requirements ID #(s)
SECS-RC2.5, SECS-RC4.3, SECS-RC1.1.14

Process Narrative

The Triax Message Logger accepts messages from the Triax Interface Manager and writes them to a disk file.

3.2.3.23 **T19.DFD**

Process ID #	Date
T19.DFD Y109	March 25, 2002

Requirement ID #(s)

SECS-RI5, SECS-RC1.1, SECS-RC2.5, SECS-RC4.2, SECS-RC4.3, SECS-RC5, SECS-RC1.1.18

Data Flow Diagram

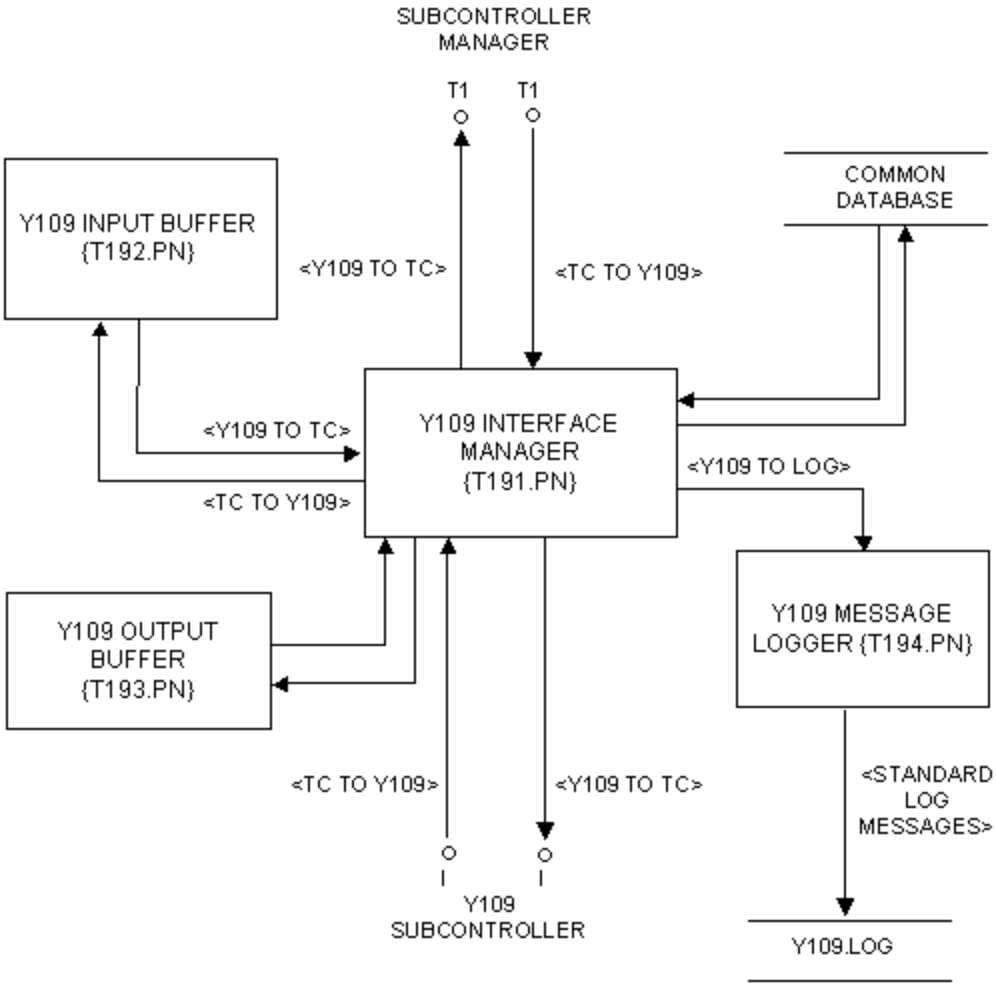

3.2.3.23.1 T191.PN - Y109 Interface Manager

Process Name	Process ID #	Date
Y109 Interface Manager	T191.PN	March 25, 2002

Requirements ID #(s)

SECS-RI3, SECS-RI4, SECS-RI7, SECS-RC1.1, SECS-RC2.4, SECS-RC4.2, SECS-RC4.3, SECS-RC5, SECS-RC1.1.18

Process Narrative

The Y109 Interface Manager accepts transactions from the Subcontroller Manager and passes them to the Triax Output Buffer for storage. If logging is turned on, the transaction is sent to the Y109 Message Logger. It then retrieves a stored transaction from the Y109 Output Buffer and attempts to forward it to the Y109 Subcontroller. If the transmission is successful, further messages are accepted from the Y109 Output Buffer and sent until the buffer is empty. If a transmission is unsuccessful, an ALT (Alert) message is sent to the Subcontroller Manager.

The Y109 Interface Manager also accepts transactions from the Y109 Subcontroller and passes them to the Y109 Input Buffer for storage. If logging is turned on, the transaction is sent to the Y109 Message Logger. When a message is requested by the Subcontroller Manager, a transaction is retrieved from the Y109 Input Buffer and returned to the Subcontroller Manager.

3.2.3.23.2 T192.PN - Y109 Input Buffer

Process Name	Process ID #	Date
Y109 Input Buffer	T192.PN	March 25, 2002

Requirements ID #(s)
SECS-RC4.2, SECS-RC1.1.18

Process Narrative

The Y109 Input Buffer accepts messages from the Y109 Interface Manager and places them in a RAM queue. When a message is requested by the Y109 Interface Manager, the oldest message in the queue is removed and sent to the Y109 Interface Manager.

3.2.3.23.3 **T193.PN - Y109 Output Buffer**

Process Name	Process ID #	Date
Y109 Output Buffer	T193.PN	March 25, 2002

Requirements ID #(s)
SECS-RC4.2, SECS-RC1.1.18

Process Narrative

The Y109 Output Buffer accepts messages from the Y109 Interface Manager and places them in a RAM queue. When a message is requested by the Y109 Interface Manager, the oldest message in the queue is removed and sent to the Y109 Interface Manager.

3.2.3.23.4 T194.PN - Y109 Message Logger

Process Name	Process ID #	Date
Y109 Message Logger	T194.PN	March 25, 2002

Requirements ID #(s)
SECS-RC2.5, SECS-RC4.3, SECS-RC1.1.18

Process Narrative

The Y109 Message Logger accepts messages from the Y109 Interface Manager and writes them to a disk file.

3.2.3.24 **T20.DFD**

Process ID #	Date
T20.DFD PS Tote Conveyor	May 29, 2002

Requirement ID #(s)

SECS-RC1.1, SECS-RC1.1.10, SECS-RC1.4, SECS-RC3.1, SECS-RC4.2, SECS-RC4.3, SECS-RC1.1.19

Data Flow Diagram

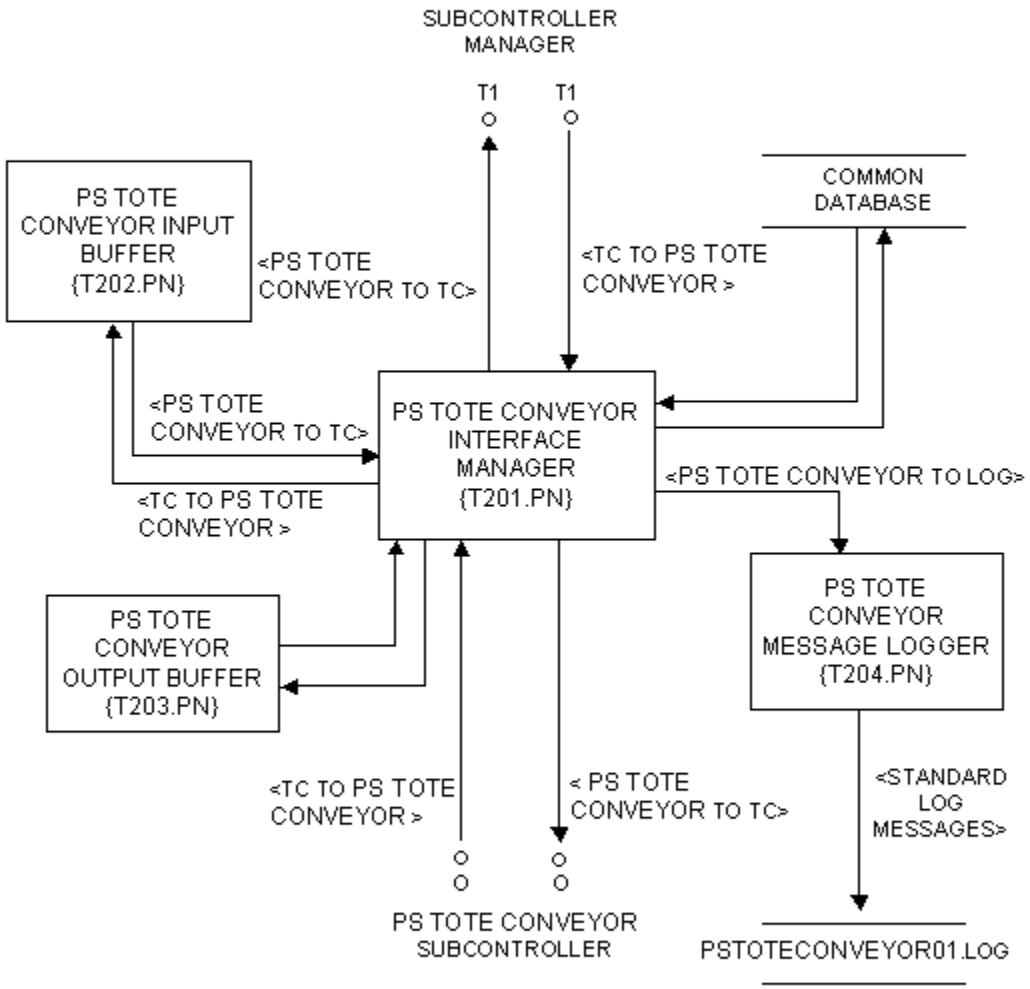

3.2.3.24.1 T201.PN - PS Tote Conveyor Interface Manager

Process Name	Process ID #	Date
PS Tote Conveyor Interface Manager	T201.PN	May 29, 2002

Requirements ID #(s)

SECS-RC1.1, SECS-RC1.1.10, SECS-RC1.4, SECS-RC3.1, SECS-RC4.2, SECS-RC4.3, SECS-RC1.1.19

Process Narrative

The PS Tote Conveyor Interface Manager accepts transactions from the Subcontroller Manager and passes them to the PS Tote Conveyor Output Buffer for storage. If logging is turned on, the transaction is sent to the PS Tote Conveyor Message Logger. It then retrieves a stored transaction from the PS Tote Conveyor Output Buffer and attempts to forward it to the PS Tote Conveyor Subcontroller. If the transmission is successful, further messages are accepted from the PS Tote Conveyor Output Buffer and sent until the buffer is empty. If a transmission is unsuccessful, an ALT (Alert) message is sent to the Subcontroller Manager.

The PS Tote Conveyor Interface Manager also accepts transactions from the PS Tote Conveyor Subcontroller and passes them to the PS Tote Conveyor Input Buffer for storage. If logging is turned on, the transaction is sent to the PS Tote Conveyor Message Logger. When a message is requested by the Subcontroller Manager, a transaction is retrieved from the PS Tote Conveyor Input Buffer and returned to the Subcontroller Manager.

3.2.3.24.2 T202.PN - PS Tote Conveyor Input Buffer

Process Name	Process ID #	Date
PS Tote Conveyor Input Buffer	T202.PN	May 29, 2002

Requirements ID #(s)
SECS-RC1.1.10, SECS-RC4.2, SECS-RC1.1.19

Process Narrative

The PS Tote Conveyor Input Buffer accepts messages from the PS Tote Conveyor Interface Manager and places them in a RAM queue. When a message is requested by the PS Tote Conveyor Interface Manager, the oldest message in the queue is removed and sent to the PS Tote Conveyor Interface Manager.

3.2.3.24.3 T203.PN - Y109 Output Buffer

Process Name	Process ID #	Date
PS Tote Conveyor Output Buffer	T203.PN	May 29, 2002

Requirements ID #(s)
SECS-RC1.1.10, SECS-RC4.2, SECS-RC1.1.19

Process Narrative

The PS Tote Conveyor Output Buffer accepts messages from the PS Tote Conveyor Interface Manager and places them in a RAM queue. When a message is requested by the PS Tote Conveyor Interface Manager, the oldest message in the queue is removed and sent to the PS Tote Conveyor Interface Manager.

3.2.3.24.4 T204.PN - PS Tote Conveyor Message Logger

Process Name	Process ID #	Date
PS Tote Conveyor Message Logger	T204.PN	May 29, 2002

Requirements ID #(s)
SECS-RC1.1.10, SECS-RC4.3, SECS-RC1.1.19

Process Narrative

The PS Tote Conveyor Message Logger accepts messages from the PS Tote Conveyor Interface Manager and writes them to a disk file.

3.2.3.25 **T21.DFD**

Process ID #	Date
T21.DFD - DDJC Sorter Interface	April 23, 2003

Requirement ID #(s)
SECS-RC1.1, SECS-RC1.1.9, SECS-RC1.4, SECS-RC3.1, SECS-RC4.2, SECS-RC4.3

Data Flow Diagram

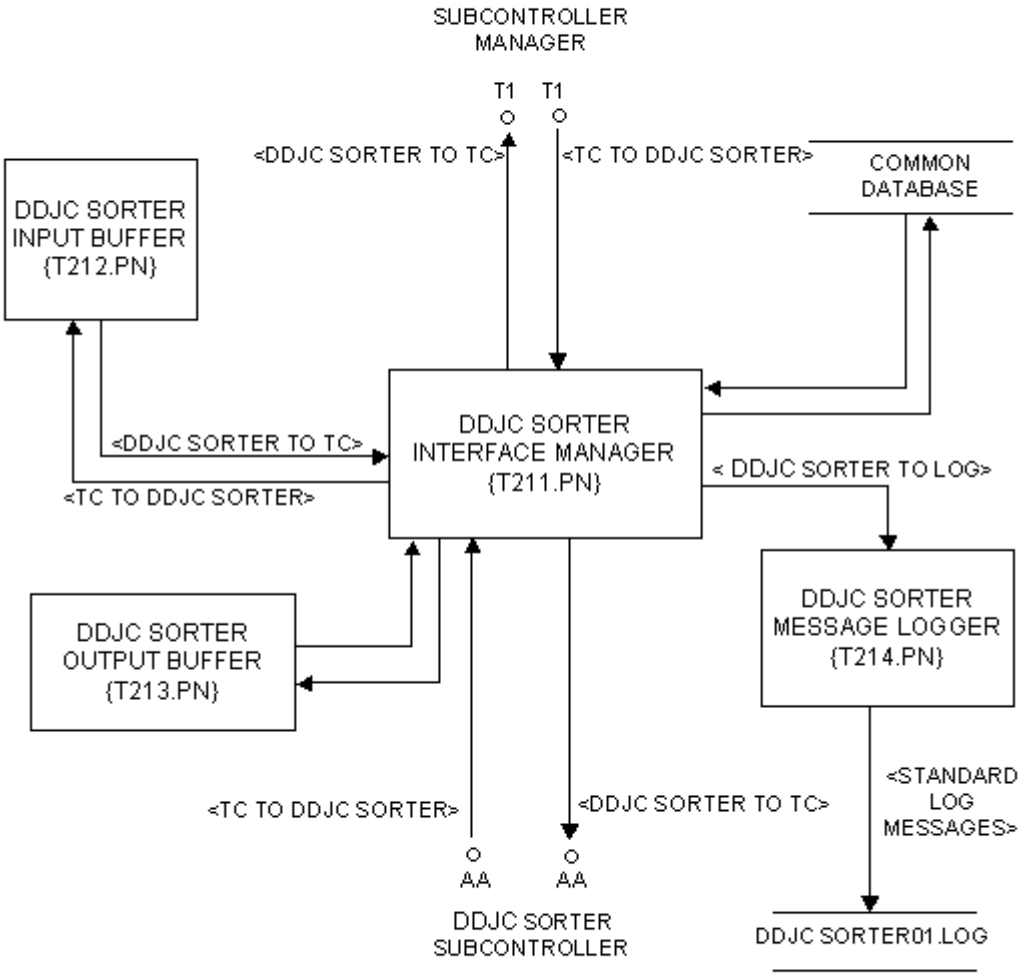

3.2.3.25.1 T211.PN - DDJC Sorter Interface Manager

Process Name	Process ID #	Date
DDJC Sorter Interface Manager	T211.PN	April 23, 2003

Requirement ID #(s)

SECS-RC1.1, SECS-RC1.1.9, SECS-RC1.4, SECS-RC3.1, SECS-RC4.2, SECS-RC4.3

Process Narrative

The DDJC Sorter Interface Manager (T211.PN) accepts transactions from the Subcontroller Manager and passes them to the DDJC Sorter Output Buffer (T213.PN) for message queuing. If logging is turned on, the transaction is sent to the DDJC Sorter Message Logger (T214.PN). It then retrieves a stored transaction from the DDJC Sorter Output Buffer (T213.PN) and attempts to forward it to the DDJC Sorter Subcontroller. If the transmission is successful, further messages are accepted from the DDJC Sorter Output Buffer (T213.PN) and sent until the buffer is empty. If a transmission is unsuccessful, an ALERT message is sent to the Subcontroller Manager.

The DDJC Sorter Interface Manager (T211.PN) also accepts transactions from the DDJC Sorter Subcontroller and passes them to the DDJC Sorter Input Buffer (T212.PN) for storage. If logging is turned on, the transaction is sent to the DDJC Sorter Message Logger (T214.PN). When a message is requested by the Subcontroller Manager, a transaction is retrieved from the DDJC Sorter Input Buffer (T212.PN) and returned to the Subcontroller Manager.

3.2.3.25.2 T212.PN - DDJC Sorter Input Buffer

Process Name	Process ID #	Date
DDJC Sorter Input Buffer	T212.PN	April 23, 2003

Requirement ID #(s)
SECS-RC1.1.9, SECS-RC4.2

Process Narrative

The DDJC Sorter Input Buffer (T212.PN) accepts messages from the DDJC Sorter Interface Manager (T211.PN) and places them in a RAM queue. When a message is requested by the DDJC Sorter Interface Manager (T211.PN), the oldest message in the queue is removed and sent to the DDJC Sorter Interface Manager (T211.PN).

3.2.3.25.3 T213.PN - DDJC Sorter Output Buffer

Process Name	Process ID #	Date
DDJC Sorter Output Buffer	T213.PN	April 23, 2003

Requirement ID #(s)
SECS-RC1.1.9, SECS-RC4.2

Process Narrative

The DDJC Sorter Output Buffer (T213.PN) accepts messages from the DDJC Sorter Interface Manager (T211.PN) and places them in a RAM queue. When a message is requested by the DDJC Sorter Interface Manager (T211.PN), the oldest message in the queue is removed and sent to the DDJC Sorter Interface Manager (T211.PN).

3.2.3.25.4 T214.PN - DDJC Sorter Message Logger

Process Name	Process ID #	Date
DDJC Sorter Message Logger	T214.PN	April 23, 2003

Requirement ID #(s)
SECS-RC1.1.9, SECS-RC4.3

Process Narrative

The DDJC Sorter Message Logger (T214.PN) accepts messages from the DDJC Sorter Interface Manager (T211.PN) and writes them to a disk file.

3.2.3.26 **T22.DFD**

Process ID #	Date
T22.DFD – DDDE Package Conveyor System	September 23, 2003

Requirement ID #(s)

SECS-RC1.1, SECS-RC1.1.9, SECS-RC1.4, SECS-RC3.1, SECS-RC4.2, SECS-RC4.3

Data Flow Diagram

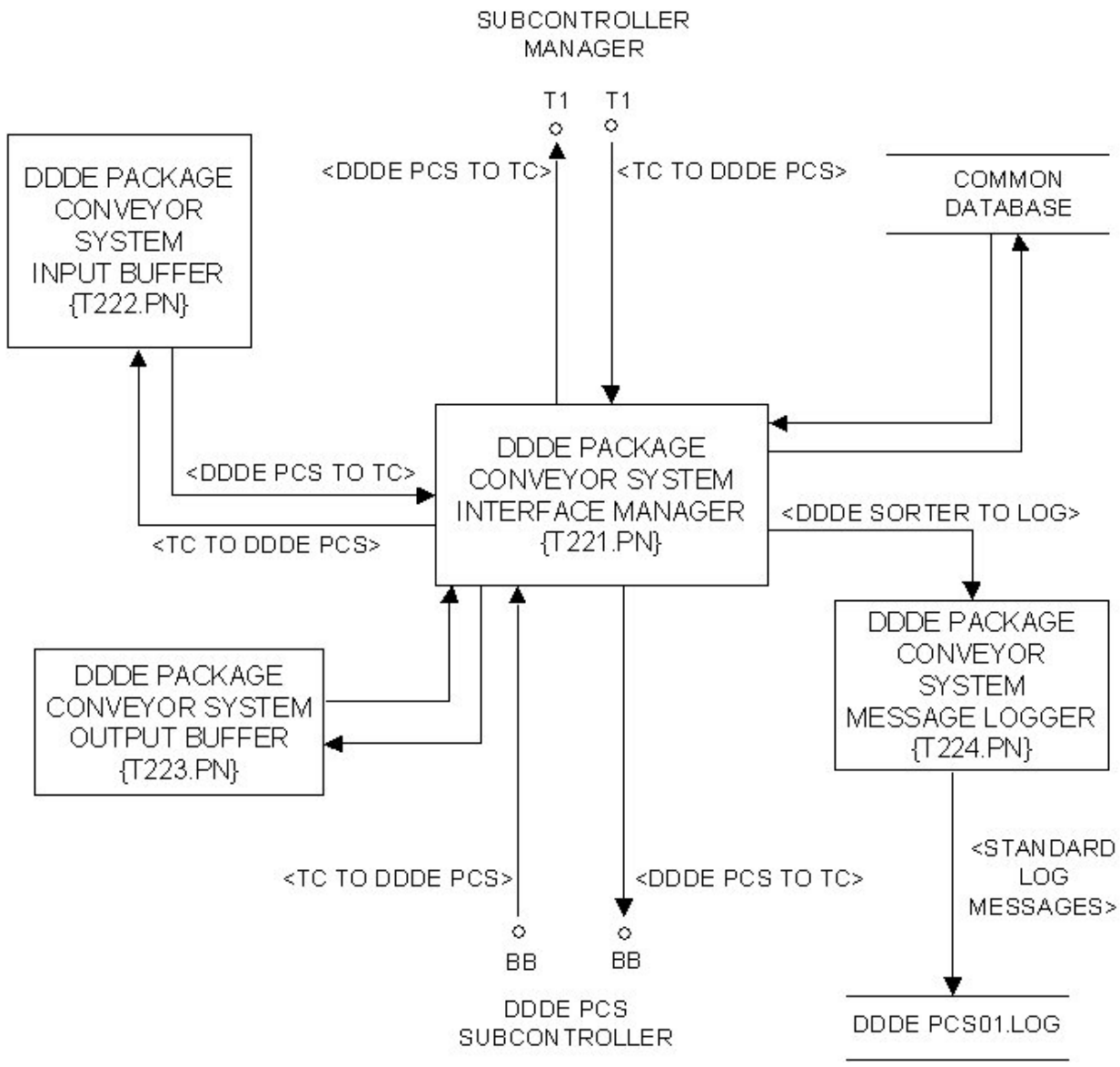

3.2.3.26.1 T221.PN – DDDE PCS Interface Manager

Process Name	Process ID #	Date
DDDE PCS Interface Manager	T221.PN	September 23, 2003

Requirement ID #(s)

SECS-RC1.1, SECS-RC1.1.9, SECS-RC1.4, SECS-RC3.1, SECS-RC4.2, SECS-RC4.3

Process Narrative

The DDDE PCS Interface Manager(T221.PN) accepts transactions from the subcontroller manager, evaluates the messages to select routing to the NV_TOTE process or the AWOS process, formats the message and sends the messages to the NV_TOTE output buffer (T153.PN) or the AWOS output bffer (T113.PN).

The DDDE PCS Interface Manager also accepts transactions from the DDDE PCS Subcontroller, evaluates the messages for routing, formats the messages and sends the messages to the NV_TOTE input buffer (T152.PN) or the AWOS input buffer (T112.PN). If logging is turned on the message is sent to the AWOS Message Logger (T114.PN).

3.2.3.26.2 T222.PN – DDDE PCS Input Buffer

Process Name	Process ID #	Date
DDDE PCS Input Buffer	T222.PN	September 23, 2003

Requirement ID #(s)
SECS-RC1.1.9, SECS-RC4.2

Process Narrative

The DDDE PCS Input Buffer (T222.PN) accepts messages from the DDDE PCS Interface Manager (T221.PN) and relays them to the NV_TOTE Input Buffer (T152.PN) or the AWOS Input Buffer (T112.PN).

3.2.3.26.3 T223.PN – DDDE PCS Output Buffer

Process Name	Process ID #	Date
DDDE PCS Output Buffer	T223.PN	September 23, 2003

Requirement ID #(s)
SECS-RC1.1.9, SECS-RC4.2

Process Narrative

The DDDE PCS Output Buffer (T223.PN) accepts messages from the DDDE Interface Manager (T221.PN) and relays them to the NV_TOTE Output Buffer (T153.PN) or the AWOS Output Buffer (T113.PN).

3.2.4 U.DFD

Process ID #	Date
U.DFD Page 1 of 2	August 18, 2000

Requirement ID #(s)

SECS-RC2.1, SECS-RC2.2, SECS-RC2.3, SECS-RC2.4, SECS-RC2.5, SECS-RC2.6, SECS-RC2.7, SECS-RC2.8, SECS-RC2.9, SECS-RC10, SECS-RC1.1.17

Data Flow Diagram

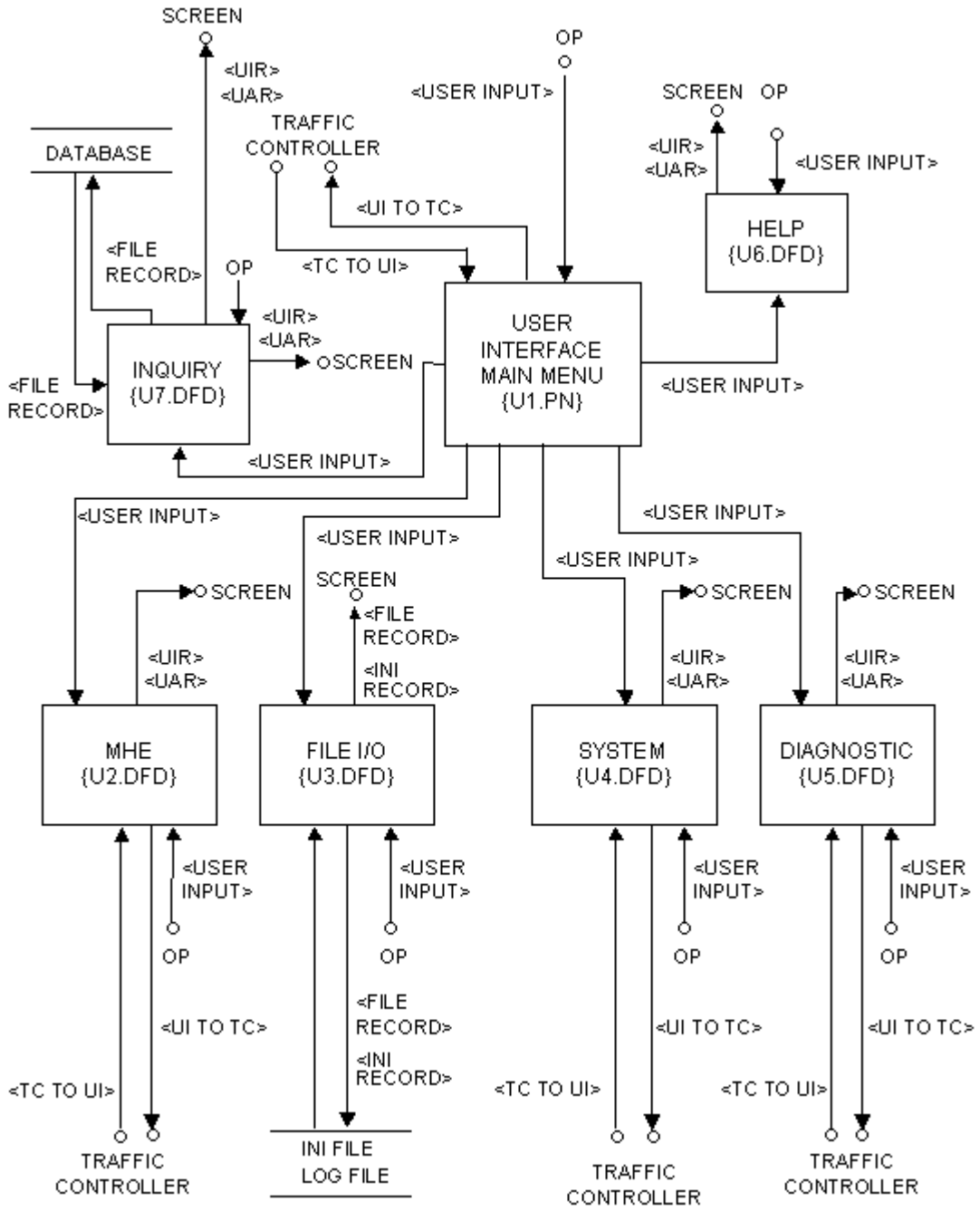

Process ID #	Date
U.DFD User Interface Subcontroller Page 2 of 2	September 18, 2002

Requirement ID #(s)

SECS-RC2.1, SECS-RC2.2, SECS-RC2.3, SECS-RC2.4, SECS-RC2.5, SECS-RC2.6, SECS-RC2.7, SECS-RC2.8, SECS-RC2.9, SECS-RC2.10, SECS-RC2.11, SECS-RC1.1.17

Data Flow Diagram

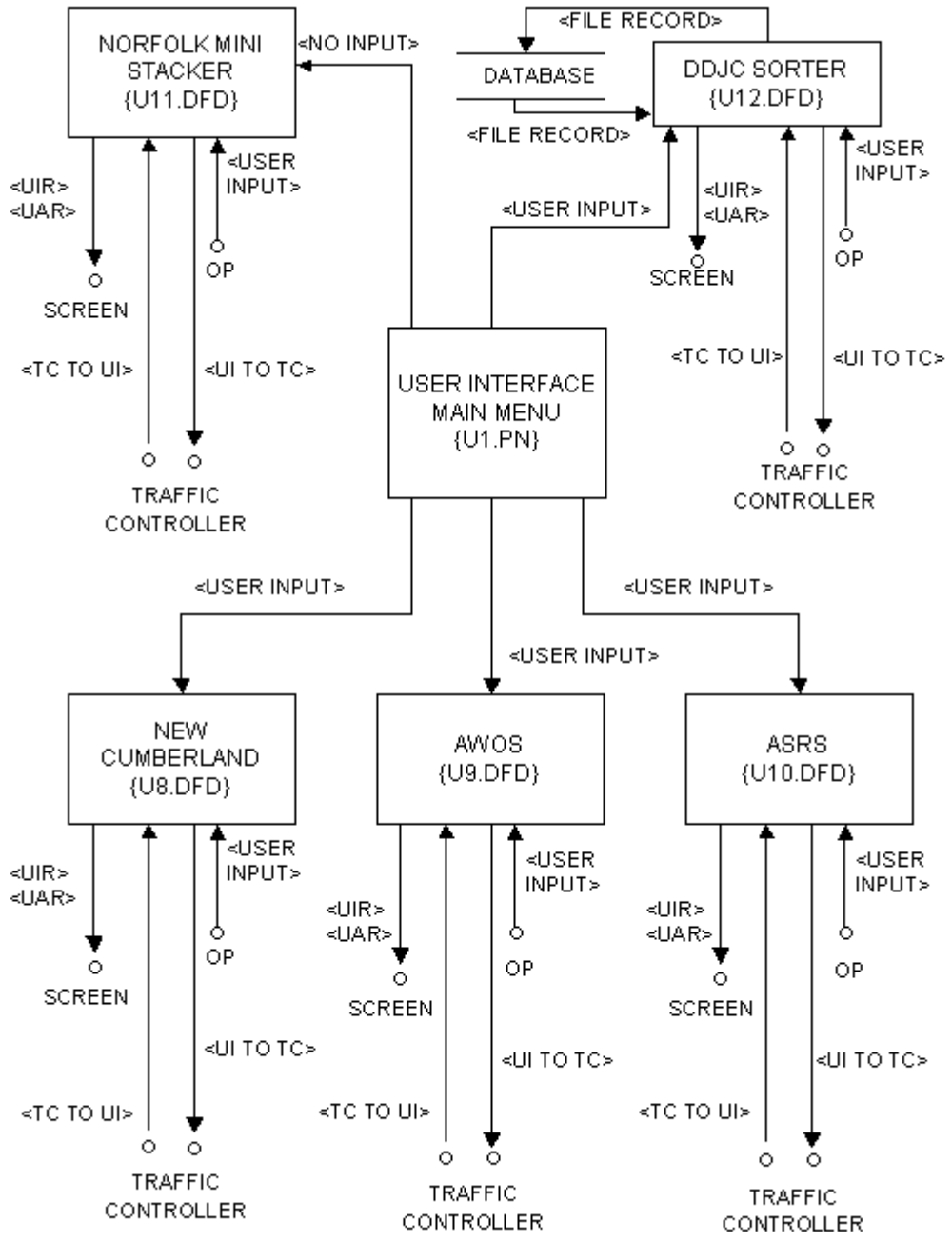

3.2.4.1 U1.PN - User Interface Main Menu

Process Name	Process ID #	Date
User Interface Main Menu	U1.PN	November 6, 1997

Requirement ID #(s)

SECS-RC2.1, SECS-RC2.2, SECS-RC2.3, SECS-RC2.4, SECS-RC2.5, SECS-RC2.6, SECS-RC2.7, SECS-RC2.8, SECS-RC2.9, SECS-RC2.10, SECS-RC2.11

Process Narrative

Via an input from the user, either the MHE, FILE I/O, SYSTEM, DIAGNOSTIC, INQUIRY, CONVEYOR, TOWLINE, SORTATION, TERMINAL, START/STOP CONVEY, FAULT HANDLING, or HELP set of functions can be utilized.

3.2.4.2 U2.DFD

Process ID #	Date
U2.DFD	November 6, 1997

Requirement ID #(s)
SECS-RC2.1, SECS-RC2.2

Data Flow Diagram

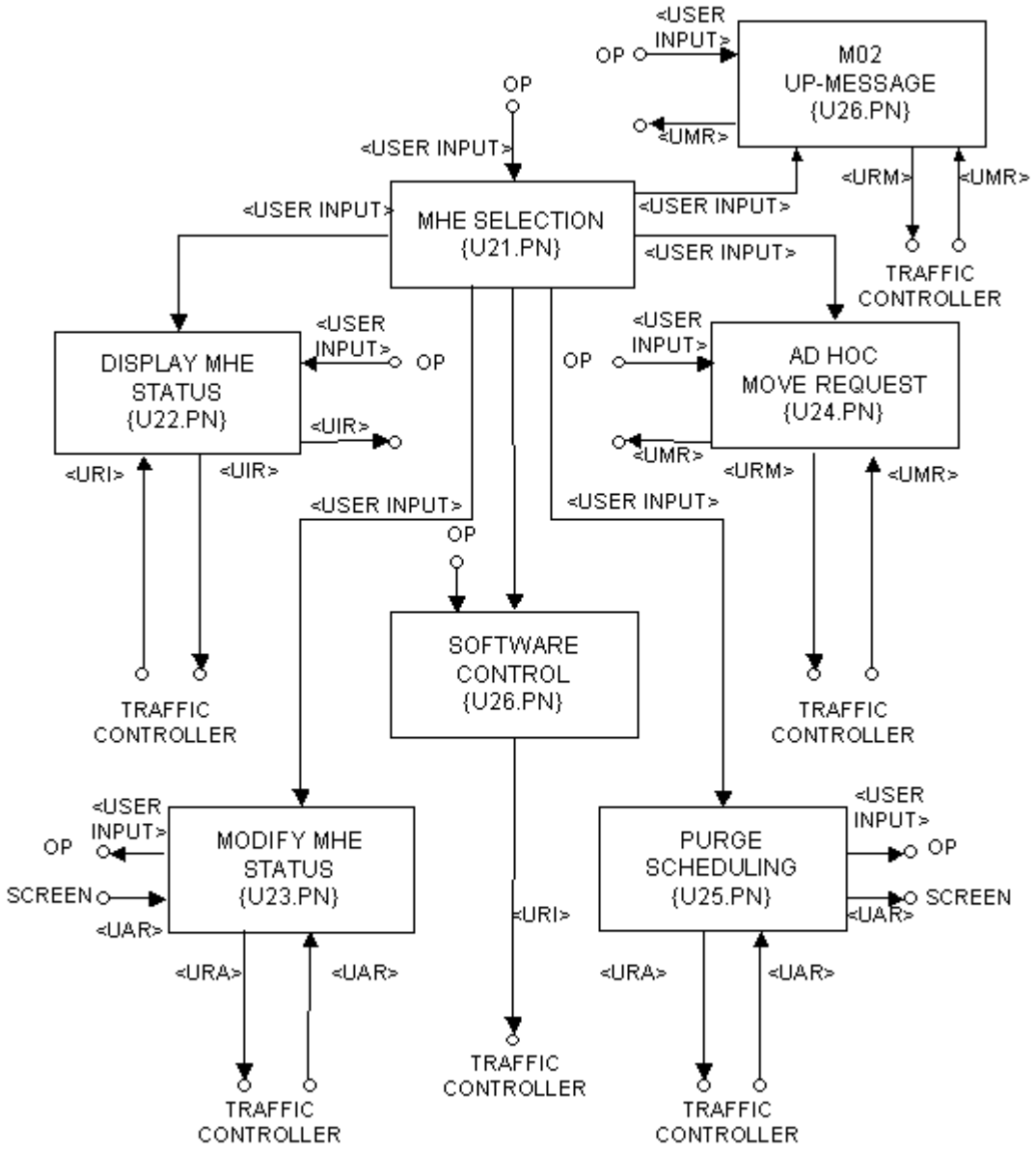

3.2.4.2.1 U21.PN - MHE Selection

Process Name	Process ID #	Date
MHE Selection	U21.PN	November 6, 1997

Requirements ID #(s)

SECS-RC2.1, SECS-RC2.2, SECS-RC2.3, SECS-RC2.5, SECS-RC2.9, SECS-RC2.10, SECS-RI10

Process Narrative

Via an input from the user, the MHE selection from the ECS bar menu produces a dialog box containing the:

- Display MHE Status (U22.PN),
- Update MHE Status (U23.PN),
- Ad Hoc Move Request (U24.PN),
- Purge Scheduling (U25.PN);
- and Software Control (U26.PN) selections.

3.2.4.2.2 U22.PN - Display MHE Status

Process Name	Process ID #	Date
Display MHE Status	U22.PN	November 6, 1997

Requirements ID #(s)
SECS-RC2.1, SECS-RC2.2, SECS-RI10

Process Narrative

Via an input from the user, the status of MHE hardware, software, and/or workstations will be displayed depending on which subcontroller was selected from the dialog box containing the device names. There may be subsequent dialog boxes requesting more information to make the status request, depending on the subcontroller selected.

3.2.4.2.3 U23.PN - Modify MHE Status

Process Name	Process ID #	Date
Modify MHE Status	U23.PN	November 6, 1997

Requirements ID #(s)
SECS-RC2.1, SECS-RC2.2, SECS-RI10

Process Narrative

After selecting a subcontroller and checking the Update checkbox, either a subsequent dialog box appears for more user input or an initialize message is sent to the selected subcontroller.

3.2.4.2.4 U24.PN - Ad Hoc Move Request

Process Name	Process ID #	Date
Ad Hoc Move Request	U24.PN	November 6, 1997

Requirements ID #(s)
SECS-RC2.1, SECS-RC2.3, SECS-RI10

Process Narrative

Via an input from the user, input fields will enable the user to send a move request to the Subcontroller System, via the Traffic Controller.

3.2.4.2.5 U25.PN - Purge Scheduling

Process Name	Process ID #	Date
Purge Scheduling	U25.PN	November 6, 1997

Requirements ID #(s)
SECS-RC2.1, SECS-RC2.9, SECS-RC2.10, SECS-RI10

Process Narrative

Purge Scheduling allows the user to purge a location on the selected subcontroller.

3.2.4.2.6 U26.PN - M02 Up-Message Function

Process Name	Process ID #	Date
M02 Up-Message	U26.PN	April 21, 1999

Requirement ID #(s)

SECS-RC2.1, SECS-RC2.2, SECS-RC2.3, SECS-RC2.10, SECS-RI10, SECS-RC1.1.17

Process Narrative

Via an input from the user, input fields will enable the user to send a move request to the Subcontroller System, via the Traffic controller.

3.2.4.3 U3.DFD

Process ID #	Date
U3.DFD	November 6, 1997

Requirement ID #(s)
SECS-RC2.1, SECS-RC2.4, SECS-RC2.9

Data Flow Diagram

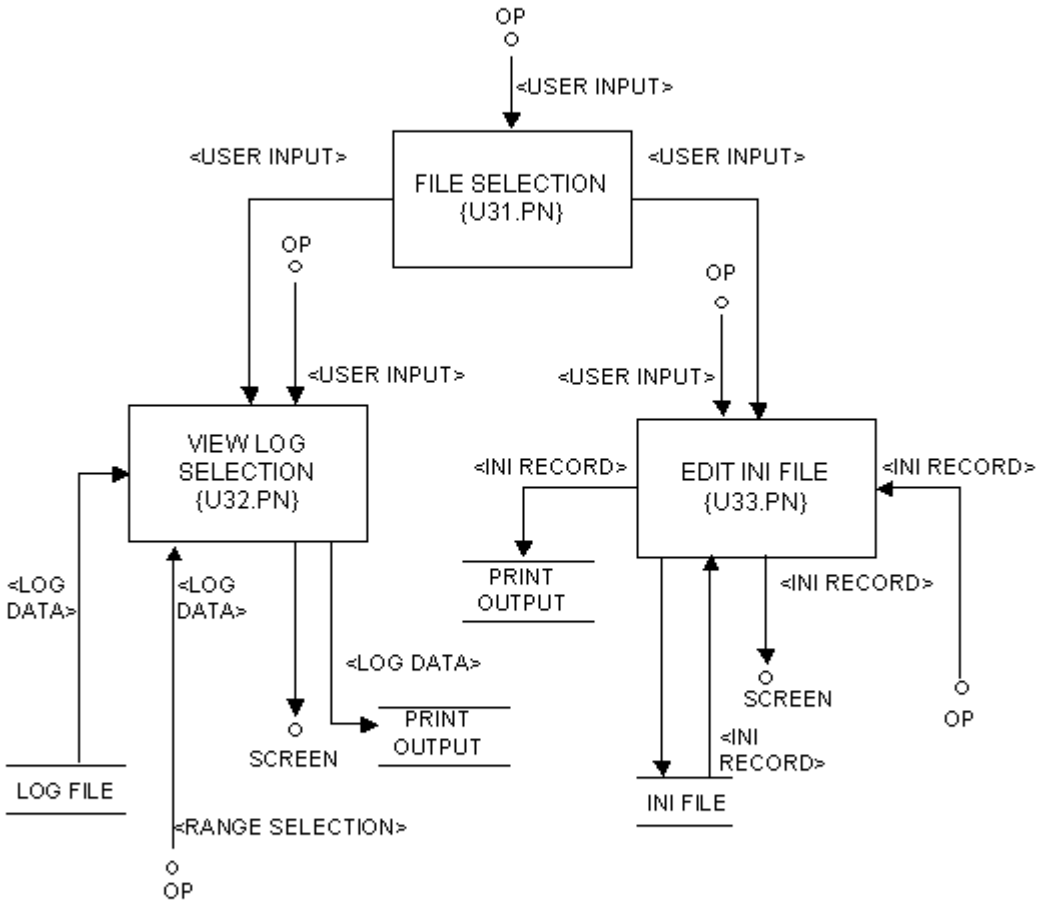

3.2.4.3.1 U31.PN - File Selection

Process Name	Process ID #	Date
File Selection	U31.PN	November 6, 1997

Requirements ID #(s)
SECS-RC2.1, SECS-RC2.4, SECS-RC2.8, SECS-RC2.9, SECS-RI10

Process Narrative

Via input from the user, a dialog box will enable the user to select logs to view, and ECS system initialization files to edit.

3.2.4.3.2 U32.PN - View Log Selection

Process Name	Process ID #	Date
View Log Selection	U32.PN	November 6, 1997

Requirements ID #(s)
SECS-RC2.1, SECS-RC2.4, SECS-RI10

Process Narrative

Log files can be viewed in their entirety, or searched on SMM field exact matches, SMM field exact match ranges, or occurrence of any search string. Log search results are brought up in Notepad which allows the data to be saved to disk or printed to attached or network printers.

3.2.4.3.3 U33.PN - Edit INI File

Process Name	Process ID #	Date
Edit INI File	U33.PN	November 6, 1997

Requirements ID #(s)
SECS-RC2.1, SECS-RC2.8, SECS-RC2.9, SECS-RI10

Process Narrative

Via input from the user, an INI file is selected from a listbox of available INI files and brought up in Notepad for editing or printing.

3.2.4.4 U4.DFD

Process ID #	Date
U4.DFD	November 6, 1997

Requirement ID #(s)
SECS-RC2.1, SECS-RC2.5, SECS-RC2.6, SECS-RC2.7

Data Flow Diagram

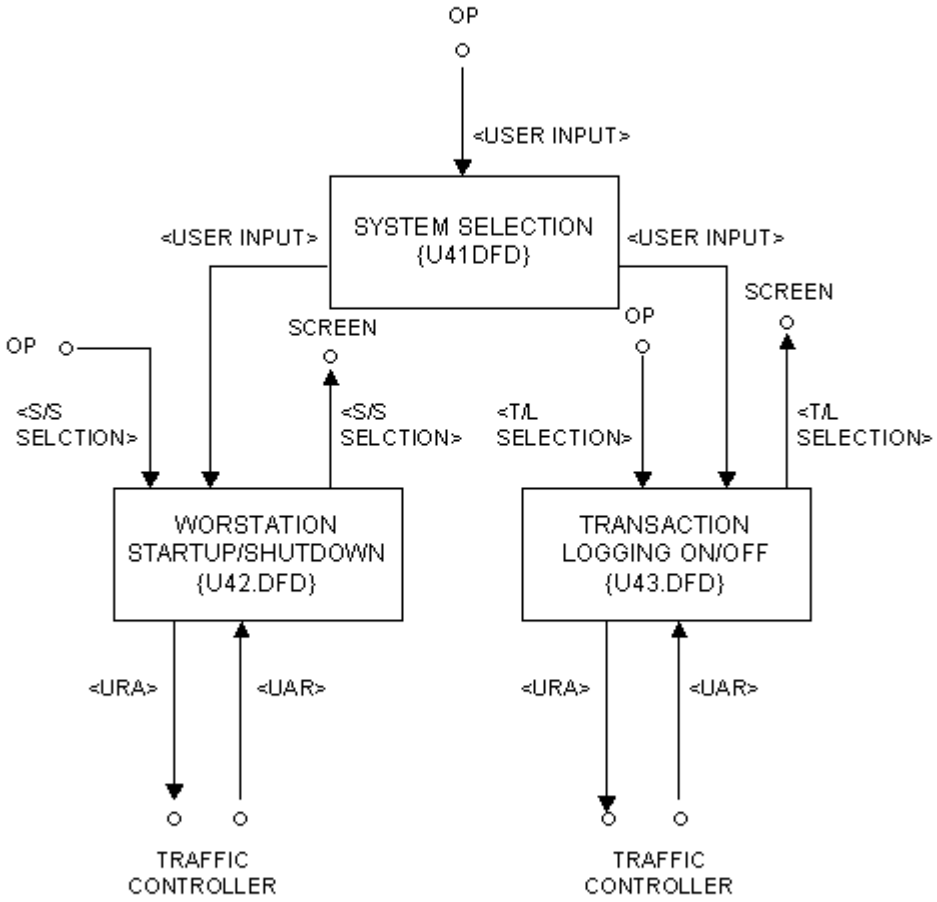

3.2.4.4.1 U41.PN - System Selection

Process Name	Process ID #	Date
System Selection	U41.PN	November 6, 1997

Requirements ID #(s)
SECS-RC2.1, SECS-RC2.5, SECS-RC2.6, SECS-RC2.7, SECS-RI10

Process Narrative

Via input from the user, a dialog box enables the user to Startup or Shutdown workstations on the selected subcontroller (U42.PN), or turn Transaction Logging for the selected subcontroller ON or OFF (U43.PN).

3.2.4.4.2 U42.PN - Workstation Startup/Shutdown

Process Name	Process ID #	Date
Workstation Startup/ Shutdown	U42.PN	November 6, 1997

Requirements ID #(s)
SECS-RC2.1, SECS-RC2.6, SECS-RI10

Process Narrative

Via input from the user, workstations on the selected subcontroller can be started or shutdown.

3.2.4.4.3 U43.PN - Transaction Logging ON/OFF

Process Name	Process ID #	Date
Transaction Logging ON/OFF	U43.PN	November 6, 1997

Requirements ID #(s)
SECS-RC2.1, SECS-RC2.5, SECS-RI10

Process Narrative

The ability to save transactions (Logging) can be turned ON or OFF for the selected subcontroller.

3.2.4.5 U5.DFD

Process ID #	Date
U5.DFD	November 6, 1997

Requirement ID #(s)
SECS-RC2.1, SECS-RC2.8

Data Flow Diagram

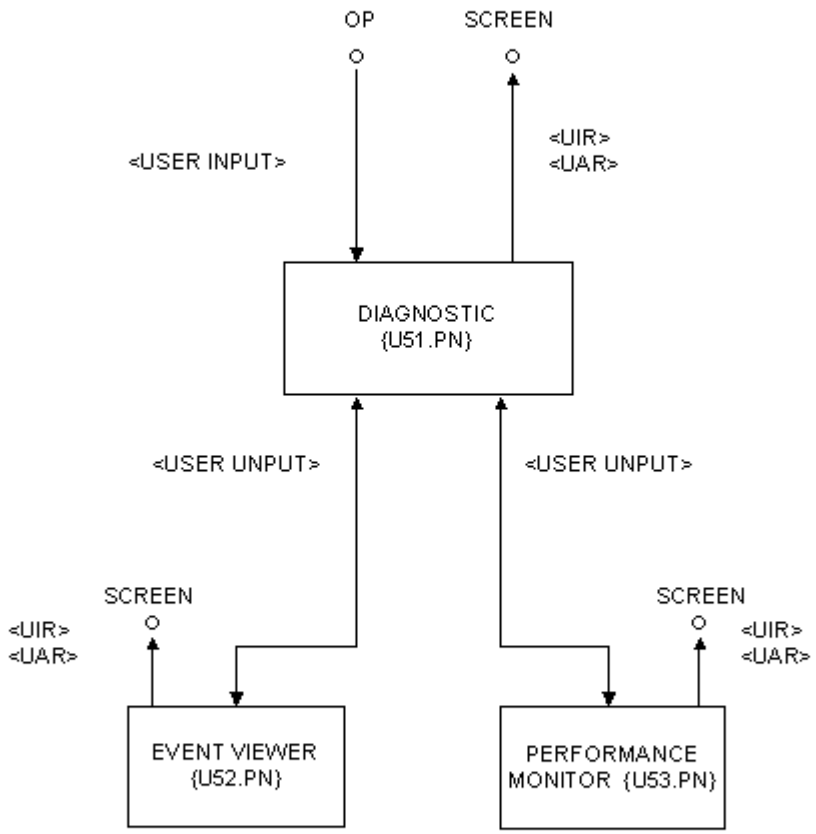

3.2.4.5.1 U51.PN - Diagnostic

Process Name	Process ID #	Date
Diagnostic	U51.PN	November 6, 1997

Requirements ID #(s)
SECS-RC2.1, SECS-RC2.7, SECS-RC2.8, SECS-RI10

Process Narrative

The Diagnostic Selection allows a qualified user to use NT's Event Viewer or NT's Performance Monitor.

3.2.4.5.2 **U52.PN - Event Viewer**

Process Name	Process ID #	Date
Event Viewer	U52.PN	November 6, 1997

Requirements ID #(s)
SECS-RC2.1, SECS-RC2.8, SECS-RI10

Process Narrative

Windows NT Event Viewer should be used only by qualified personnel. For instructions see Windows NT manuals.

3.2.4.5.3 U53.PN - Performance Monitor

Process Name	Process ID #	Date
Performance Monitor	U53.PN	November 6, 1997

Requirements ID #(s)
SECS-RC2.1, SECS-RC2.8, SECS-RI10

Process Narrative

Windows NT Performance Monitor should be used only by qualified personnel. For instructions see Windows NT manuals.

3.2.4.6 U6.DFD

Process ID #	Date
U6.DFD	November 6, 1997

Requirement ID #(s)

SECS-RC2.1, SECS-RC2.2, SECS-RC2.3, SECS-RC2.4, SECS-RC2.5, SECS-RC2.6, SECS-RC2.7, SECS-RC2.8, SECS-RC2.9, SECS-RC10

Data Flow Diagram

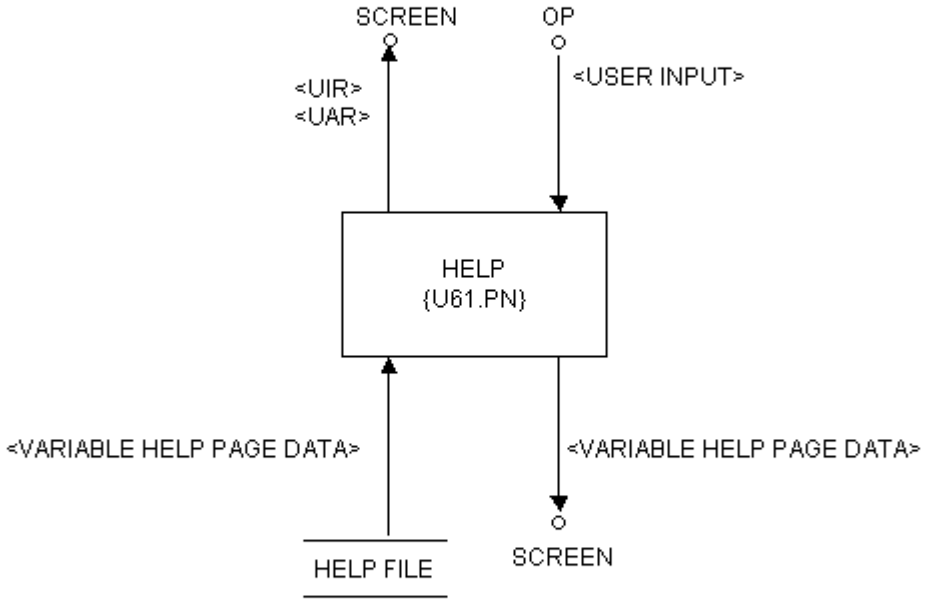

3.2.4.6.1 U61.PN - Help

Process Name	Process ID #	Date
Help	U61-PN	November 6, 1997

Requirements ID #(s)

SECS-RC2.1, SECS-RC2.2, SECS-RC2.3, SECS-RC2.4, SECS-RC2.5, SECS-RC2.6, SECS-RC2.7, SECS-RC2.8, SECS-RC2.9, SECS-RC2.10, SECS-RI10

Process Narrative

Context sensitive help is available in the ECS User Interface help selection.

3.2.4.7 U7.DFD

Process ID #	Date
U7.DFD	November 6, 1997

Requirement ID #(s)
SECS-RC2.1, SECS-RC2.2

Data Flow Diagram

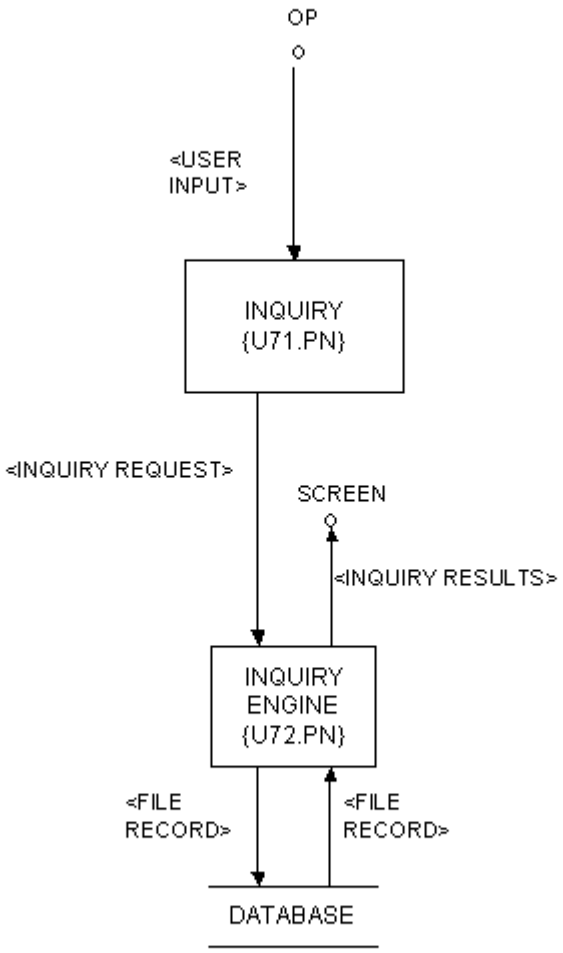

3.2.4.7.1 U71.PN - Inquiry

Process Name	Process ID #	Date
Inquiry	U71.PN	November 6, 1997

Requirements ID #(s)
SECS-RC2.1, SECS-RC2.2, SECS-RI10

Process Narrative

The Inquiry dialog box is a centralized starting point for all ECS Database Inquiries. Inquires can be specified 'All' or 'Single'. The 'All' selection searches the database for all occurrences for the device specified. The 'Single' selection will return information only for the current or active record of the device specified.

3.2.4.8 **U8.DFD**

Process ID #	Date
U8.DFD - New Cumberland Modules	November 6, 1997

Requirement ID #(s)

SECS-RC2.1, SECS-RC2.2, SECS-RC2.3, SECS-RC2.4, SECS-RC2.5, SECS-RC2.6, SECS-RC2.7, SECS-RC2.8, SECS-RC2.9, SECS-RC2.10, SECS-RC2.11

Data Flow Diagram

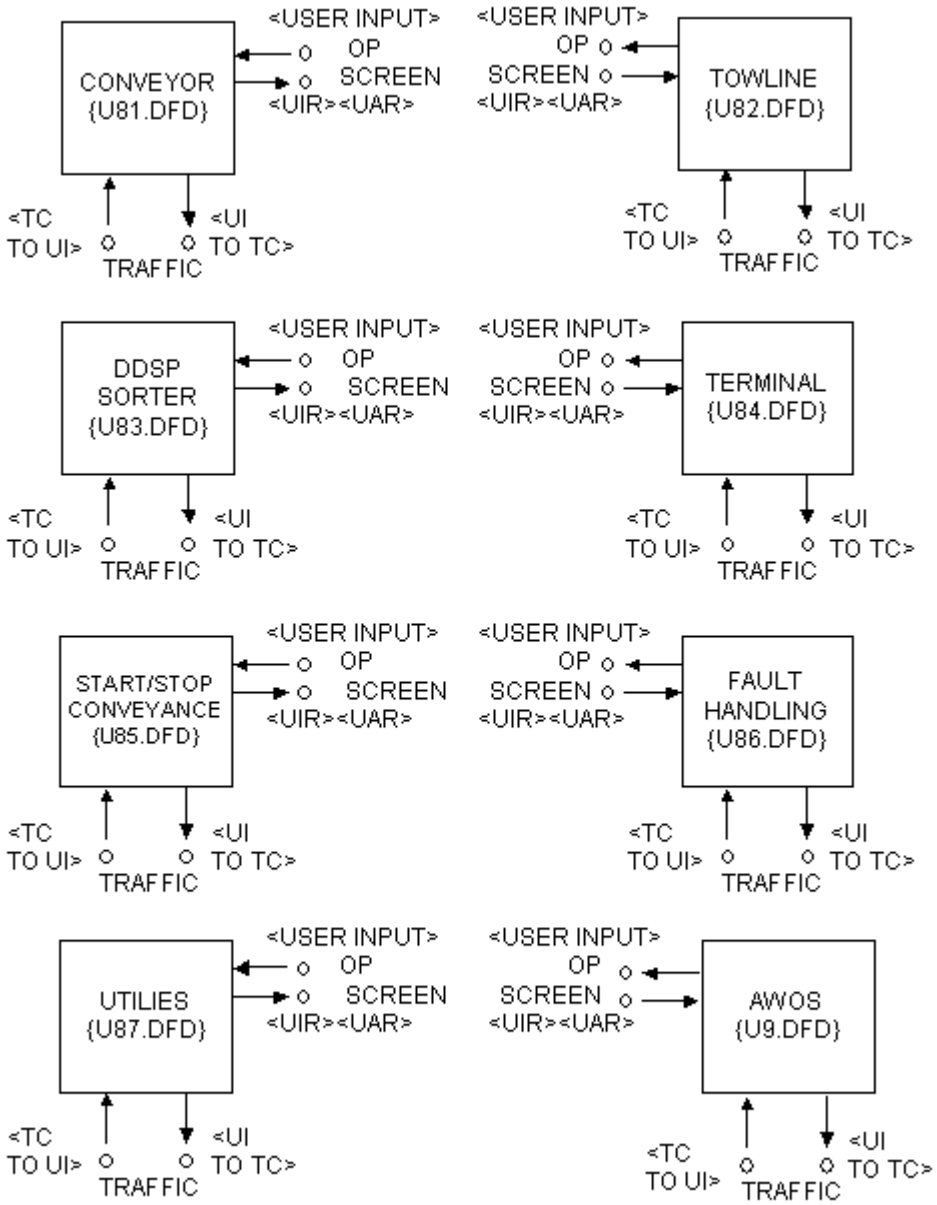

3.2.4.8.1 **U81.DFD**

Process ID #	Date
U81.DFD - Conveyor Page 1 of 2	November 6, 1997

Requirement ID #(s)
SECS-RC2.1, SECS-RC2.2, SECS-RC2.7, SECS-RC2.11

Data Flow Diagram

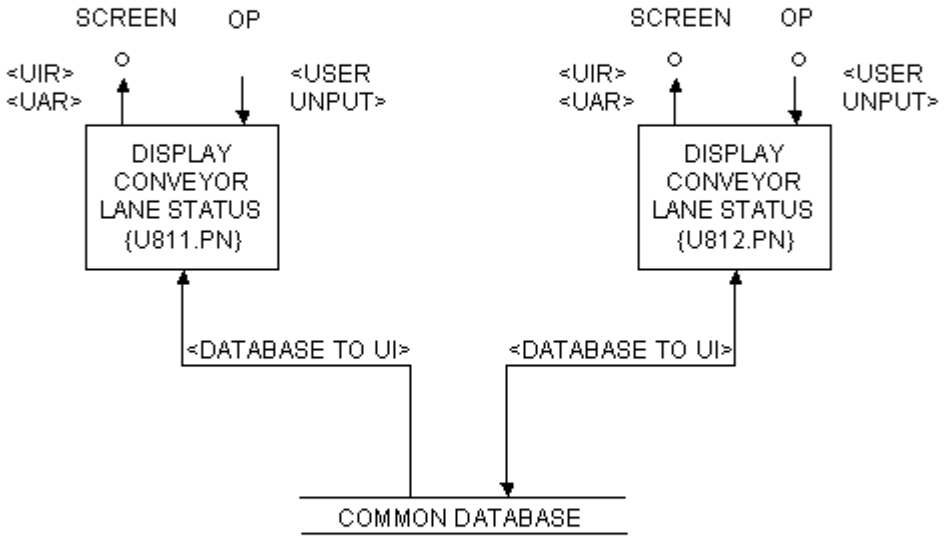

Process ID #	Date
U81.DFD - Conveyor Page 2 of 2	November 6, 1997

Requirement ID #(s)
SECS-RC2.1, SECS-RC2.2, SECS-RC2.7, SECS-RC2.11

Data Flow Diagram

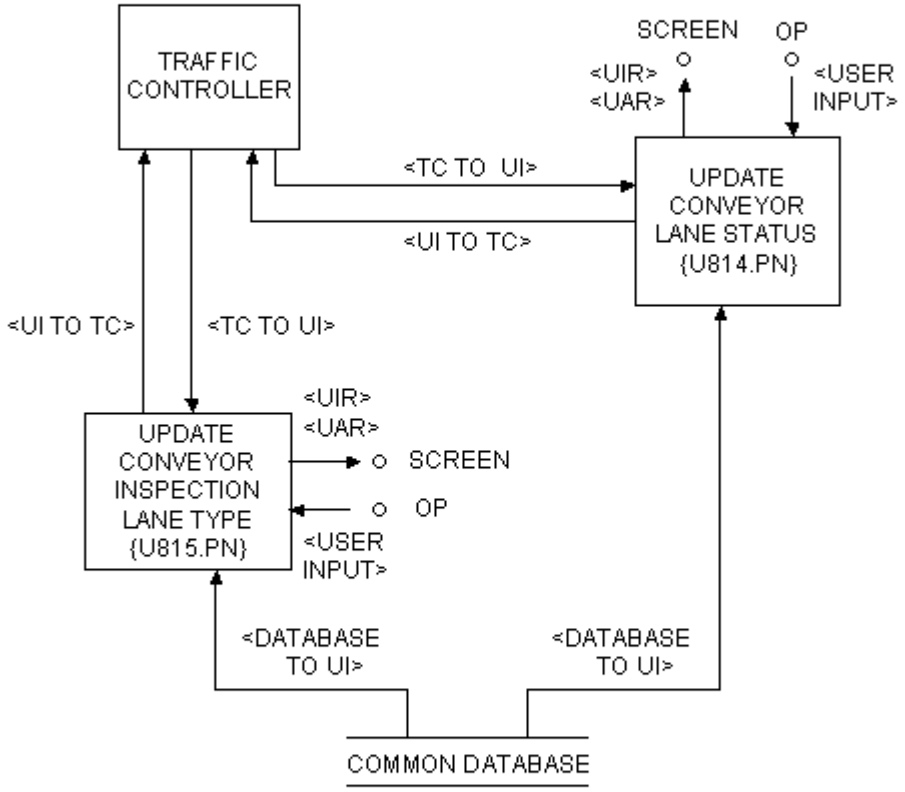

U81 - Conveyor Menu

Figure 3.2.4.8.1-1 Conveyor Menu

Overview

The conversations on the Conveyor System Menu are used to manage the movement of material transported on the tote and pallet conveyors. Display conversations are used to monitor the activity of the conveyors. They display lane statuses and workloads. Data entry conversations are used to update the tote conveyor parameters that control tote distribution and routing. They allow user to unlock a workstation, to update the logical statuses of the conveyor lanes, and to change functions of the inspection lanes.

Display Conveyor Lane Status	Displays workarea functions, Conveyance Lane, Logical Status and Intradepot Lanes for Receiving, Storage and Sortation / Consolidation and Packing areas.
Update Conveyor Lane Status	Changes the logical status of a tote conveyor lane(s) in an area from "active" to "inactive" and vice versa. Or if the area selected is active item/walk and pick, changes the current error lane.
Update Conveyor Inspection Lane Type	Notifies the ECS that a different type of inspection will be performed at one or more tote conveyor lanes in the receiving inspection area.

3.2.4.8.1.1 U811.PN - Display Conveyor Lane Status

Process Name	Process ID #	Date
Display Conveyor Lane Status	U811.PN	November 6, 1997

Requirement ID #(s)
SECS-RC2.2

Process Narrative

This process is used to display the logical status of the tote conveyor lanes. The first screen shown will allow the user to choose either the active item/walk and pick, the receiving area, the storage area, or the sortation/consolidation and packing area. After the functional area has been selected, this process will query the database for information. If active item/walk and pick is selected the screen will display lane number, status and current error lane. All other selections display the workstation function (mnemonic), the conveyor lane id, and the logical status of the lane. In addition, this process will display the status of the lanes at Intradepot Receiving. The logical status will either be on-line, or inactive. The status of the Intradepot receiving lanes will be either inbound, outbound, or not applicable.

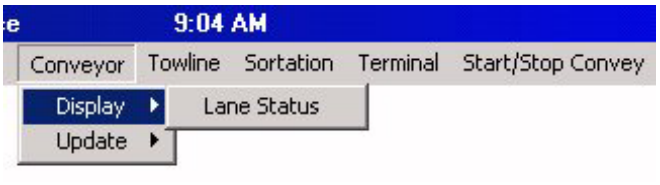

Figure 3.2.4.8.1.1-1 Conveyor Display Menu

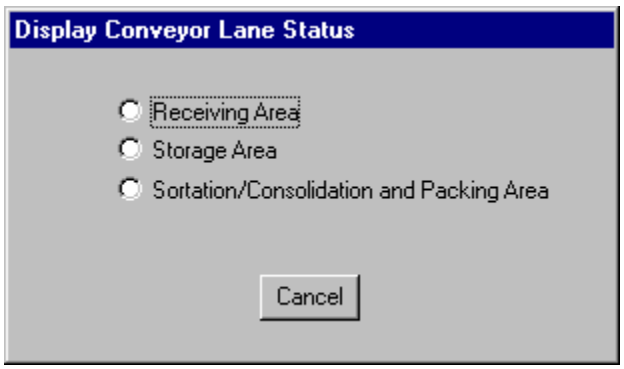

Figure 3.2.4.8.1.1-2 Display Conveyor Lane Status (Screen 1)

U811.PN - Display Conveyor Lane Status (Continued)

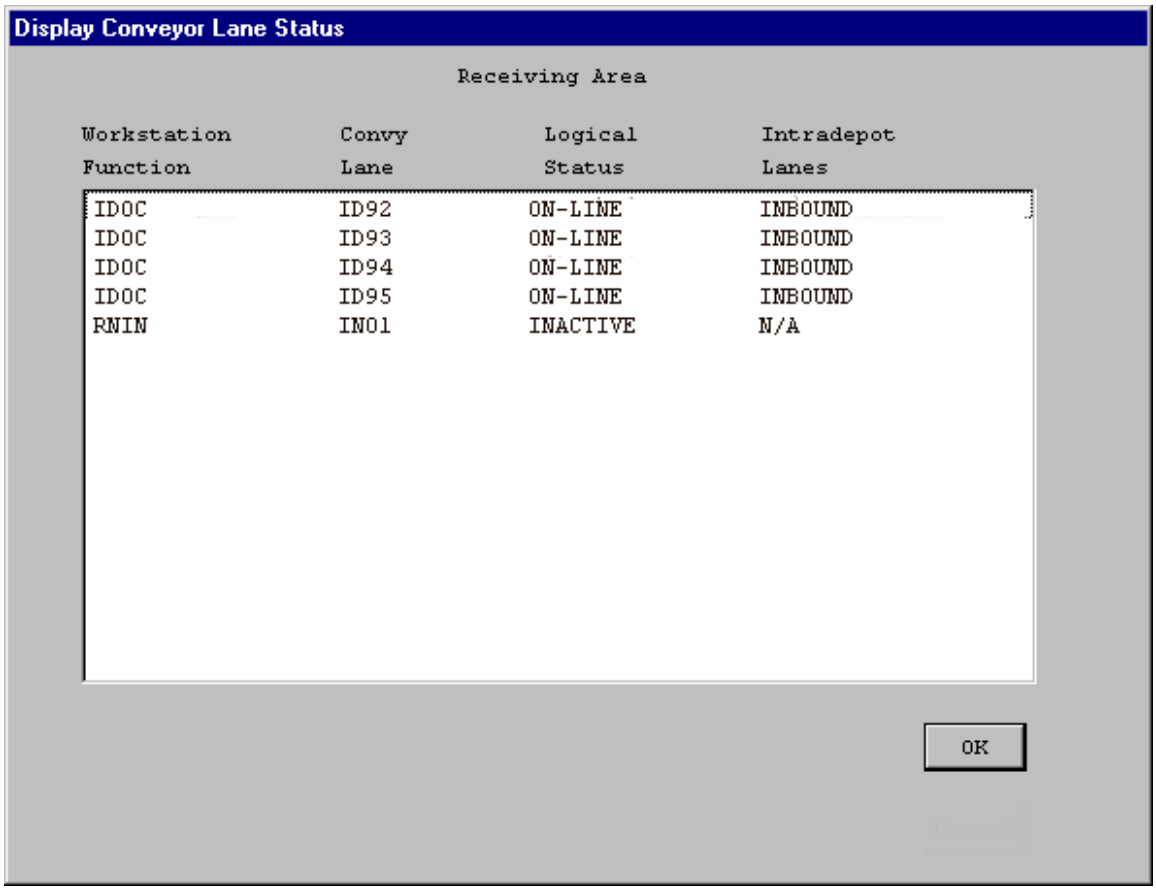

Figure 3.2.4.8.1.1-3 Display Conveyor Lane Status (Screen 2)

Description

Display Conveyor Lane Status is used to display the logical status of tote conveyor lanes, and the direction of the pallet conveyors in Intradepot Receiving.

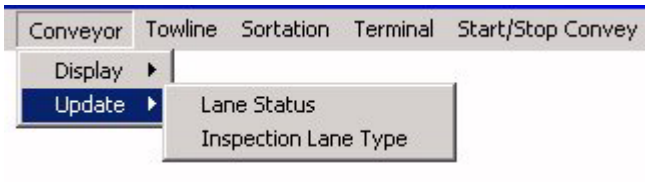

Figure 3.2.4.8.1.1-4 Update Conveyor Lane Menu

Figure 3.2.4.8.1.1-5 Update Conveyor Lane Status (Screen 1)

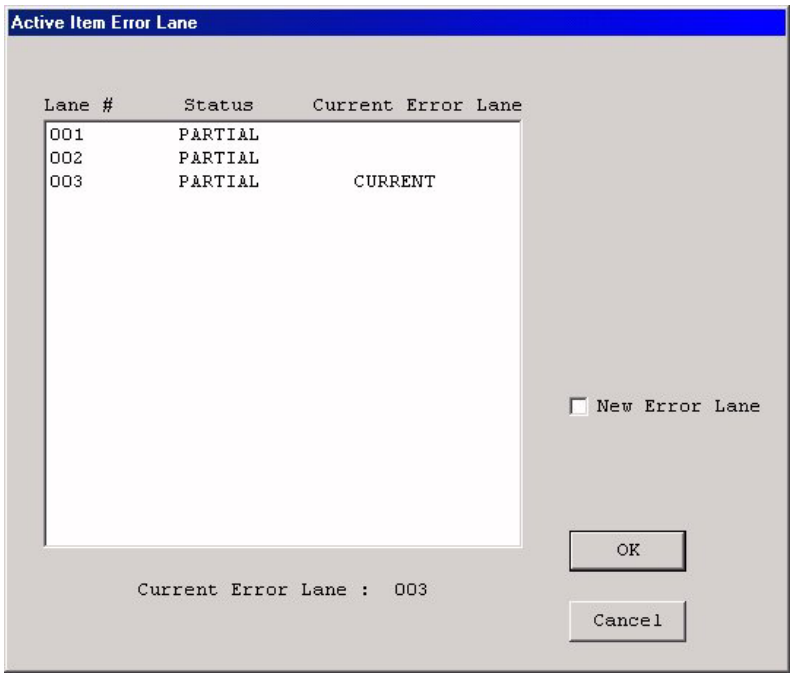

Figure 3.2.4.8.1.1-6 Update Conveyor Lane Status (Screen 2a) Active Item Error Lane

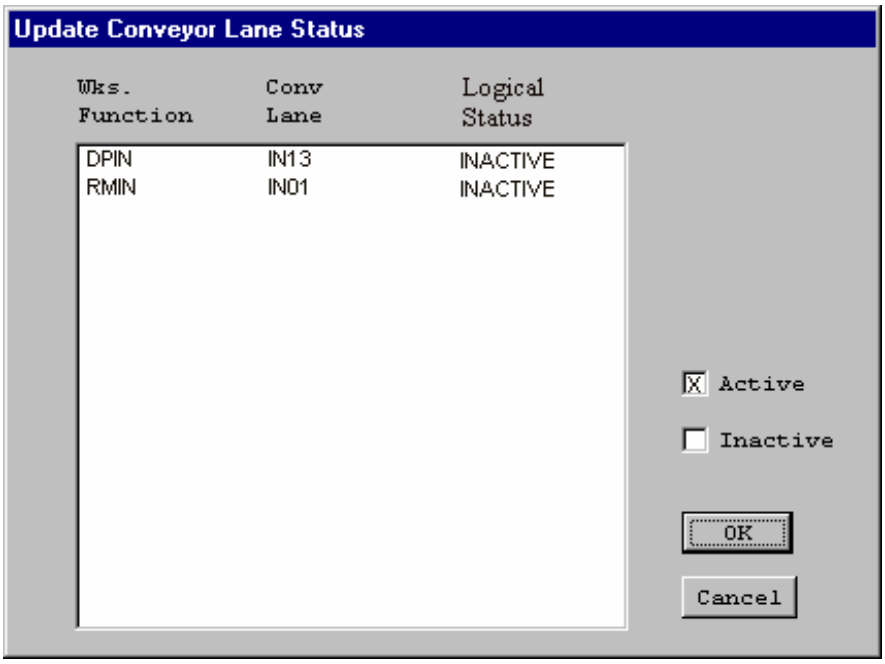

Figure 3.2.4.8.1.1-7 Update Conveyor Lane Status (Screen 2b)

Description

Update Conveyor Lane Status is used to change the logical status in the ECS of one or more tote conveyor lanes. This conversation can be used to help distribute the EDC workload among the conveyor lanes. The User specifies the area (Active Item/Walk and Pick, Receiving, Storage or Sortation/Consolidation and Packing) of the lanes to be changed.

The user can change the status of a spur(s) from "active" (will accept totes) to "inactive" (will not accept totes) and vice versa as the workload changes. Or if the area selected is active item/walk and pick, changes the current error lane . When the ECS is started, the initial status of each lane will be the same as it was when the ECS was last shut down.

3.2.4.8.1.2 U815.PN - Update Conveyor Inspection Lane Type

Process Name	Process ID #	Date
Update Conveyor Inspection Lane Type	U815.PN	November 6, 1997

Requirement ID #(s)
SECS-RC2.8, SECS-RC2.11

Process Narrative

This process is used to change the type of inspection that is being performed at a particular tote conveyor lane in the receiving area. This process will allow the user to choose a lane(s) and to choose the type of inspection to be performed at the lane(s). This process will then format and send a message (J75) to the Tote Conveyor Subcontroller (F.DFD) via the Traffic Subcontroller (T.DFD).

U815.PN - Update Conveyor Inspection Lane Type

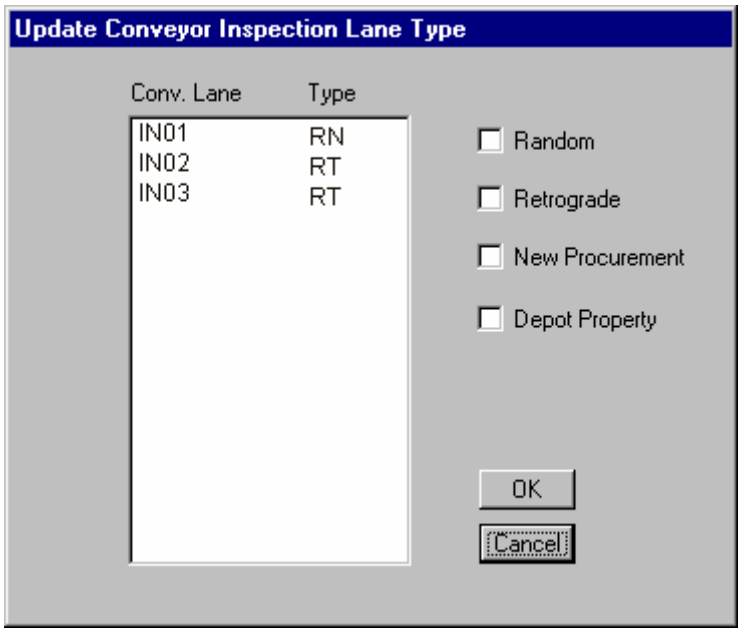

Figure 3.2.4.8.1.2-1 Update Conveyor Inspection Lane Type

Description

Update Conveyor Inspection Lane Type is used to notify the ECS that a different type of inspection will be performed at a tote conveyor lane(s) in the receiving inspection area.

3.2.4.8.2 **U82.DFD**

Process ID #	Date
U82.DFD - Towline Page 1 of 5	November 6, 1997

Requirement ID #(s)

SECS-RC2.1, SECS-RC2.2, SECS-RC2.3, SECS-RC2.4, SECS-RC2.5, SECS-RC2.6, SECS-RC2.7, SECS-RC2.8, SECS-RC2.9, SECS-RC2.10, SECS-RC2.11

Data Flow Diagram

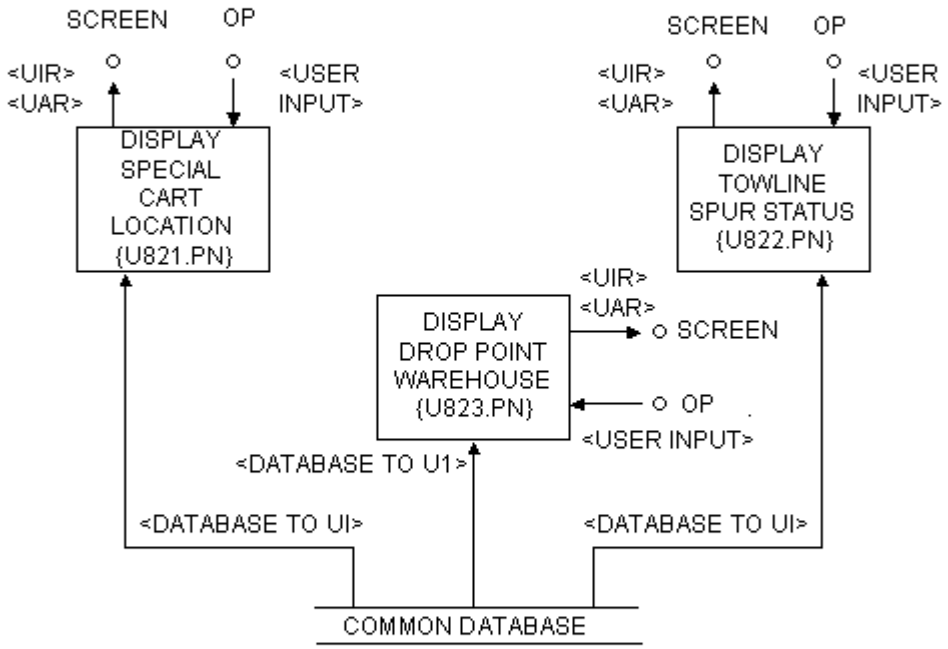

Process ID #	Date
U82.DFD - Towline Page 2 of 5	November 6, 1997

Requirement ID #(s)

SECS-RC2.1, SECS-RC2.2, SECS-RC2.3, SECS-RC2.4, SECS-RC2.5, SECS-RC2.6, SECS-RC2.7, SECS-RC2.8, SECS-RC2.9, SECS-RC2.10, SECS-RC2.11

Data Flow Diagram

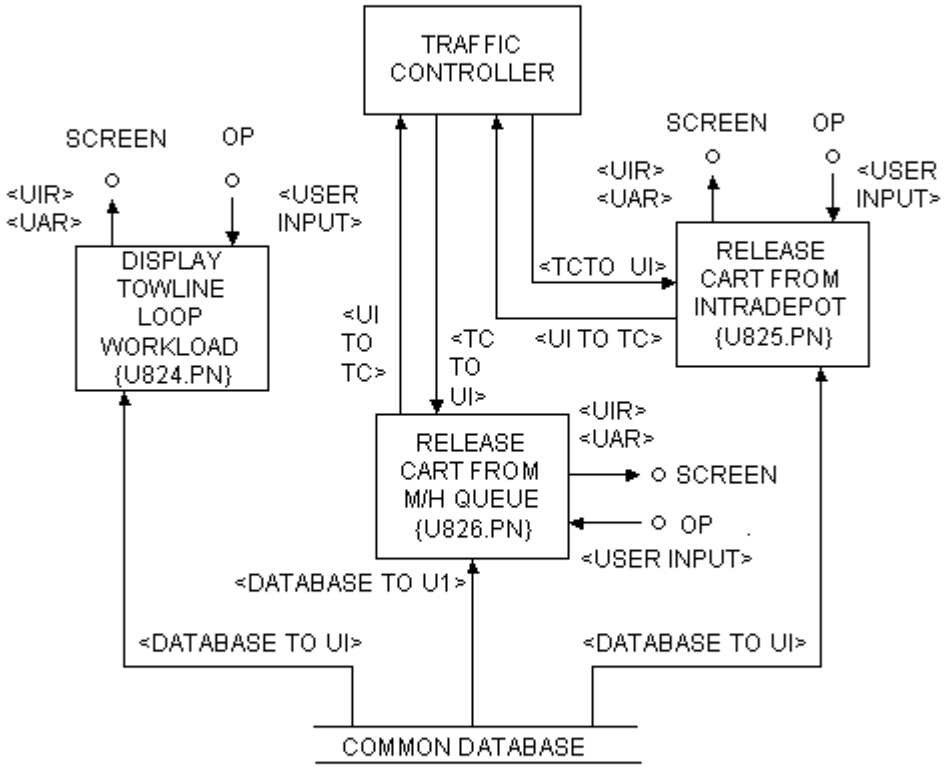

Process ID #	Date
U82.DFD - Towline Page 3 of 5	November 6, 1997

Requirement ID #(s)

SECS-RC2.1, SECS-RC2.2, SECS-RC2.3, SECS-RC2.4, SECS-RC2.5, SECS-RC2.6, SECS-RC2.7, SECS-RC2.8, SECS-RC2.9, SECS-RC2.10, SECS-RC2.11

Data Flow Diagram

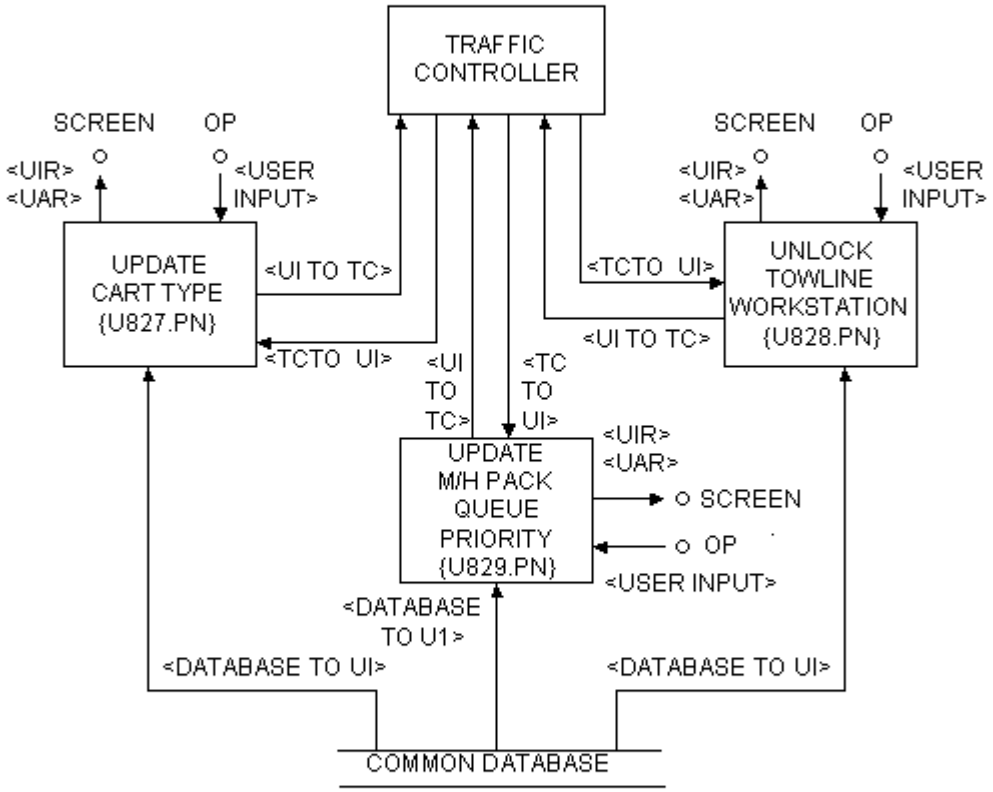

Process ID #	Date
U82.DFD - Towline Page 4 of 5	November 6, 1997

Requirement ID #(s)

SECS-RC2.1, SECS-RC2.2, SECS-RC2.3, SECS-RC2.4, SECS-RC2.5, SECS-RC2.6, SECS-RC2.7, SECS-RC2.8, SECS-RC2.9, SECS-RC2.10, SECS-RC2.11

Data Flow Diagram

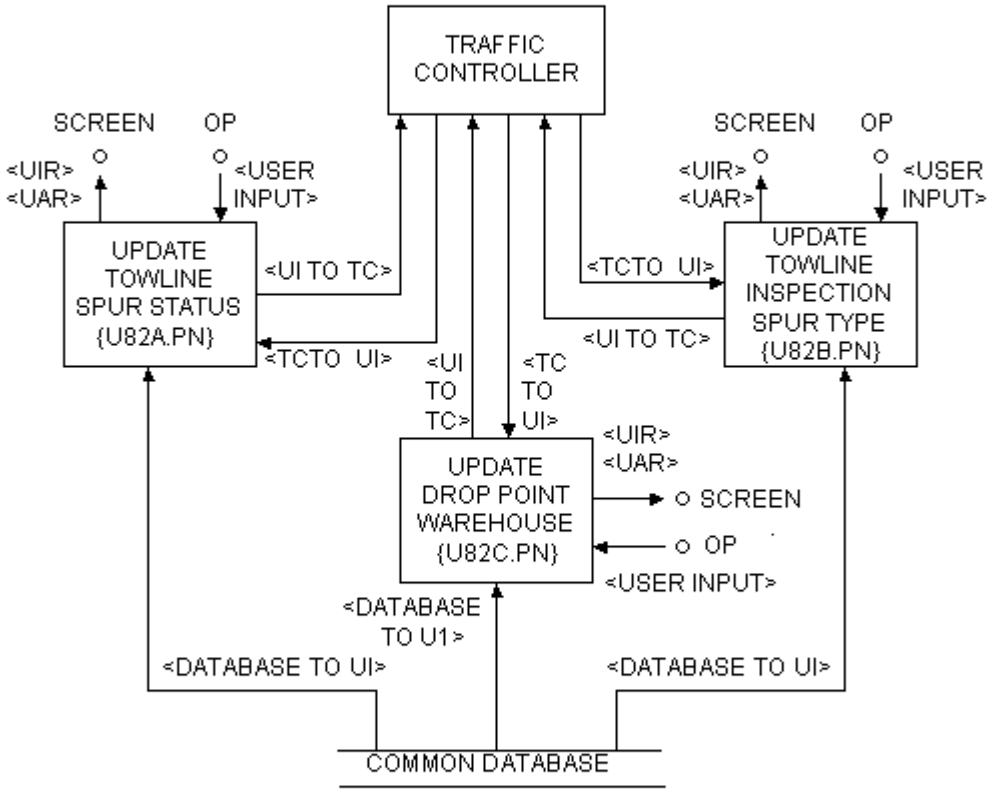

Process ID #	Date
U82.DFD - Towline Page 5 of 5	November 6, 1997

Requirement ID #(s)

SECS-RC2.1, SECS-RC2.2, SECS-RC2.3, SECS-RC2.4, SECS-RC2.5, SECS-RC2.6, SECS-RC2.7, SECS-RC2.8, SECS-RC2.9, SECS-RC2.10, SECS-RC2.11

Data Flow Diagram

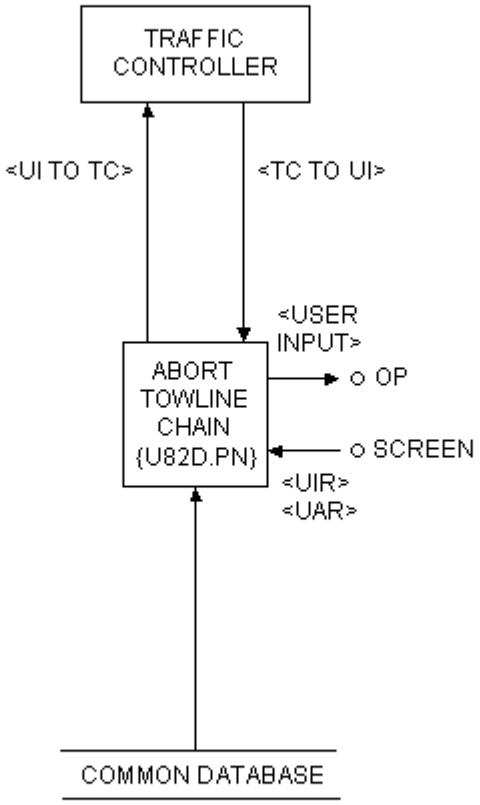

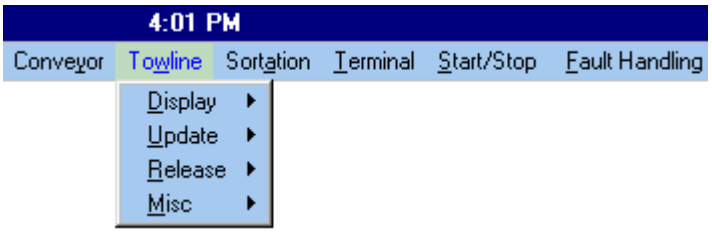

Figure 3.2.4.8.2-1 Towline Menu

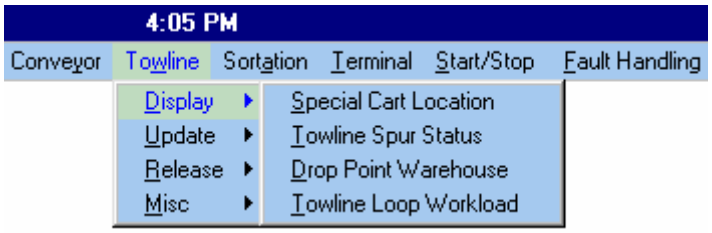

Figure 3.2.4.8.2-2 Towline Display Menu

Overview

The Towline Menu Dialog Boxes are used to manage the movement of the towline carts. Display Dialog Boxes are used to monitor the activity of the towline. They display special cart locations, spur statuses, drop point warehouses and loop workloads. Data entry Dialog Boxes are used to update the towline parameters used in distributing and routing carts. They allow user to release carts from queues, change cart types, unlock workstations, change spur priorities, change the status of spurs, change inspection types associated with spurs, change drop point warehouses, and manage cart distribution.

3.2.4.8.2.1 U821.PN - Display Special Cart Location

Process Name	Process ID #	Date
Display Special Cart Location	U821.PN	November 6, 1997

Requirement ID #(s)
SECS-RC2.10

Process Narrative

This process is used to display the last known locations and destinations of special towline carts. The user will first choose the type of cart to display, or they can choose to display information about all special towline carts. Then the process will select the information from the database and will show the cart ID, the type of cart, the last known location and the destination of the cart. If the status of the cart is offline, this information is displayed in the destination field.

Figure 3.2.4.8.2.1-1 Display Special Cart Locations (Screen 1)

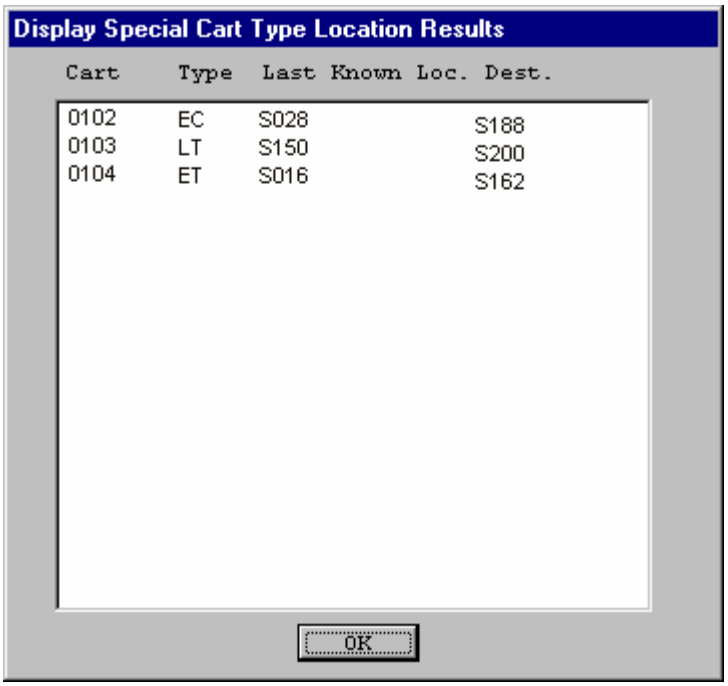

Figure 3.2.4.8.2.1-2 Display Special Cart Locations (Screen 2)

Description

Display Special Cart Locations is used to display current locations and destinations of special towline carts in the EDC. If the cart status is offline, that information is displayed in the destination field.

Special carts consist of caged carts, trash carts, totebox stack carts, packing supplies carts, and carts loaded with a stack of empty pallets. Each special cart is identified by two-character cart type as shown at the bottom of the conversation screen.

3.2.4.8.2.2 **U822.PN - Display Towline Spur Status**

Process Name	Process ID #	Date
Display Towline Spur Status	U822.PN	November 6, 1997

Requirement ID #(s)
SECS-RC2.2, SECS-RC2.10, SECS-RC2.11

Process Narrative

This process will display the status of the towline at a particular spur. The user will first select an area, either Receiving, Storage, Sortation/Consolidation and Packing, or Shipping. This process will query the database for needed information. Then it will list information about the spur, including the physical and logical status, whether the spur is locked or unlocked, the condition status of the spur (whether it is empty or occupied), the Workstation Function, and the Spur ID.

U822.PN - Display Towline Spur Status

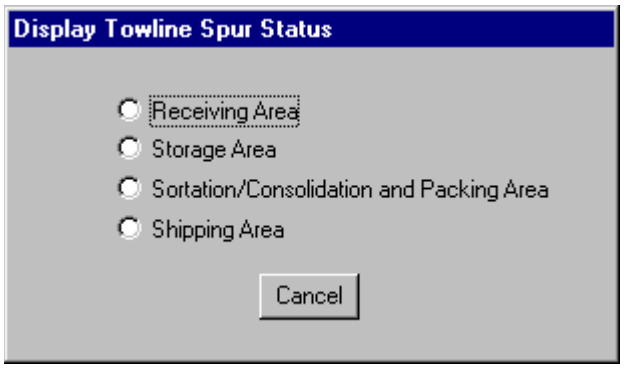

Figure 3.2.4.8.2.2-1 Display Towline Spur Status (Screen 1)

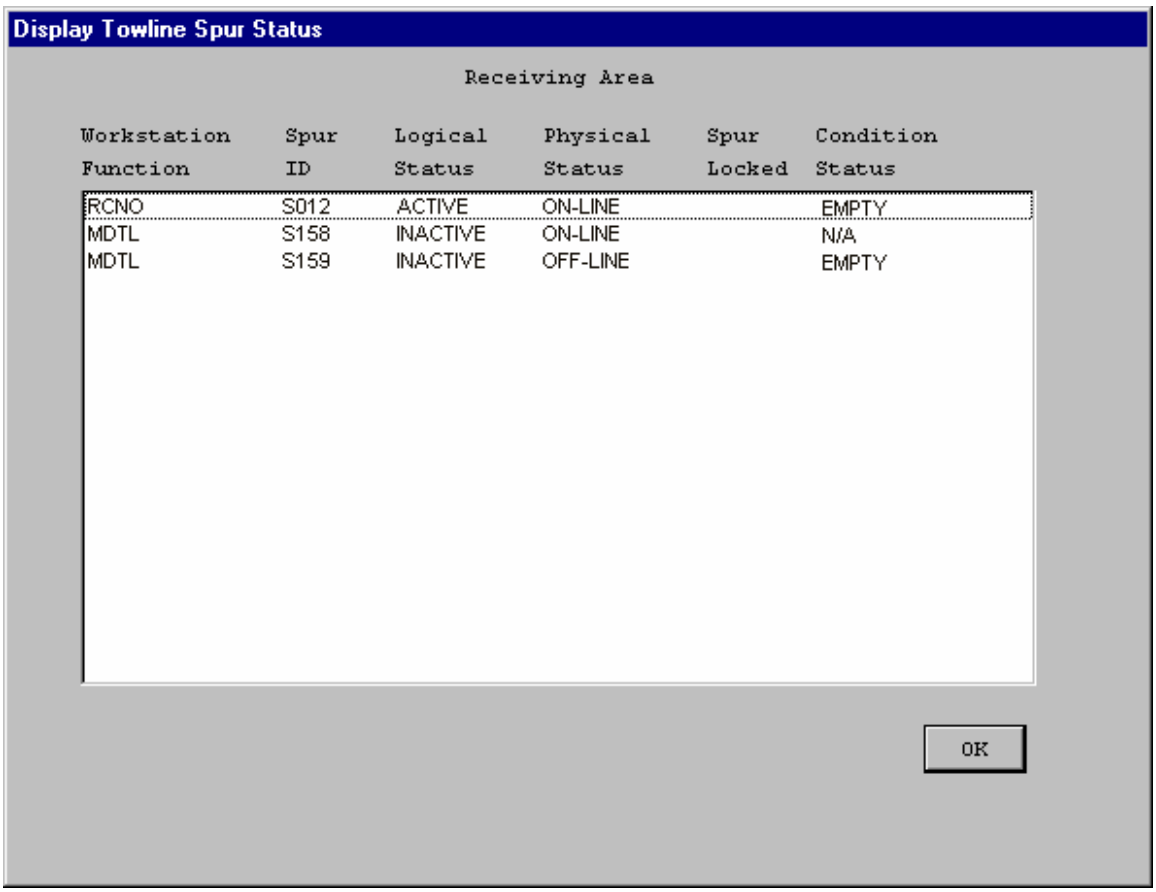

Figure 3.2.4.8.2.2-2 Display Towline Spur Status (Screen 2)

Description

Display Towline Spur Status is used to display three different statuses for each towline spur in an area: Logical Status, Physical Status, Spur Locked, and Conditional Status.

3.2.4.8.2.3 **U823.PN - Display Drop Point Warehouse**

Process Name	Process ID #	Date
Display Drop Point Warehouse	U823.PN	November 6, 1997

Requirement ID #(s)
SECS-RC2.10, SECS-RC2.11

Process Narrative

This process is used to display the drop point warehouse assigned to each towline spur in the Intradepot Receiving Queue, and the warehouses serviced by each drop point warehouse. This process will select the needed information from the database and will display the results to the user.

U823.PN - Display Drop Point Warehouse

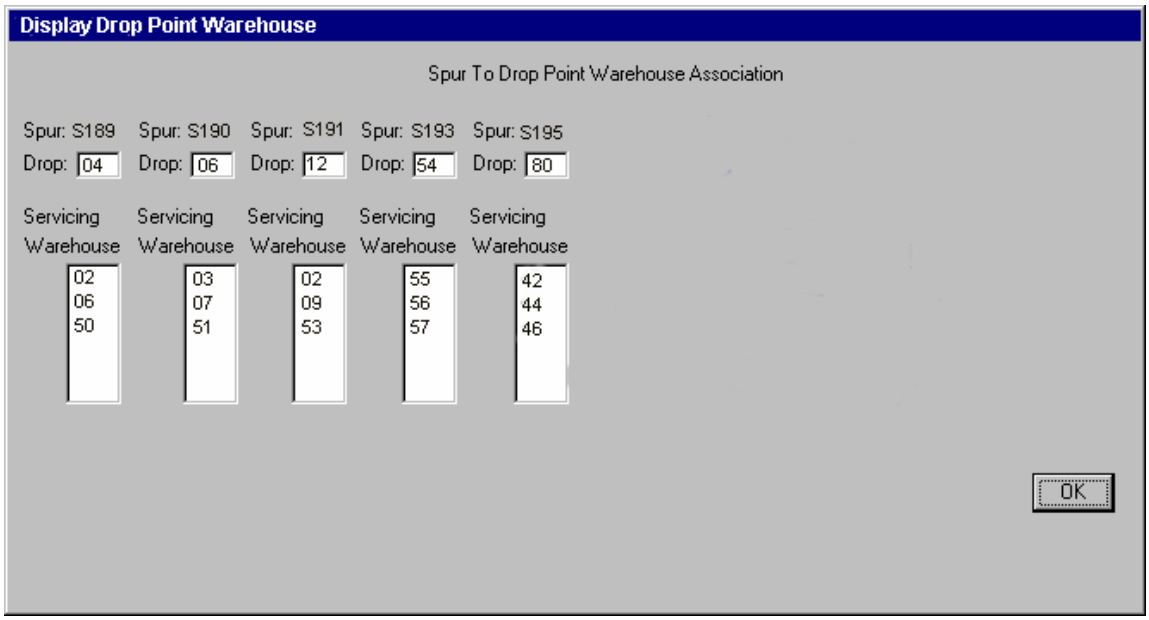

Figure 3.2.4.8.2.3-1 Display Drop Point Warehouse

Description

Display Drop Point Warehouse is used to display the drop point warehouse assigned to each towline spur in the Intradepot Receiving Queue, and the warehouse serviced by each drop point warehouse.

A drop point warehouse is an outlying warehouse that receives truckloads of material from the EDC to be delivered to several warehouses. The warehouses serviced by a drop point warehouse are shown on the screen directly below the drop point warehouse.

3.2.4.8.2.4 U824.PN - Display Towline Loop Workload

Process Name	Process ID #	Date
Display Towline Loop Workload	U824.PN	November 6, 1997

Requirement ID #(s)
SECS-RC2.10, SECS-RC2.11

Process Narrative

This process will display workloads for the towline loops. The user will select which towline loop to view, or they may choose to view several or all towline loops. Then this process will query the database for the information. It will then display the loop number, capacity, number of carts currently on the loop, and the percentage used.

U824.PN - Display Towline Loop Workload

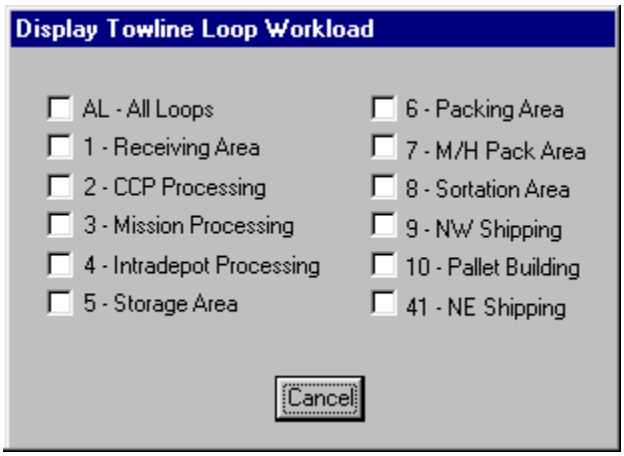

Figure 3.2.4.8.2.4-1 Display Towline Loop Workload (Screen 1)

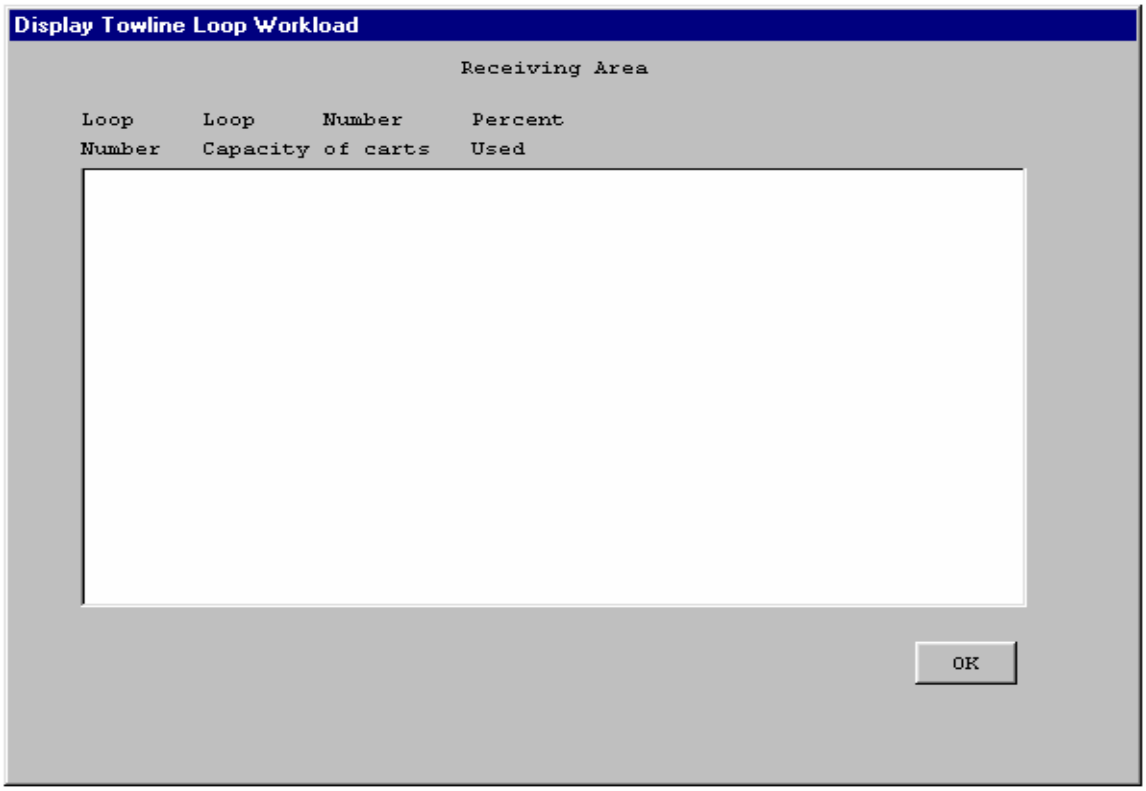

Figure 3.2.4.8.2.4-2 Display Towline Loop Workload (Screen 2)

Description

Display Towline Loop Workload displays the number of carts currently on one or more towline loops, the capacity of the towline loop(s), and the percentage of utilization of the towline loop(s).

3.2.4.8.2.5 **U825.PN - Release Cart From Intradepot Queue**

Process Name	Process ID #	Date
Release Cart From Intradepot Queue	U825.PN	November 6, 1997

Requirement ID #(s)
SECS-RC2.3, SECS-RC2.10, SECS-RC2.11

Process Narrative

This process is used to notify the ECS that a cart, or set of carts, in the Intradepot Receiving Queue is ready to be moved to the outbound pallet conveyors. This process will first select and display information pertaining to the Intradepot Receiving Queues. The user will enter in the Spur ID or Control Number and then enter the output lane. This process will then format and send a message (J77) to the Towline Subcontroller (L.DFD) via the Traffic Subcontroller (T.DFD) to have the carts moved from the queue.

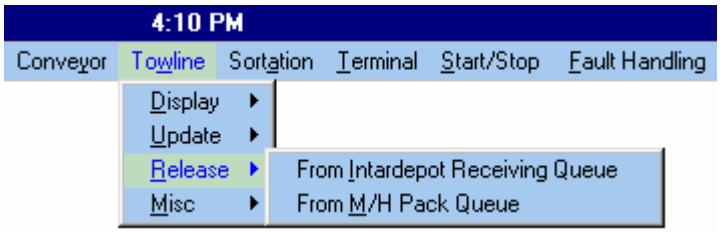

Figure 3.2.4.8.2.5-1 Towline Release Cart Menu

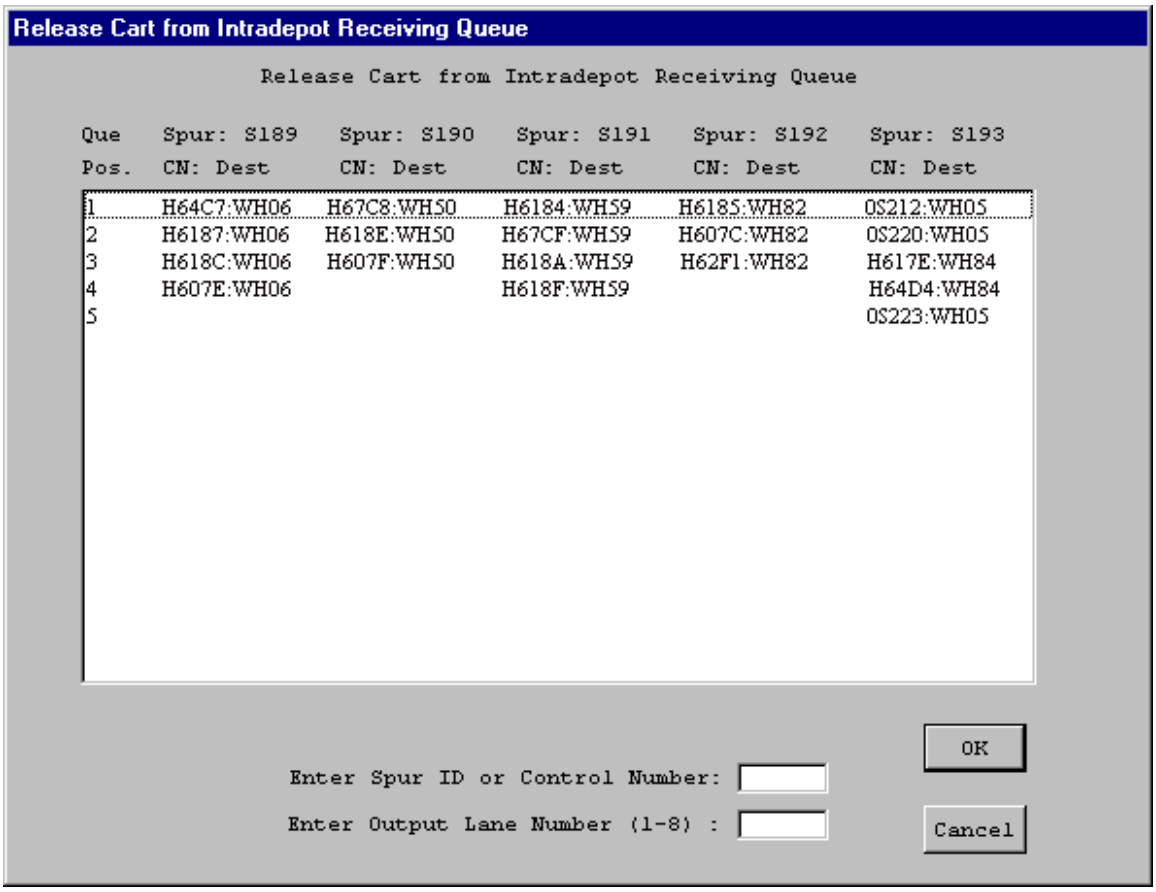

Figure 3.2.4.8.2.5-2 Release Cart from Intradepot Receiving Queue

Description

Release Cart From Intradepot Receiving Queue is used to notify the ECS that a cart or a set of carts, on a towline spur in the Intradepot Receiving Queue is ready to be moved to the outbound pallet conveyors at Intradepot Receiving.

3.2.4.8.2.6 **U826.PN - Release Cart From M/H Queue**

Process Name	Process ID #	Date
Release Cart From M/H Queue	U826.PN	November 6, 1997

Requirement ID #(s)
SECS-RC2.3, SECS-RC2.10, SECS-RC2.11

Process Narrative

This process allows the user to release a towline cart on a M/H Pack Queue spur. This cart must be first on a spur and not part of a chain of carts. Normally, the releasing of carts from this queue is automatically scheduled, but this process will allow the user to override this release schedule. The user will be prompted for the Cart ID of the cart to be released. The Cart ID will be verified through the database, and then a message (J79) will be formatted and sent to the Towline Subcontroller (L.DFD) via the Traffic Subcontroller (T.DFD) to move the cart.

U826.PN - Release Cart From Medium/Heavy Pack Queue

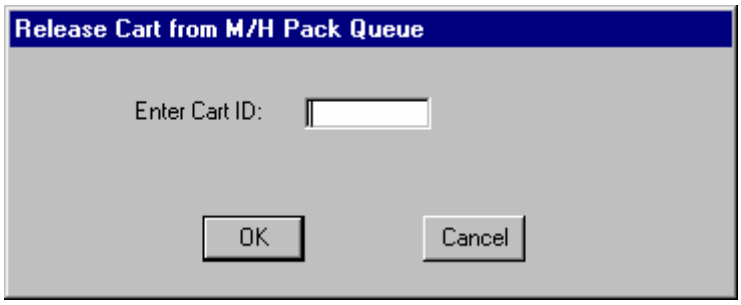

Figure 3.2.4.8.2.6-1 Release Cart from Medium/Heavy Pack Queue

Description

Release Cart From Medium/Heavy Pack Queue is used to notify the ECS that a towline on a Medium/Heavy Pack Queue spur should be the next cart released to Medium/Heavy Pack. The cart must be first on the spur and not part of a chain of carts.

3.2.4.8.2.7 **U827.PN - Update Cart Type**

Process Name	Process ID #	Date
Update Cart Type	U827.PN	November 6, 1997

Requirement ID #(s)
SECS-RC2.8, SECS-RC2.10, SECS-RC2.11

Process Narrative

This process is used to update the cart type for a cart in the EDC. This process will prompt the user for a Cart ID. The current type of the cart is selected from the database and displayed to the user. This process will also display all other possible types of towline carts. The user can they select a new cart type to associate with the Cart ID. The process will then format and send a message (J81) to the Towline Subcontroller (L.DFD) via the Traffic Subcontroller (T.DFD) to have the type updated in the database.

U827.PN - Update Cart Type

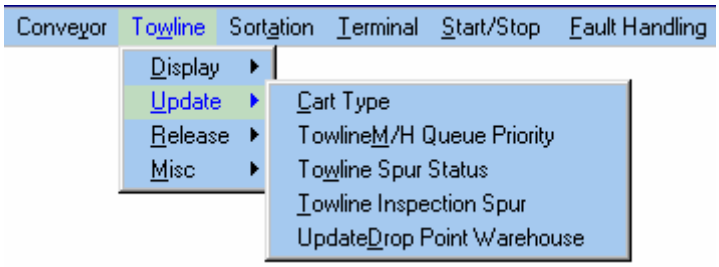

Figure 3.2.4.8.2.7-1 Towline Update Cart Type Menu

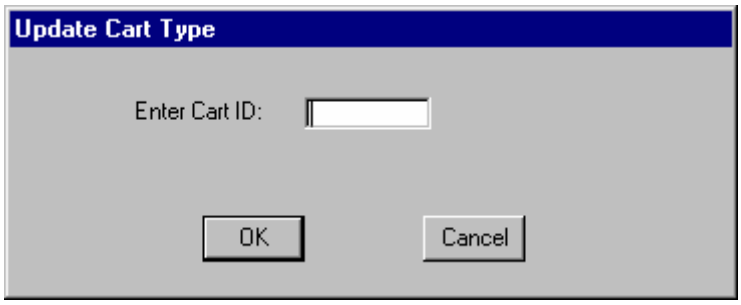

Figure 3.2.4.8.2.7-2 Update Cart Type (Screen 1)

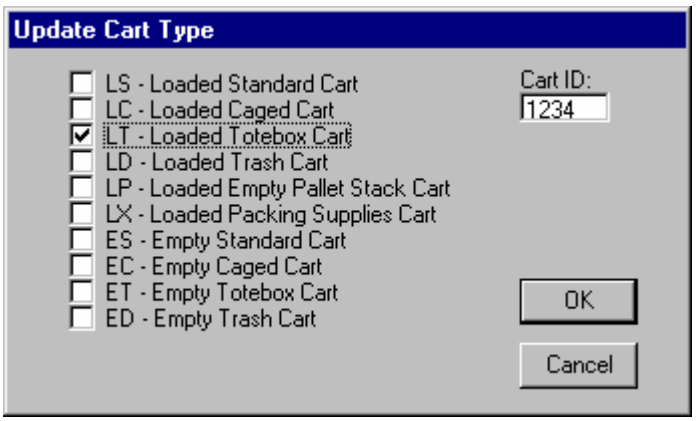

Figure 3.2.4.8.2.7-3 Update Cart Type (Screen 2)

Description

Update Cart Type is used to change the cart type assigned to a cart.

3.2.4.8.2.8 **U828.PN - Unlock Towline Workstation**

Process Name	Process ID #	Date
Unlock Towline Workstation	U828.PN	November 6, 1997

Requirement ID #(s)
SECS-RC2.10, SECS-RC2.11

Process Narrative

This process is used to unlock a towline spur that has been locked by a cart that is part of a chain. When the spur is unlocked using this process, the chain is dissolved. This process will prompt the user for the Spur ID and will validate this information against data in the database. Then this process will format and send a message (J83) to the Towline Subcontroller (L.DFD) via the Traffic Subcontroller (T.DFD) to have the spur unlocked and the chain dissolved.

U828.PN Unlock Towline Workstation

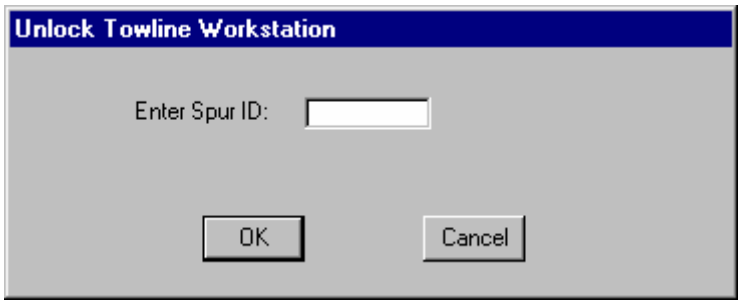

Figure 3.2.4.8.2.8-1 Unlock Towline Workstation

Description

Unlock Towline Workstation is used to unlock a towline spur that has been locked by a cart that is part of a chain. When a spur is unlocked using this conversation, the chain is dissolved.

3.2.4.8.2.9 **U829.PN - Update M/H Pack Queue**

Process Name	Process ID #	Date
Update M/H Pack Queue Priority	U829.PN	November 6, 1997

Requirement ID #(s)
SECS-RC2.8, SECS-RC2.10, SECS-RC2.11

Process Narrative

This process is used to display and/or change the priority assigned to one or more towline spurs in the M/H Pack Queue. The information regarding M/H Pack Queue is selected from the database and displayed to the user. The user will then be able to select a Spur ID and change the priority associated with it by checking the box with the new priority. If any priorities are changed, a message (J85) will be formatted and sent to the Towline Subcontroller (L.DFD) via the Traffic Subcontroller to update the database.

U829.PN - Update Towline Medium/Heavy Queue Priority

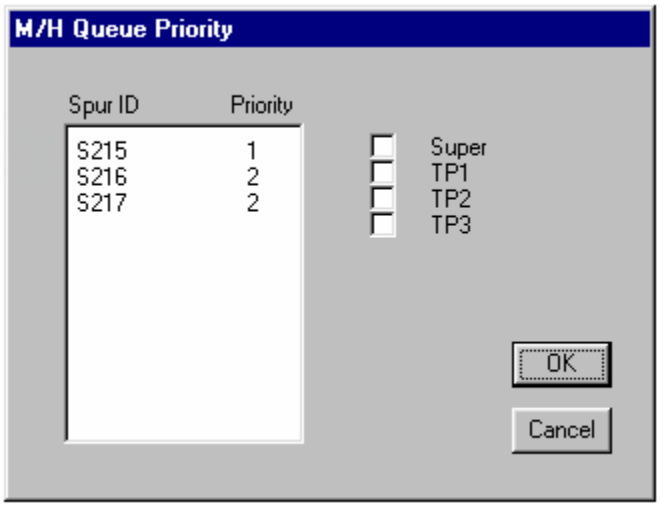

Figure 3.2.4.8.2.9-1 Update Towline Medium/Heavy Queue Priority

Description

Update Towline Medium/Heavy Queue Priority is used to display and/or change the priority assigned to one or more towline spurs in the Medium/Heavy Pack Queue.

The Medium/Heavy Pack Queue consists of 12 spurs that hold carts until they are released to the Medium/Heavy Pack workstation.

3.2.4.8.2.10 **U82A.PN - Update Towline Spur Status**

Process Name	Process ID #	Date
Update Towline Spur Status	U82A.PN	November 6, 1997

Requirement ID #(s)
SECS-RC2.2, SECS-RC2.8, SECS-RC2.10, SECS-RC2.11

Process Narrative

This process is used to change the logical status for one or more towline spur stations. Changes can be made to spurs in either the Receiving area, the Storage area, the Sortation/ Consolidation and Packing area, or the Shipping area. Once the user selects the area, this process will query the database for the towline spur statuses. Then the process will list the information about the spur, including the logical and physical status and the condition status. The user can then change the status for a particular spur by selecting the Spur ID and clicking on the toggle status button. Once a spur status in changed, a message (J73) will be formatted and sent to the Towline Subcontroller (L.DFD) via the Traffic Subcontroller (T.DFD) to have the change made in the database.

U82A.PN - Update Towline Spur Status

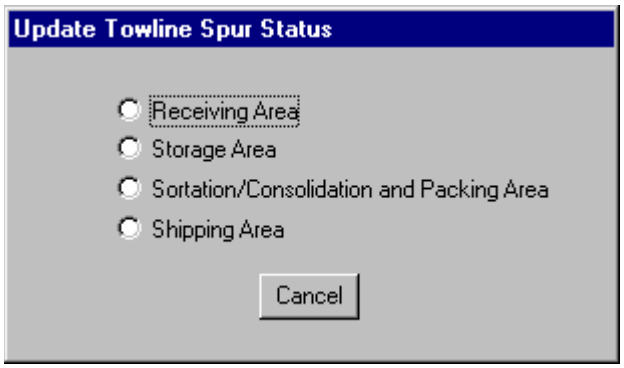

Figure 3.2.4.8.2.10-1 Update Towline Spur Status (Screen 1)

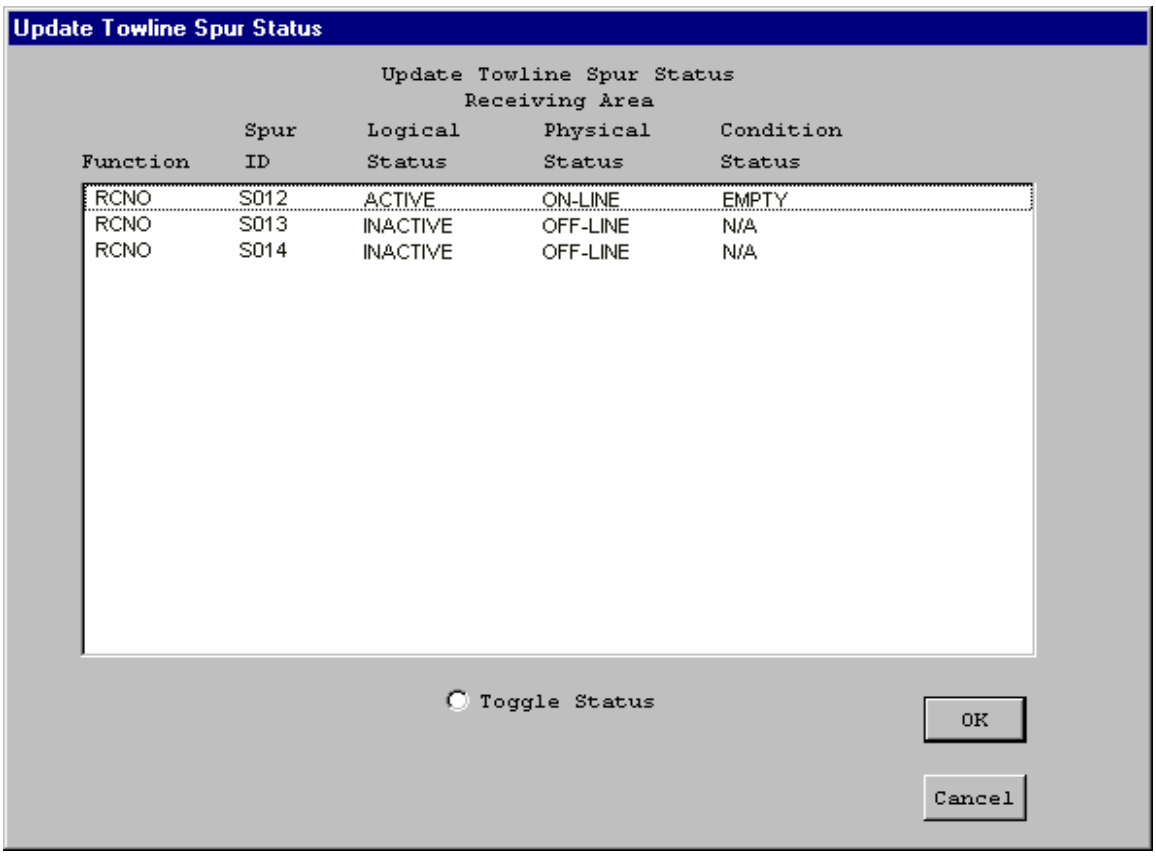

Figure 3.2.4.8.2.10-2 Update Towline Spur Status (Screen 2)

Description

Update Towline Spur Status is used to change the logical status in the ECS of one or more towline spurs. User specifies the area (Receiving, Storage, Sortation / Consolidation and Packing, or Shipping) of the spurs to be changed.

3.2.4.8.2.11 **U82B.PN - Update Towline Inspection Spur Type**

Process Name	Process ID #	Date
Update Towline Inspection Spur Type	U82B.PN	November 6, 1997

Requirement ID #(s)
SECS-RC2.8, SECS-RC2.10, SECS-RC2.11

Process Narrative

This process is used to change the type of inspection that is being performed at a particular towline spur(s) in the receiving area. It will allow the user to choose the spur(s) and to choose the type of inspection to be performed at the spur(s). This process will then format and send a message (J75) to the Towline Subcontroller (L.DFD) via the Traffic Subcontroller (T.DFD).

U82B.PN - Update Towline Inspection Spur Type

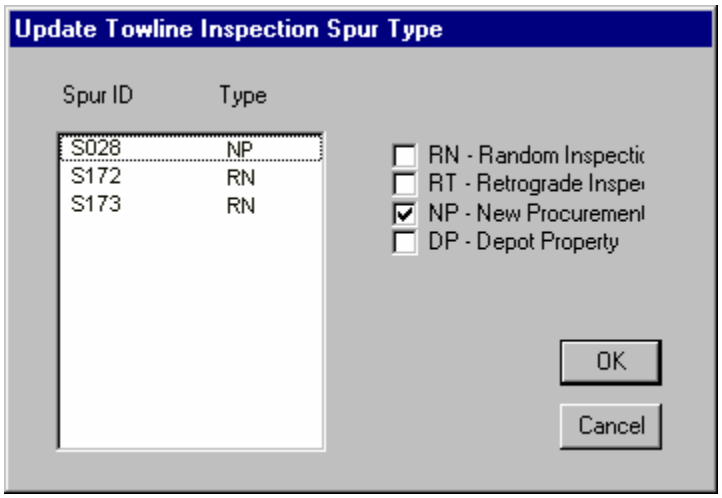

Figure 3.2.4.8.2.11-1 Update Towline Inspection Spur Type

Description

Update Towline Inspection Spur Type is used to notify the ECS that a different type of inspection will be performed at one or more towline spurs in the receiving inspection area.

3.2.4.8.2.12 **U82C.PN - Update Drop Point Warehouse**

Process Name	Process ID #	Date
Update Drop Point Warehouse	U82C.PN	November 6, 1997

Requirement ID #(s)
SECS-RC2.8, SECS-RC2.10, SECS-RC2.11

Process Narrative

This process is used to change the drop point warehouse assigned to a towline spur in the Intradepot Receiving Queue, and/or the outlying warehouses serviced by each drop point warehouse. This process will read the 'Warehouses' and 'Workstations' database tables and display the current outlying warehouse to Intradepot Receiving Queue configuration. The user can then make changes to the outlying warehouse to Intradepot Receiving Queue configuration. This will cause a message (J87) to be sent to the Towline Subcontroller (L.DFD) via the Traffic Subcontroller (T.DFD) to update the database.

U82C.PN - Update Drop Point Warehouse

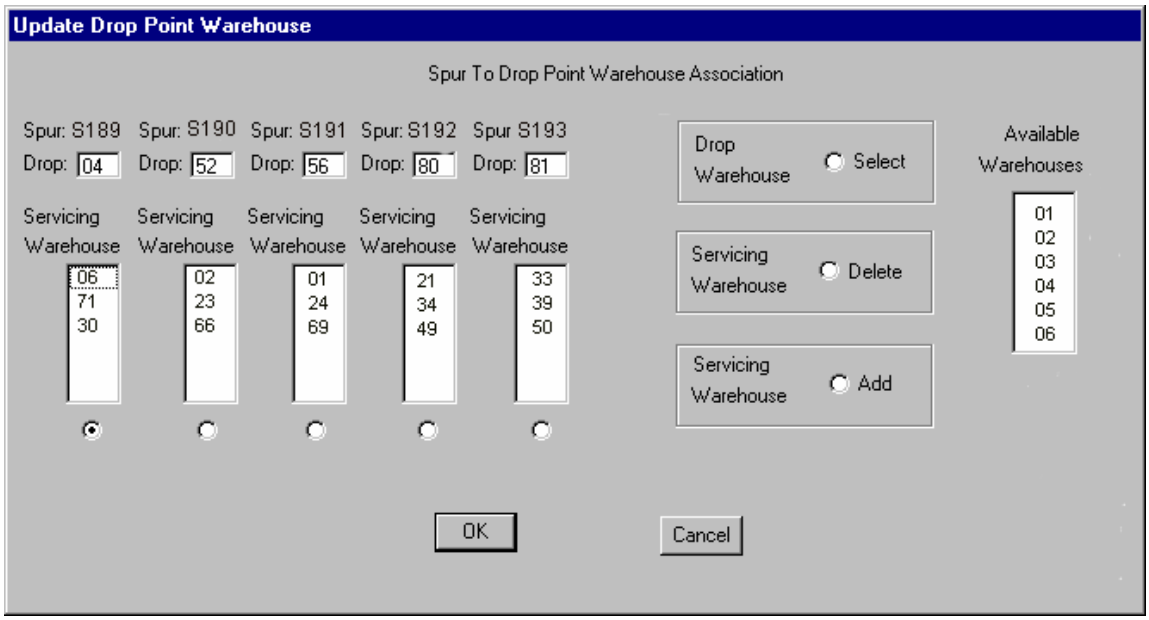

Figure 3.2.4.8.2.12-1 Update Drop Point Warehouse

Description

Update Drop Point Warehouse is used to change the drop point warehouse assigned to a towline spur in the Intradepot Receiving Queue, and/or the warehouses serviced by each drop point warehouse.

3.2.4.8.2.13 **U82D.PN - Abort Towline Chain**

Process Name	Process ID #	Date
Abort Towline Chain	U82D.PN	November 6, 1997

Requirement ID #(s)
SECS-RC2.10, SECS-RC2.11

Process Narrative

This process is used to abort a chain which has caused a towline spur to be locked. The user is prompted for the Chain ID, which is then validated by this process. A message (J91) is then formatted and sent to the Towline Subcontroller (L.DFD) to have the chain dissolved and to have the workstation unlocked.

U82D.PN - Abort Towline Chain

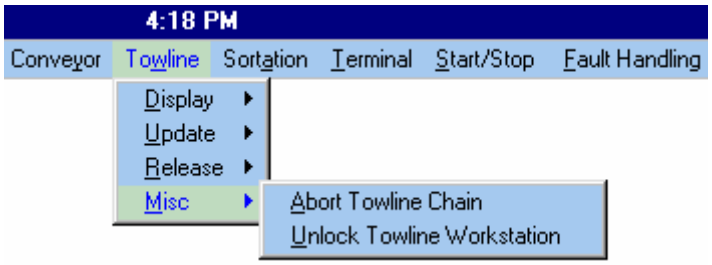

Figure 3.2.4.8.2.13-1 Towline Miscellaneous Menu

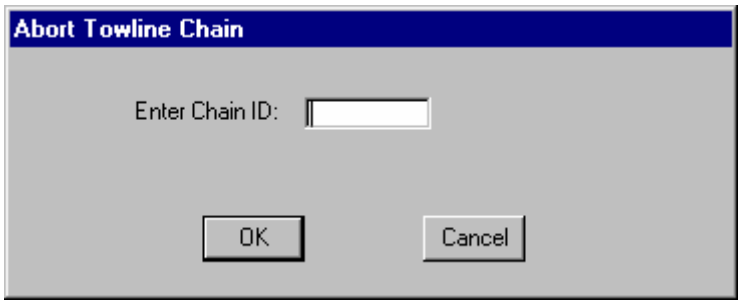

Figure 3.2.4.8.2.13-2 Abort Towline Chain Conversation

Description

Abort Towline Chain is used to abort a towline chain that has been locked by a cart that is part of a chain. When a chain is aborted using this conversation, the chain is dissolved.

3.2.4.8.3 **U83.DFD**

Process ID #	Date
U83.DFD - Sorter - New Cumberland Only Page 1 of 2	November 6, 1997

Requirement ID #(s)

SECS-RC2.1, SECS-RC2.2, SECS-RC2.3, SECS-RC2.4, SECS-RC2.5, SECS-RC2.6, SECS-RC2.7, SECS-RC2.8, SECS-RC2.9, SECS-RC2.10, SECS-RC2.11

Data Flow Diagram

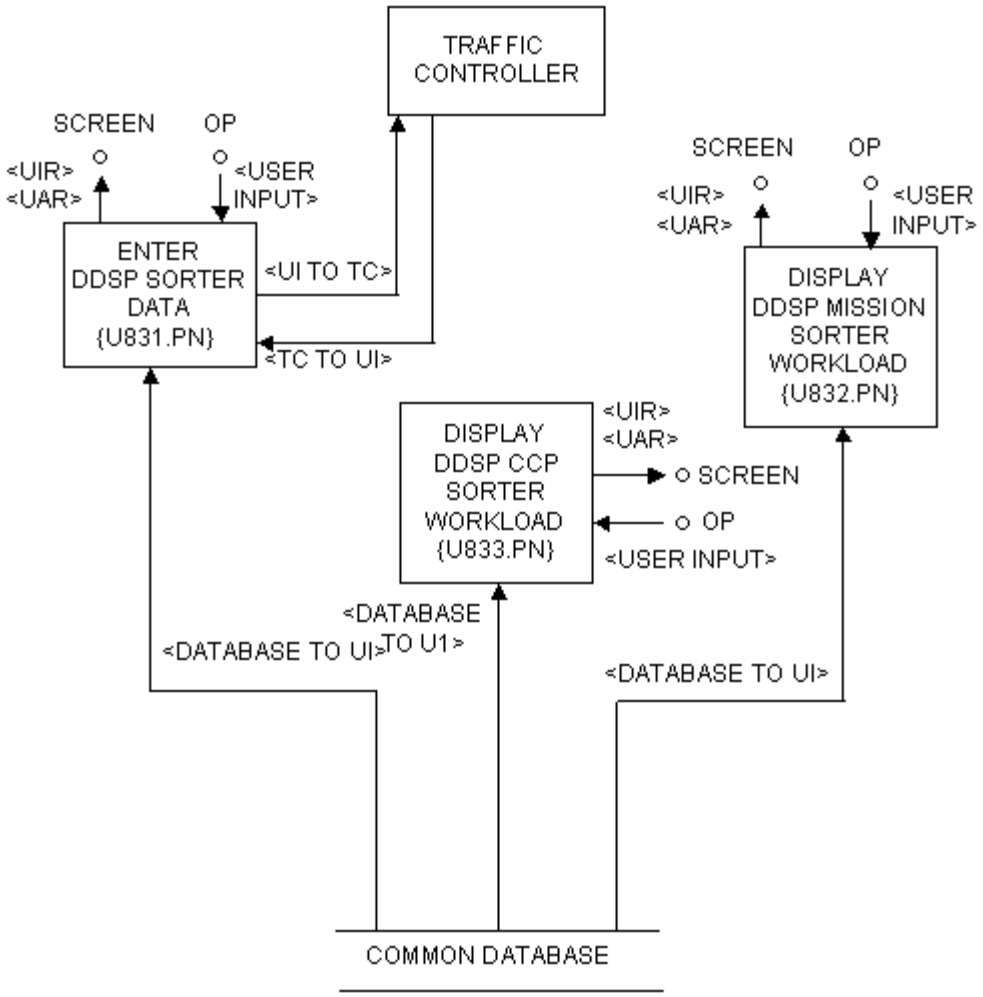

Process ID #	Date
U83.DFD - Sorter - New Cumberland Only Page 2 of 2	November 6, 1997

Requirement ID #(s)

SECS-RC2.1, SECS-RC2.2, SECS-RC2.3, SECS-RC2.4, SECS-RC2.5, SECS-RC2.6, SECS-RC2.7, SECS-RC2.8, SECS-RC2.9, SECS-RC2.10, SECS-RC2.11

Data Flow Diagram

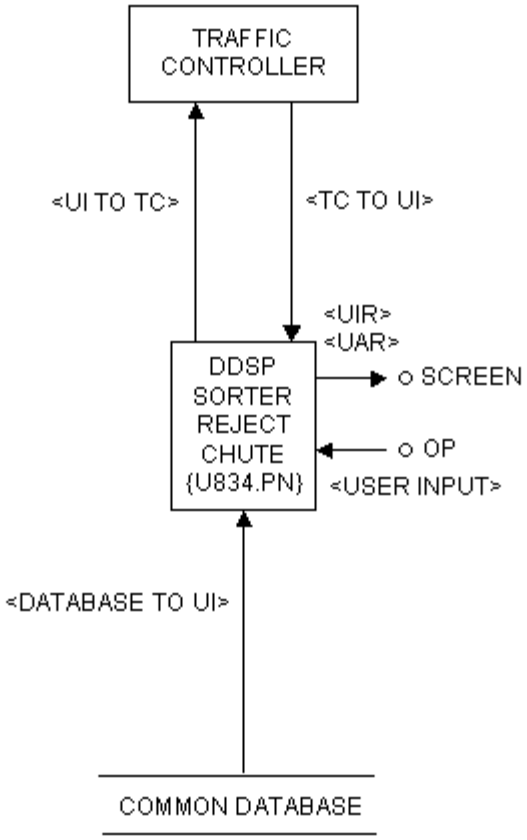

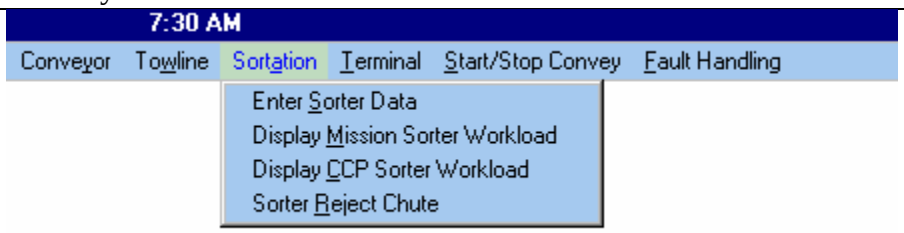

Figure 3.2.4.8.3-1 Sortation Menu – New Cumberland Only

Overview

Sortation Dialog Boxes direct the delivery of conveyable material to sorter chutes, each of which is dedicated to a specific destination within or outside of the EDC. There are two sorters, one that handles Mission, ISA and dedicated truck material, and one that handles CCP material.

New Cumberland Only: The two display menu selections display the workloads of the Mission and CCP Sorters. They show the number of barcoded items delivered to each chute since ECS start-up, and a cumulative total for all chutes on the sorter.

The data entry conversations allow the user to assign a chute destination to an item that does not already have one assigned, and determine what action should be taken for a package that arrives at the CCP or Mission Sorter Reject Chute.

3.2.4.8.3.1 U831.PN - Enter Sorter Data

Process Name	Process ID #	Date
Enter Sorter Data – New Cumberland Only	U831.PN	November 6, 1997

Requirement ID #(s)
SECS-RC2.8, SECS-RC2.10, SECS-RC2.11

Process Narrative

This process is used to assign a chute destination to a barcoded item for which an assignment has not already been made (for instance, an item that arrives from an outlying warehouse). This process will prompt the user for the control number of the item to be inducted into the sorter, and the ID of the Pack Lane (sorter chute) to which the item is to be delivered. If the item is mission material, the user must also indicate whether the item is to be delivered to the heavy or light side of the chute, or neither. This process will then format and send a message (M01) to the Sorter Subcontroller (B.DFD) via the Traffic Subcontroller (T.DFD) to have the appropriate database records updated.

U831.PN - Enter Sort Data

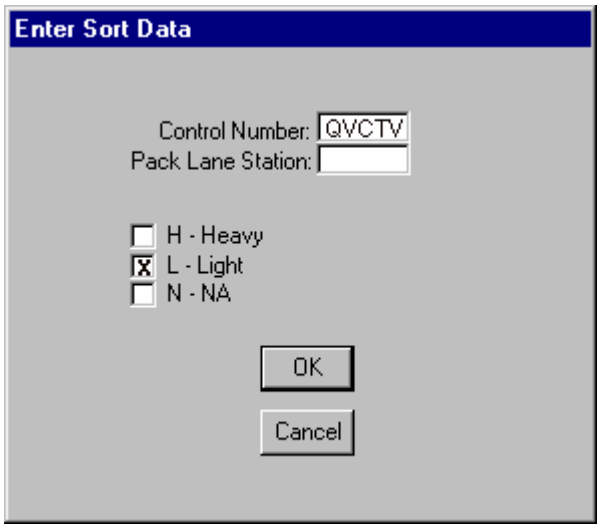

Figure 3.2.4.8.3.1-1 Enter Sort Data – New Cumberland Only

Description

Enter Sort Data is used to assign a chute destination to a barcoded item (pick or package) for which DSS has not already made the assignment (for instance, an item that arrives from an outlying warehouse).

3.2.4.8.3.2 U832.PN - Display Mission Sorter Workload - New Cumberland Only

Process Name	Process ID #	Date
Display Mission Sorter Workload – New Cumberland Only	U832.PN	November 6, 1997

Requirement ID #(s)
SECS-RC2.2, SECS-RC2.11

Process Narrative

This process is used to obtain the number of barcoded items delivered to the Mission Sorter since startup. This process will select information from the database and will then display the counts (Packages Delivered) for individual Mission Sorter chutes and will also display a cumulative total (Total Mission Sorter Packages) for all Mission chutes.

U832.PN - Display Mission Sorter Workload - New Cumberland Only

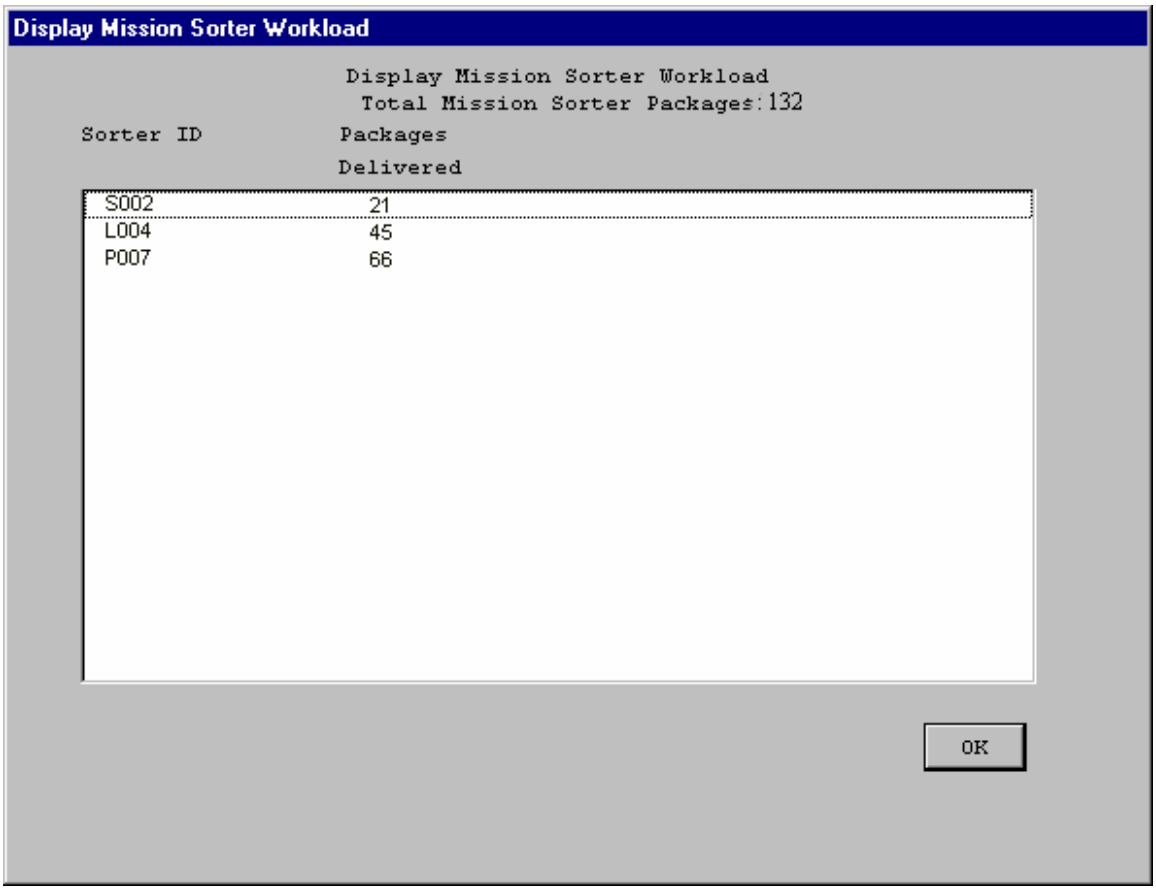

Figure 3.2.4.8.3.2-1 Display Mission Sorter Workload – New Cumberland Only

Description

Display Mission Sorter Workload is used to obtain the number of barcoded items (picks and packages) delivered by the Mission Sorter since ECS start-up. Counts for individual Mission Sorter chutes and cumulative total for all Mission Sorter chutes are displayed.

3.2.4.8.3.3 U833.PN - Display CCP Sorter Workload - New Cumberland Only

Process Name	Process ID #	Date
Display CCP Sorter Workload – New Cumberland Only	U833.PN	November 6, 1997

Requirement ID #(s)
SECS-RC2.2, SECS-RC2.11

Process Narrative

This process is used to obtain the number of barcoded items delivered to the CCP Sorter since startup. This process will select information from the database and will then display the counts (Packages Delivered) for individual CCP Sorter chutes and will also display a cumulative total (Total CCP Sorter Packages) for all CCP chutes.

U833.PN - Display CCP Sorter Workload - New Cumberland Only

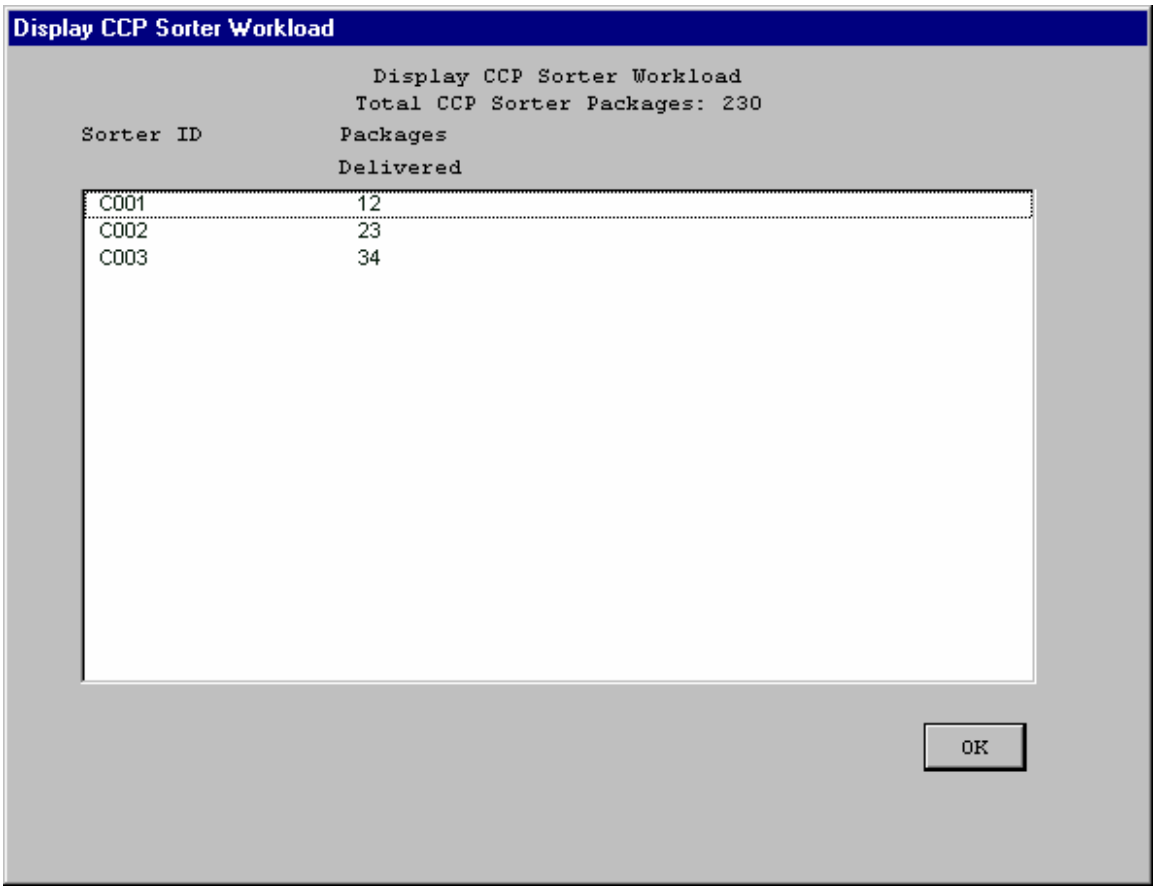

Figure 3.2.4.8.3.3-1 Display CCP Sorter Workload – New Cumberland Only

Description

Display CCP Sorter Workload is used to obtain the number of barcoded items (picks and packages) delivered by the CCP Sorter since ECS start-up. Counts for individual CCP Sorter chutes and cumulative total for all CCP Sorter chutes are displayed.

3.2.4.8.3.4 **U834.PN - Sorter Reject Chute**

Process Name	Process ID #	Date
Sorter Reject Chute – New Cumberland Only	U834.PN	November 6, 1997

Requirement ID #(s)
SECS-RC2.2, SECS-RC2.11

Process Narrative

This process is used to display the sortation status of an item. This can be used solely as an inquiry process, or for taking action to correct an error condition. This process will display information from the database which informs the user as to whether or not a package arrived at the correct sorter chute and, if not, the reason it did not arrive. If the user decides to take a recommended action, a message (M01) will be formatted and sent to the Sorter Controller (B.DFD) via the Traffic Subcontroller (T.DFD).

3.2.4.8.3.5 **U834.PN - Sorter Reject Chute**

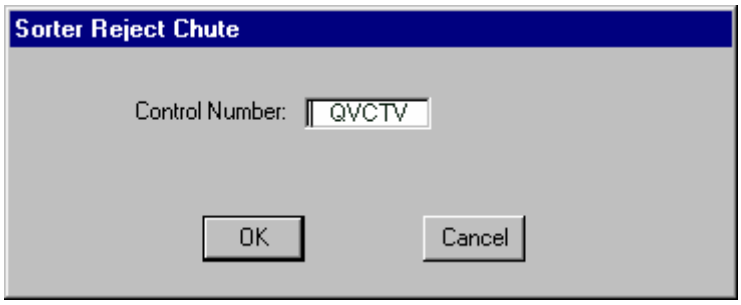

Figure 3.2.4.8.3.5-1 Sorter Reject Chute (Screen 1) – New Cumberland

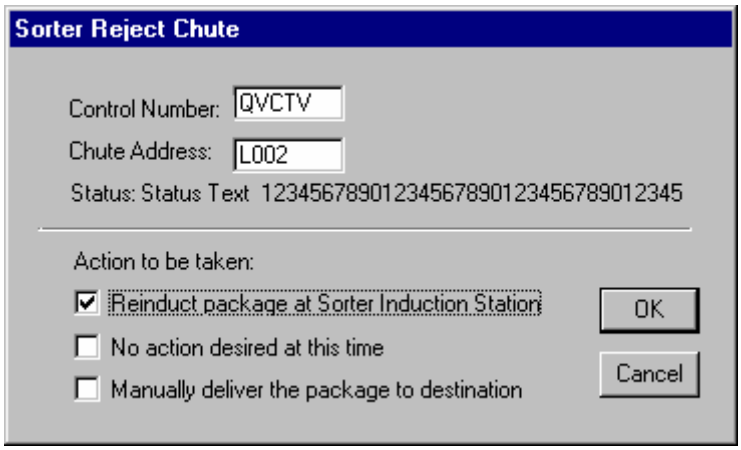

Figure 3.2.4.8.3.5-2 Sorter Reject Chute (Screen 2) – New Cumberland Only

3.2.4.8.4 **U84.DFD**

Process ID #	Date
U84.DFD - Terminal Page 1 of 2	November 6, 1997

Requirement ID #(s)

SECS-RC2.1, SECS-RC2.2, SECS-RC2.3, SECS-RC2.4, SECS-RC2.5, SECS-RC2.6, SECS-RC2.7, SECS-RC2.8, SECS-RC2.9, SECS-RC2.10, SECS-RC2.11

Data Flow Diagram

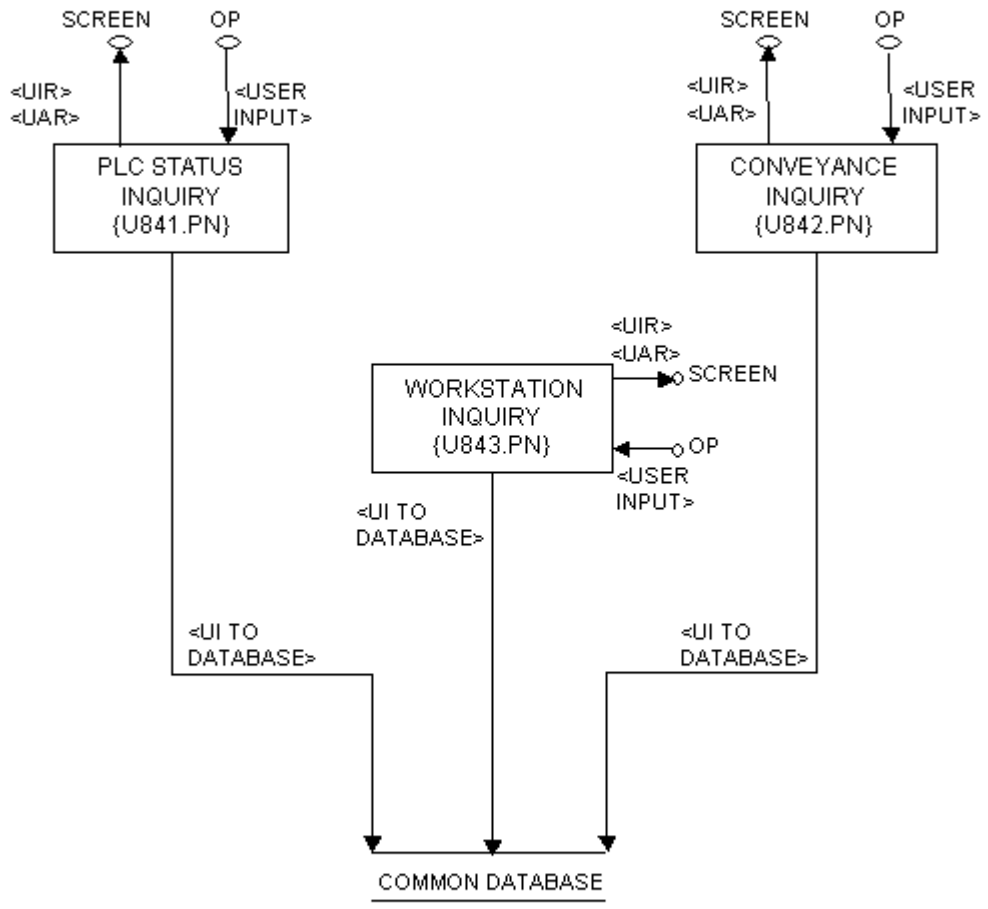

Process ID #	Date
U84.DFD - Terminal Page 2 of 2	November 6, 1997

Requirement ID #(s)

SECS-RC2.1, SECS-RC2.2, SECS-RC2.3, SECS-RC2.4, SECS-RC2.5, SECS-RC2.6, SECS-RC2.7, SECS-RC2.8, SECS-RC2.9, SECS-RC2.10, SECS-RC2.11

Data Flow Diagram

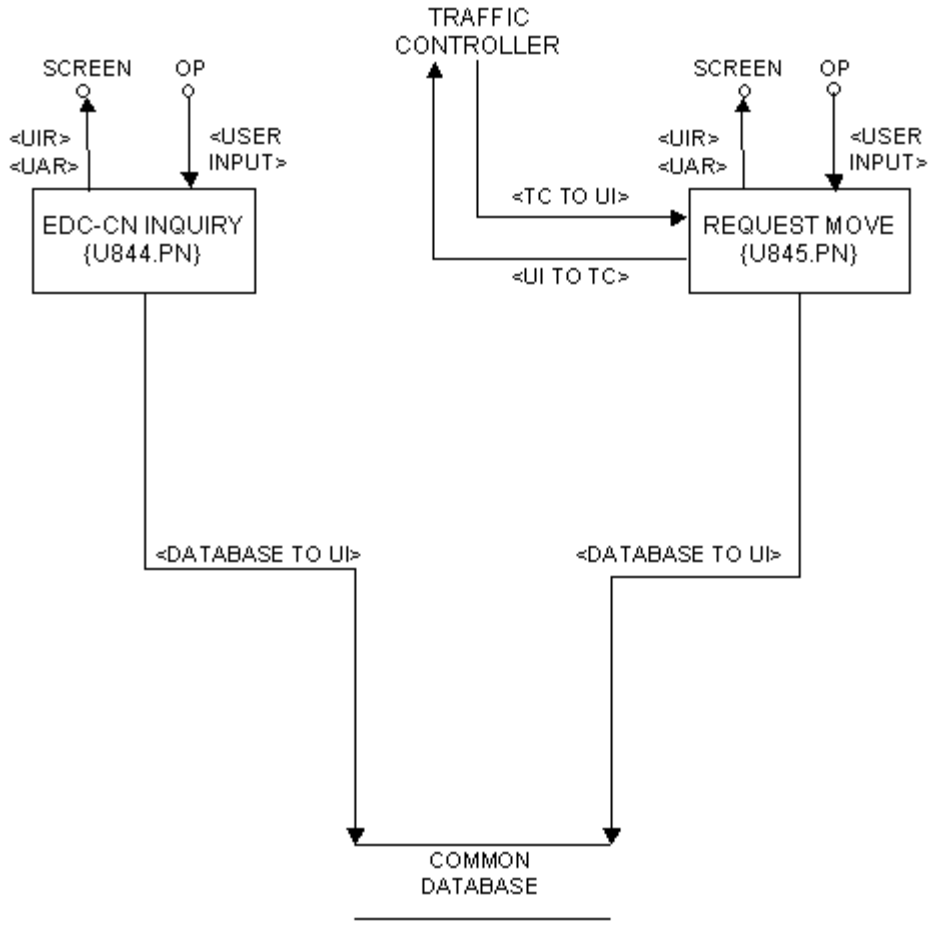

U84 - Terminal Menu

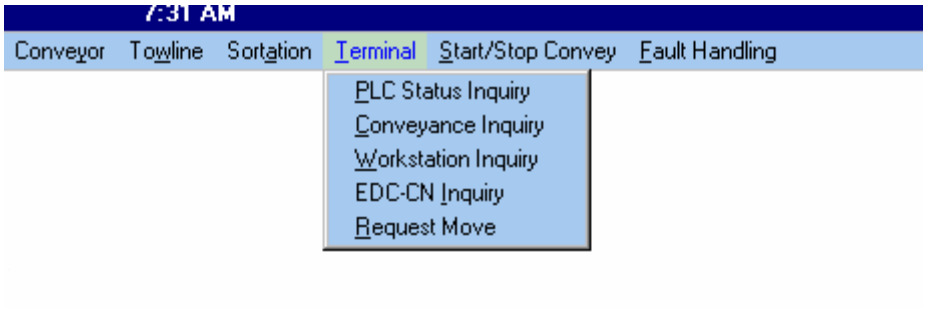

Figure 3.2.4.8.4-1 Terminal Menu

Overview

The Terminal Menu includes inquiry Dialog Boxes and various data entry Dialog Boxes that are not used during the normal work flow. Though the selections listed on this menu, the user can (1) request information about the state of any of the several communication links that affect ECS operations, about a conveyance (tote or cart), about a workstation, spur or work area, about a pack chain, or about an EDC-CN; (2) request material movement, modify material movement, or report the manual movement of material; and (3) request the reprinting of a Ready List or CCP Label.

3.2.4.8.4.1 **U841.PN - PLC Status Inquiry**

Process Name	Process ID #	Date
PLC Status Inquiry	U841.PN	November 6, 1997

Requirement ID #(s)
SECS-RC2.2, SECS-RC2.10, SECS-RC2.11

Process Narrative

This process is used to display information about the status of the Towline PLCs, the Tote PLCs, the Conveyor PLCs, and the Sorters. The status can either be Startup, Shutdown, Manual, Semi-automatic, Online, Offline, No Node, or Unknown. This process selects the necessary information from the database and displays it to the user.

U841.PN - PLC Status Inquiry

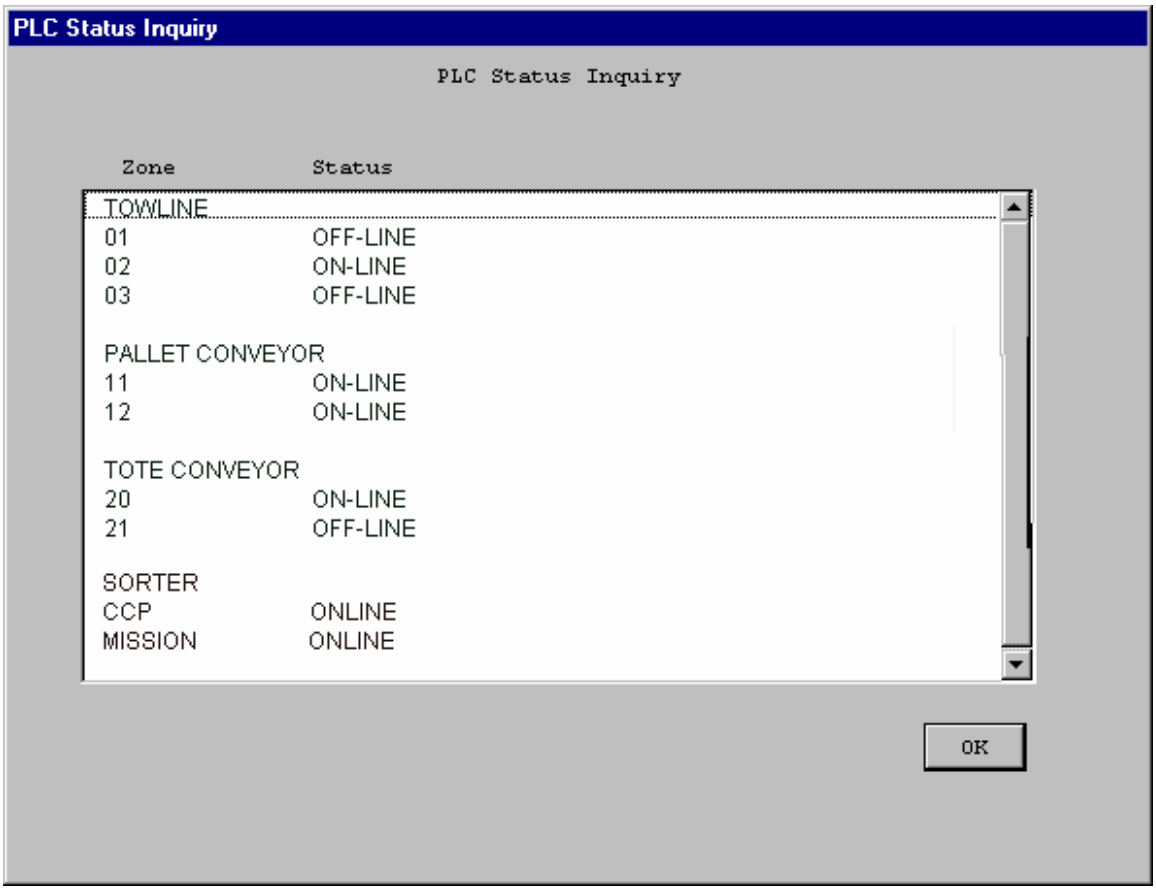

Figure 3.2.4.8.4.1-1 PLC Status Inquiry

Description

PLC Status Inquiry is used to obtain information about the communication links between (1) the ECS software that manages material movement by sending movement requests and receiving messages, and (2) The Programmable Logic Controllers that receive and implement these requests and send messages. If the user is experiencing difficulty moving material, the user can implement this conversation to determine the current operating condition of a towline, pallet conveyor, tote conveyor or sorter.

3.2.4.8.4.2 **U842.PN - Conveyance Inquiry**

Process Name	Process ID #	Date
Conveyance Inquiry	U842.PN	November 6, 1997

Requirement ID #(s)
SECS-RC2.10

Process Narrative

This process will display information for either a Cart ID or a Tote ID. It will receive the ID from the user and will query the database for the needed information. The process will then display necessary information about the conveyance, including control number, workstation area, and destinations.

U842.PN - Conveyance Inquiry

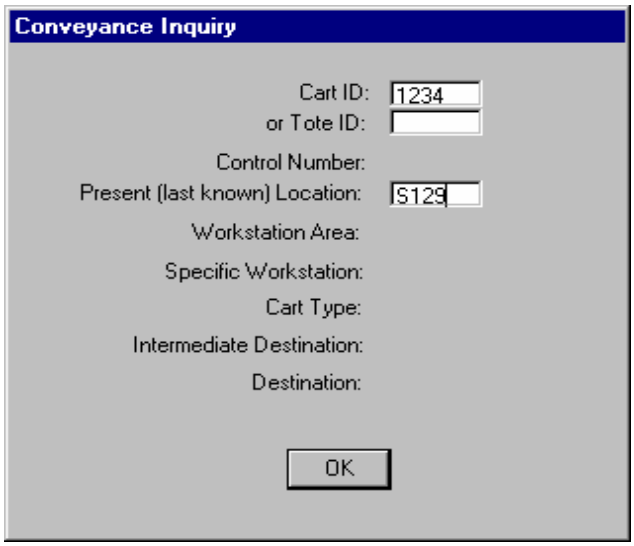

Figure 3.2.4.8.4.2-1 Conveyance Inquiry (Screen 1)

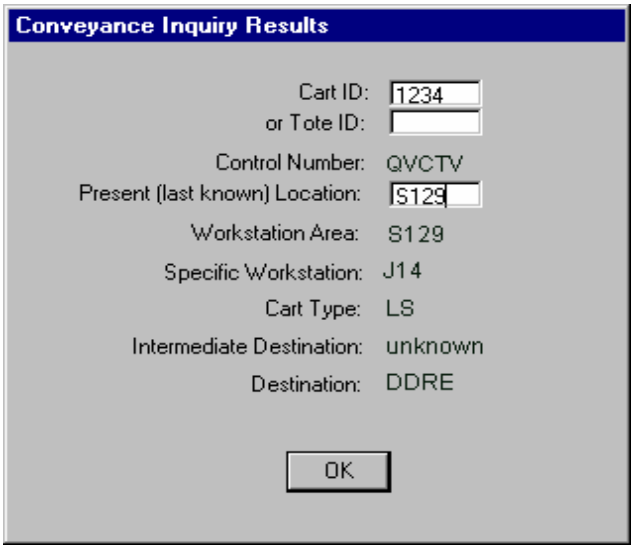

Figure 3.2.4.8.4.2-2 Conveyance Inquiry (Screen 2)

Description

Conveyance Inquiry is used to obtain information about a particular conveyance (tote or cart). To determine the conveyance's location and destination and what it is carrying, the user provides the tote or cart ID. The screen displays the control number of the material loaded on the conveyance (if any), the workstation area at which the conveyance was located, its intermediate assigned destination, its final destination and, for carts only, the cart type and the specific spur at which it was last located.

3.2.4.8.4.3 **U843.PN - Workstation Inquiry**

Process Name	Process ID #	Date
Workstation Inquiry	U843.PN	November 6, 1997

Requirement ID #(s)
SECS-RC2.11

Process Narrative

This process will display information about a given Workstation ID. The user will be prompted for an ID, and the process will show the activity count for that workstation. The activity count is either for the tote or the towline. This information is selected from the database.

U843.PN - Workstation Inquiry

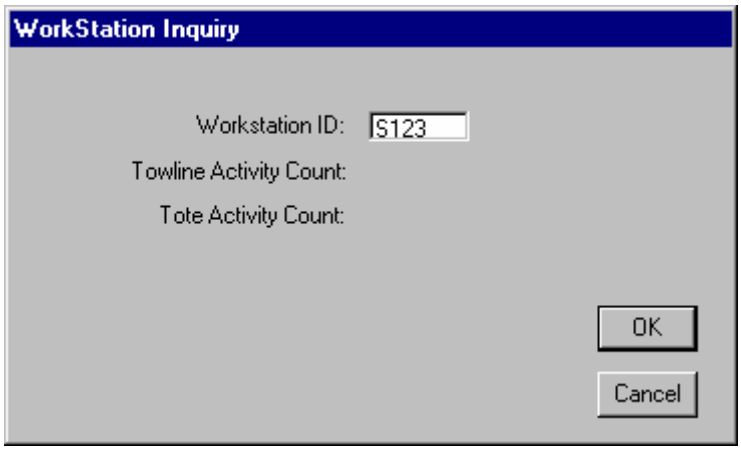

Figure 3.2.4.8.4.3-1 Workstation Inquiry (Screen 1)

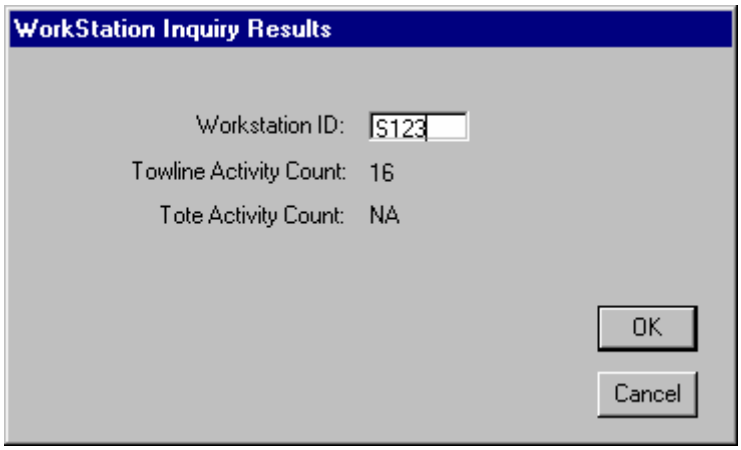

Figure 3.2.4.8.4.3-2 Workstation Inquiry (Screen 2)

Description

Workstation Inquiry is used to obtain activity counts for a particular pack lane/station, work area or spur. The activity counts can give the user a very general idea of the day's productivity at the location entered. Each total provides the number of times a specific activity occurs at that location.

3.2.4.8.4.4 **U844.PN - EDC-CN Inquiry**

Process Name	Process ID #	Date
EDC-CN Inquiry	U844.PN	November 6, 1997

Requirement ID #(s)
SECS-RC2.11

Process Narrative

This process is used to obtain status and location information about a specific EDC-CN. The user will be prompted for the CN. The process will then query the database and display the information about the EDC-CN, including the Status, Status Date and Time, the PCN, Intermediate Destination, Final Destination, and Shipment Unit Number.

U844.PN - EDC-CN Inquiry

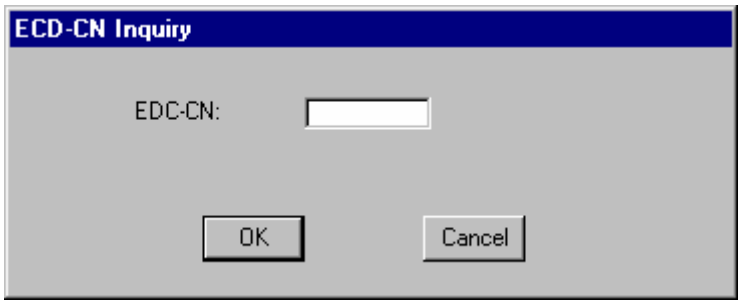

Figure 3.2.4.8.4.4-1 EDC-CN Inquiry (Screen 1)

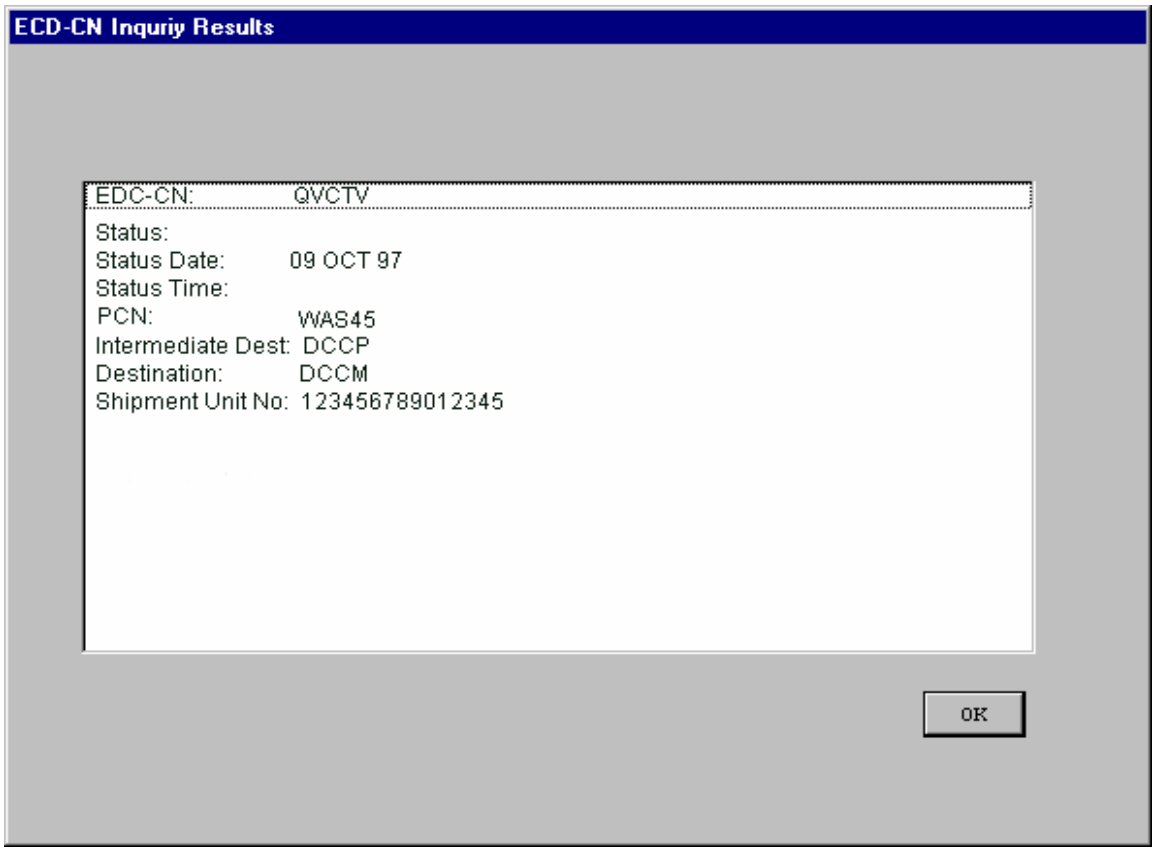

Figure 3.2.4.8.4.4-2 EDC-CN Inquiry (Screen 2)

Description

EDC-CN Inquiry is used to obtain status and location information about a specific EDC-CN. The user will be prompted for the CN. The process will then display the information about the EDC-CN, including the Status, Status Date and time, the PCN, Intermediate Destination, Final Destination, and Shipment Unit Number.

3.2.4.8.4.5 **U845.PN - Request Move**

Process Name	Process ID #	Date
Request Move	U845.PN	November 6, 1997

Requirement ID #(s)
SECS-RC2.3, SECS-RC2.10, SECS-RC2.11

Process Narrative

This process is used to move material either by the towline or by the tote conveyor. The user will enter the EDC-CN as well as the destination. The process will verify the information entered. When valid data is entered, the process will format and send a message (M01) to either the Towline Subcontroller or the Tote Conveyor Subcontroller.

U845.PN - Request Move

Figure 3.2.4.8.4.5-1 Request Move

Description

Request Move is used to route, by towline or tote conveyor, material for which the DSS has not already provided a destination. It can be used to route both normal EDC material and material that is not normally processed as part of EDC operations.

If the material has an assigned EDC-CN, the user enters that number and the destination. If the material has no EDC-CN, the user enters only the destination, and the ECS creates the EDC-CN. In both cases, the user then runs the appropriate conversation from a keypad to initiate the tote or cart move.

3.2.4.8.5 **U85.DFD**

Process ID #	Date
U85.DFD - Start/Stop Conveyance Page 1 of 2	November 6, 1997

Requirement ID #(s)

SECS-RC2.2, SECS-RC2.6, SECS-RC2.11

Data Flow Diagram

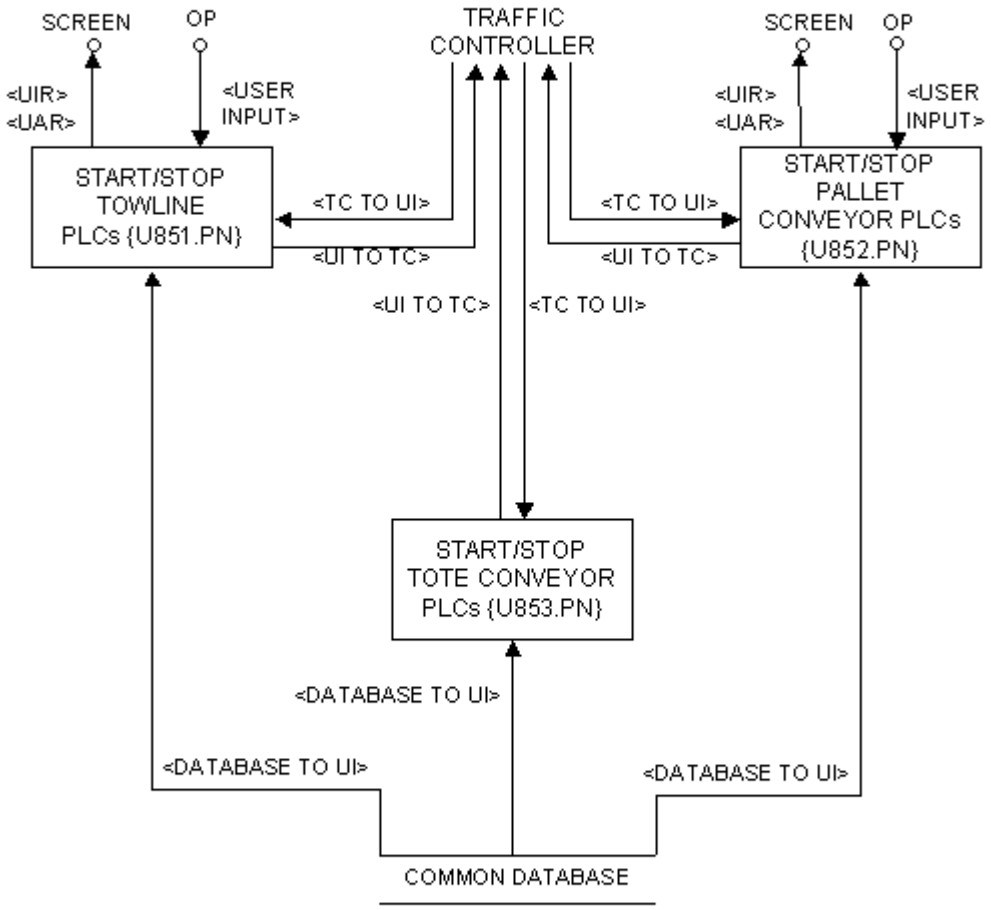

Process ID #	Date
U85.DFD - Start/Stop Conveyance Page 2 of 2	November 6, 1997

Requirement ID #(s)
SECS-RC2.2, SECS-RC2.6, SECS-RC2.11

Data Flow Diagram

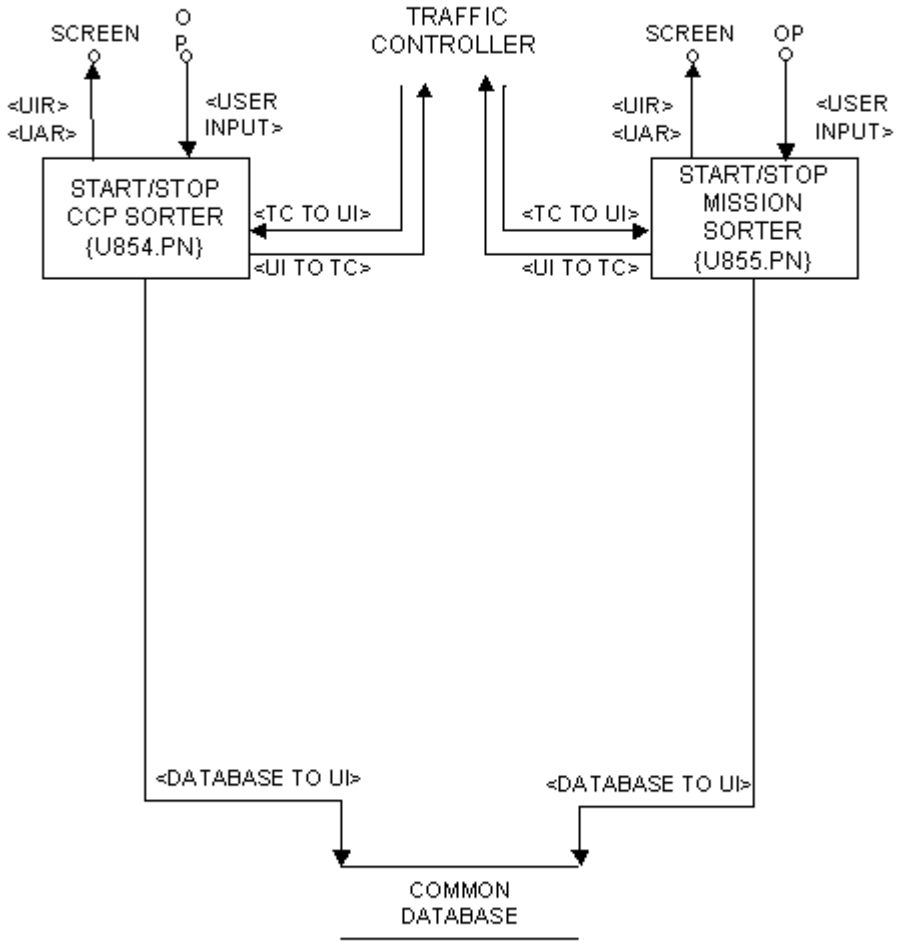

U85 - Start / Stop Conveyance Menu

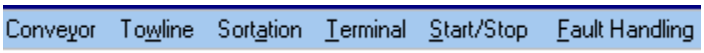

Figure 3.2.4.8.5-1 Start/Stop Main Menu

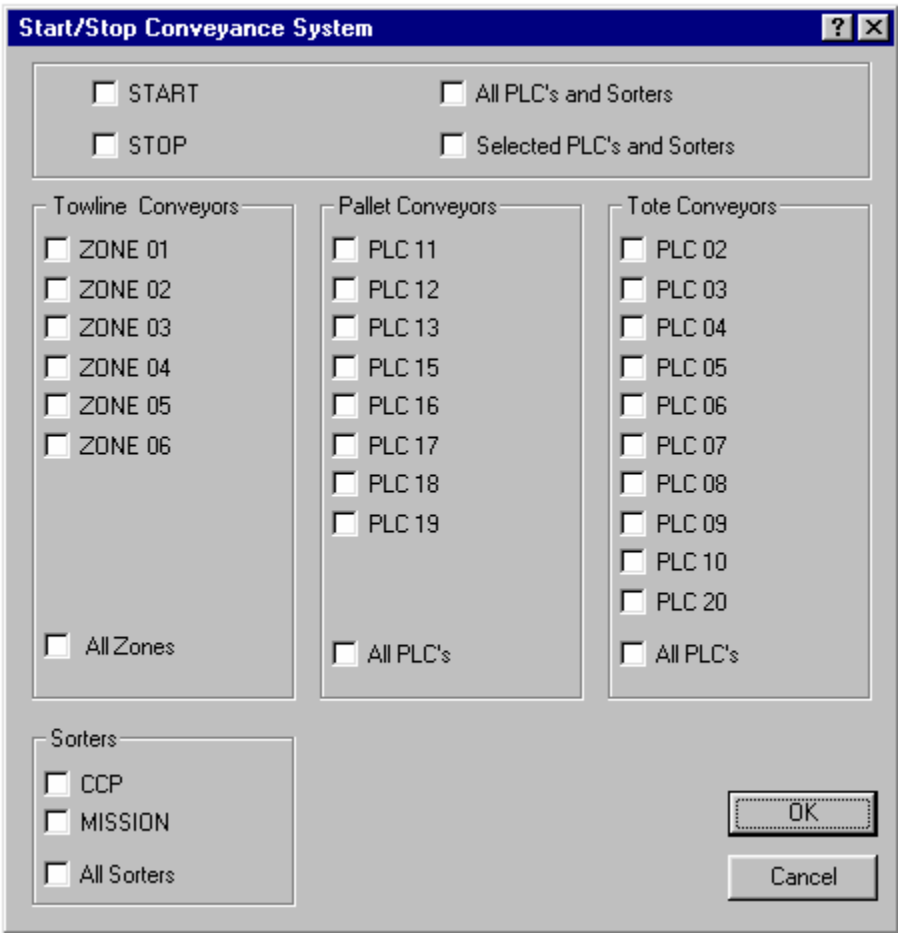

Figure 3.2.4.8.5-2 Start / Stop Conveyance

U85 - Start / Stop Conveyance Menu - Overview

There are three groups of ECS software that manage automatic movement of material throughout the DC:

- The towlines are managed by the towline system software. This software routes carts to a given destination by sending movement request to towline Programmable Logic Controllers (PLCs). There are six towlines PLCs, each controlling a separate towline PLC zone, within the DC.

- The pallet and tote conveyors are managed by the conveyor system software. This software routes pallets and totes to a given destination by sending movement requests to conveyor PLCs. There are eight pallet conveyor PLCs and PLC zones. There are 10 tote conveyor PLCs and PLC zones.

- The Mission and CCP Sorters are managed by the sortation system software. This software delivers material to a given chute by sending movement requests to Microprocessors. A separate microprocessor controls each sorter.

3.2.4.8.5.1 **U851.PN - Start/Stop Conveyance System**

Process Name	Process ID #	Date
Start/Stop Conveyance System	U851.PN	November 6, 1997

Requirement ID #(s)
SECS-RC2.2, SECS-RC2.6, SECS-RC2.11

Process Narrative

This process will either start or stop the Towline, Pallet ,Tote Conveyors , CCP and Mission Sorters. The process will receive the request from the user, and will format and send the Appropriate message(s) (A01's) to the pertinent Subcontroller (L.DFD) via the Traffic Subcontroller (T.DFD).

3.2.4.8.6 **U86.DFD**

Process ID #	Date
U86.DFD - Fault Handling Page 1 of 3	November 6, 1997

Requirement ID #(s)

SECS-RC2.1, SECS-RC2.2, SECS-RC2.3, SECS-RC2.4, SECS-RC2.5, SECS-RC2.6, SECS-RC2.7, SECS-RC2.8, SECS-RC2.9, SECS-RC2.10, SECS-RC2.11

Data Flow Diagram

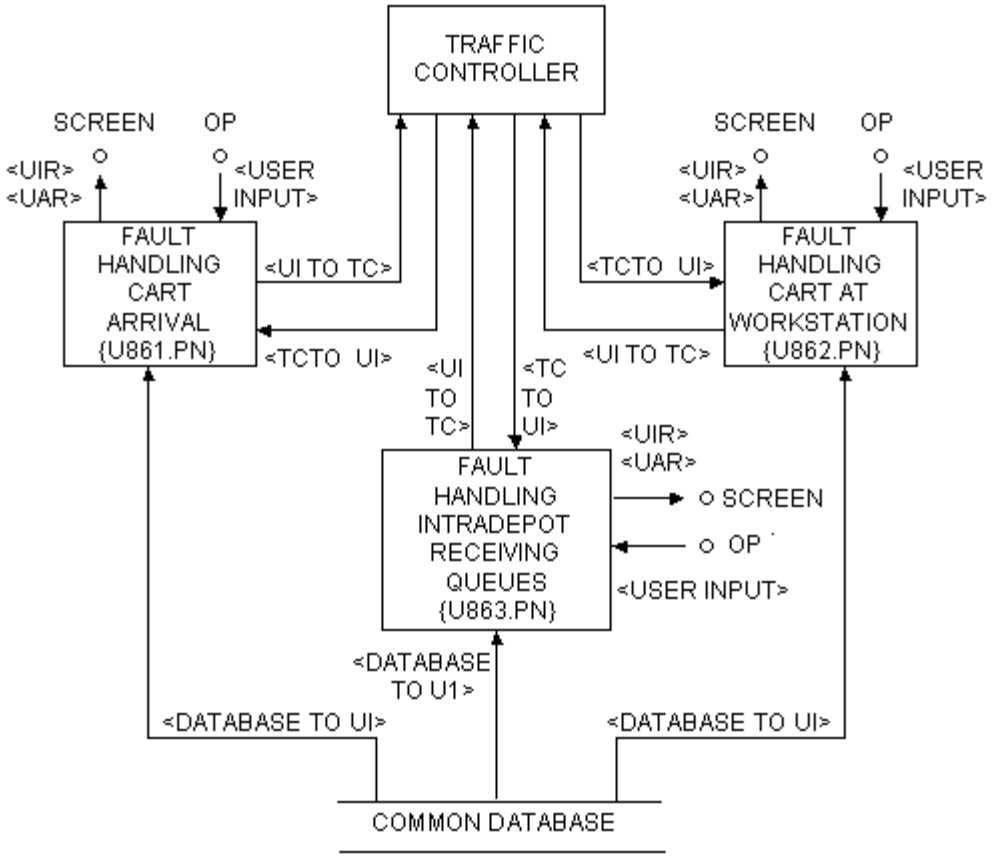

Process ID #	Date
U86.DFD - Fault Handling Page 2 of 3	November 6, 1997

Requirement ID #(s)

SECS-RC2.1, SECS-RC2.2, SECS-RC2.3, SECS-RC2.4, SECS-RC2.5, SECS-RC2.6, SECS-RC2.7, SECS-RC2.8, SECS-RC2.9, SECS-RC2.10, SECS-RC2.11

Data Flow Diagram

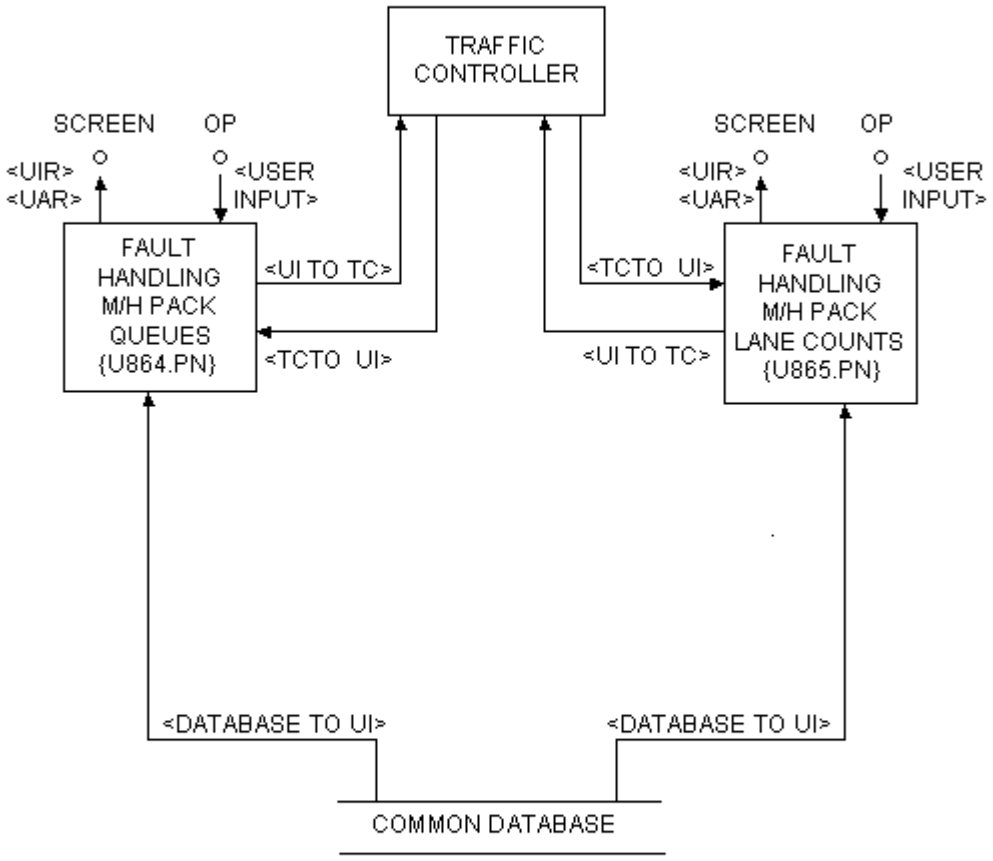

Process ID #	Date
U86.DFD - Fault Handling Page 3 of 3	November 6, 1997

Requirement ID #(s)

SECS-RC2.1, SECS-RC2.2, SECS-RC2.3, SECS-RC2.4, SECS-RC2.5, SECS-RC2.6, SECS-RC2.7, SECS-RC2.8, SECS-RC2.9, SECS-RC2.10, SECS-RC2.11

Data Flow Diagram

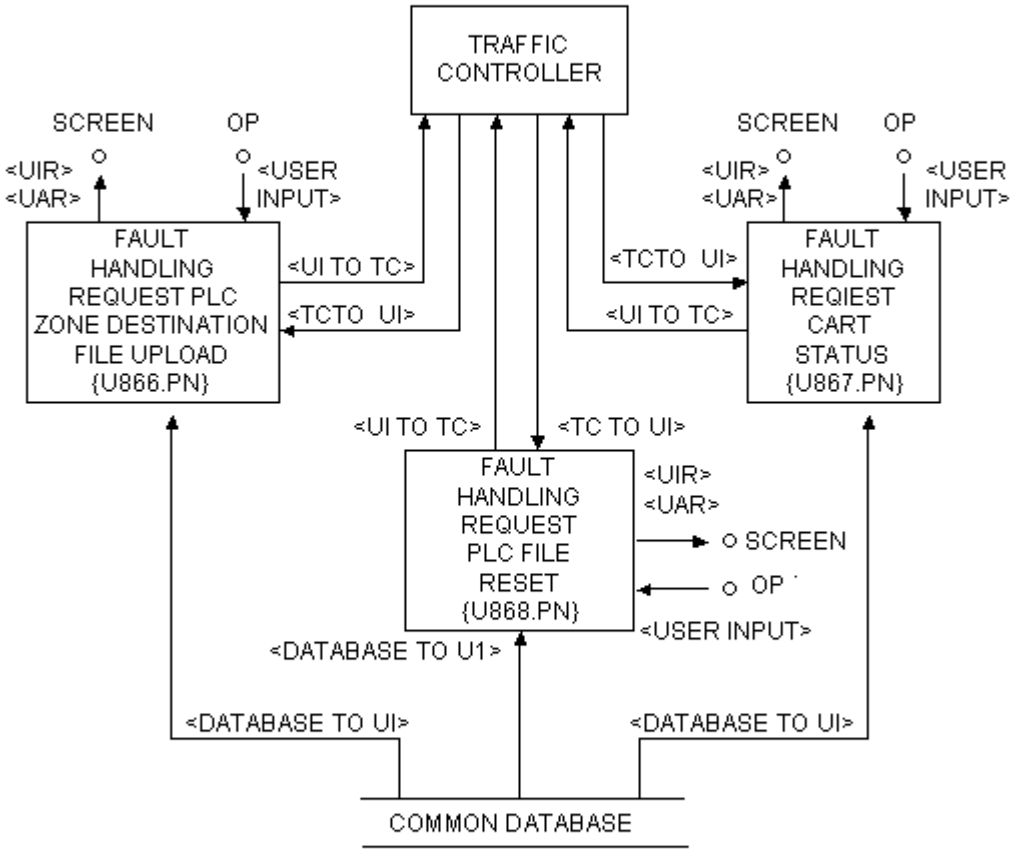

U86 - Fault Handling Menu

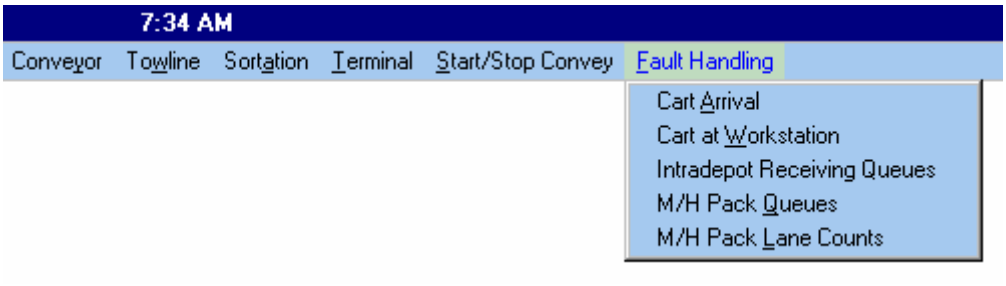

Figure 3.2.4.8.6-1 Fault Handling Menu

Overview

The conversations on the Fault Handling Menu are used to correct discrepancies between the locations of a cart in the ECS and the physical location of the cart in the DC. Specifically, the conversation notify the ECS that (1) a cart has been diverted to a spur, or (2) a cart is located at a specific place on the spur.

3.2.4.8.6.1 U861.PN - Fault Handling Cart Arrival

Process Name	Process ID #	Date
Fault Handling Cart Arrival	U861.PN	November 6, 1997

Requirement ID #(s)
SECS-RC2.2, SECS-RC2.10, SECS-RC2.11

Process Narrative

A Cart Arrival process is initiated by the user to tell ECS that a cart has arrived at a towline spur or transfer. This process will allow the user to enter in a Cart ID as well as to enter in the Arrival Spur. After validating the information, the process will format and send a message (J93) to the Towline Subcontroller (L.DFD) via the Traffic Subcontroller (T.DFD).

U861.PN - Fault Handling - Cart Arrival

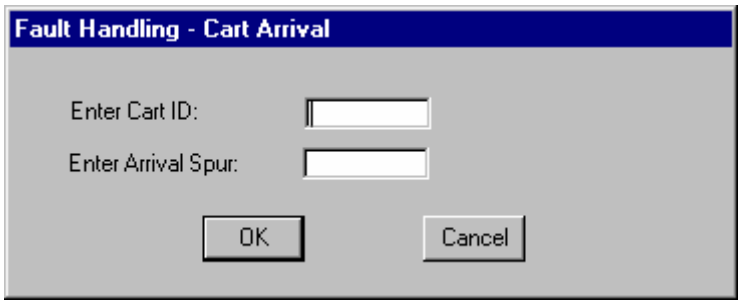

Figure 3.2.4.8.6.1-1 Fault Handling - Cart Arrival

Description

Fault Handling - Cart Arrival is used to correct the location of a cart in the ECS records. It is used when a cart has been diverted to a spur, but the ECS does not think the cart is on that spur. This would be the case if the user tried to run a conversation and received an error message, such as "CART NOT AT WORKSTATION", indicating the cart was not located at the workstation.

3.2.4.8.6.2 U862.PN - Fault Handling Cart At Workstation

Process Name	Process ID #	Date
Fault Handling Cart At Workstation	U862.PN	November 6, 1997

Requirement ID #(s)
SECS-RC2.2, SECS-RC2.10, SECS-RC2.11

Process Narrative

A Cart At Workstation process is initiated by the user to tell ECS the location of a cart. The message is initiated when a cart is physically located at a specific place on a spur, but the ECS does not know the cart is located there. This process will allow the user to enter in a Cart ID as well as to enter in the Arrival Spur. After validating the information, the process will format and send a message (J93) to the Towline Subcontroller (L.DFD) via the Traffic Subcontroller (T.DFD).

U862.PN - Fault Handling - Cart at Workstation

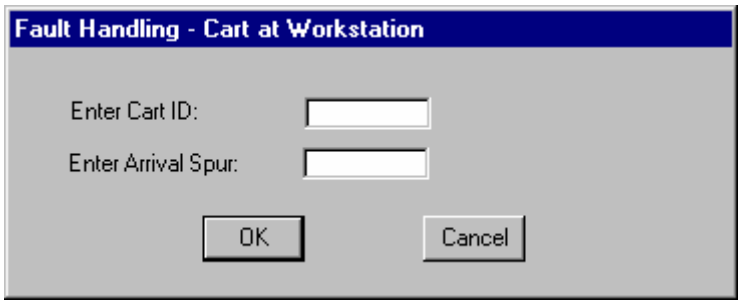

Figure 3.2.4.8.6.2-1 Fault Handling - Cart at Workstation

Description

Fault Handling - Cart at Workstation is used to correct the location of a cart in the ECS records. It is used when a cart is physically located at a specific place on a spur, but the ECS does not know the cart is located there.

3.2.4.8.6.3 U863.PN - Fault Handling Intradepot Receiving Queues

Process Name	Process ID #	Date
Fault Handling Intradepot Receiving Queues	U863.PN	November 6, 1997

Requirement ID #(s)
SECS-RC2.2, SECS-RC2.10, SECS-RC2.11

Process Narrative

This process will display information for a given queue at Intradepot Receiving. The user will be prompted for a Queue ID, which will then be validated. Then this process will select the necessary information from the database and will display the queue as well as Cart IDs, CNs, and Destinations for the carts listed in the queue. The user has the ability to change the Queue Position for a cart in the queue, and the user may also add new Cart IDs to the queue. Whenever a change is made to information about the queue, this process will format and send a message (J95) to the Towline Subcontroller (L.DFD) via the Traffic Subcontroller (T.DFD).

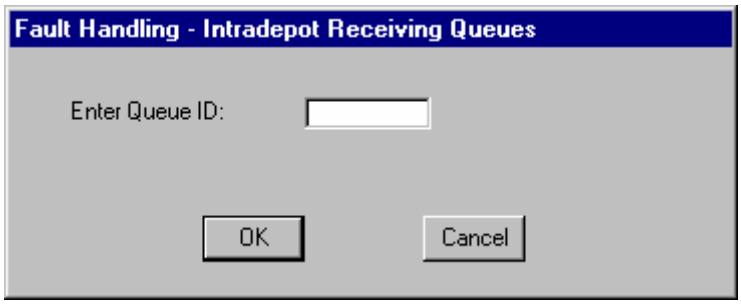

Figure 3.2.4.8.6.3-1 Fault Handling - Intradepot Receiving Queues (Screen 1)

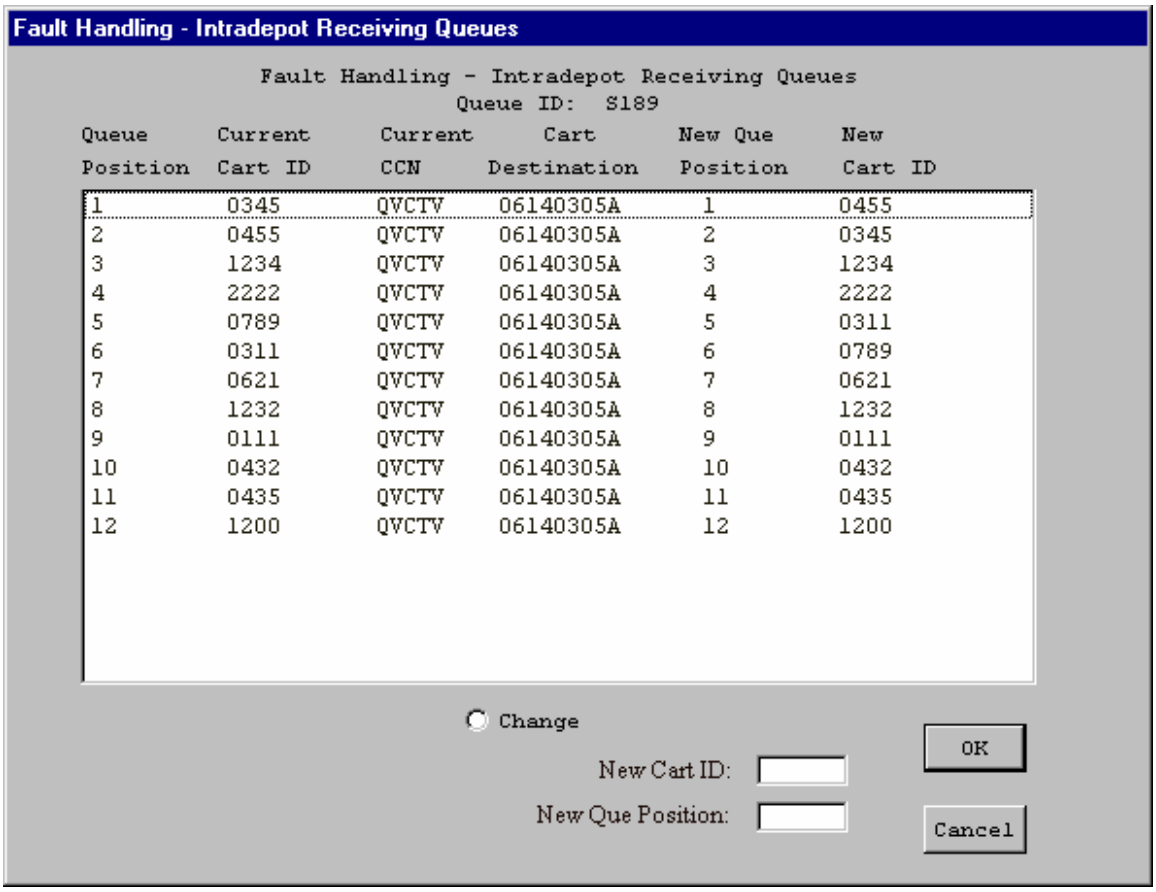

Queue Position	Current Cart ID	Current CCN	Cart Destination	New Que Position	New Cart ID
1	0345	QVCTV	06140305A	1	0455
2	0455	QVCTV	06140305A	2	0345
3	1234	QVCTV	06140305A	3	1234
4	2222	QVCTV	06140305A	4	2222
5	0789	QVCTV	06140305A	5	0311
6	0311	QVCTV	06140305A	6	0789
7	0621	QVCTV	06140305A	7	0621
8	1232	QVCTV	06140305A	8	1232
9	0111	QVCTV	06140305A	9	0111
10	0432	QVCTV	06140305A	10	0432
11	0435	QVCTV	06140305A	11	0435
12	1200	QVCTV	06140305A	12	1200

Figure 3.2.4.8.6.3-2 Fault Handling - Intradepot Receiving Queues (Screen 2)

Description

Fault Handling - Intradepot Receiving Queues is used to resequence the carts in the intradepot receiving queues within the ECS files. It is used when the physical location of the carts in the queues do not match the cart locations in the ECS.

3.2.4.8.6.4 **U864.PN - Fault Handling M/H Pack Queues**

Process Name	Process ID #	Date
Fault Handling M/H Pack Queues	U864.PN	November 6, 1997

Requirement ID #(s)
SECS-RC2.2, SECS-RC2.10, SECS-RC2.11

Process Narrative

This process will display information for a given queue at M/H Pack. The user will be prompted for a Queue ID, which will then be validated. Then this process will select the necessary information from the database and will display the queue as well as Cart Ids, CNs, Destinations for the carts listed in the queue. The user has the ability to change the Queue Position for a cart in the queue, and the user may also add new Cart IDs to the queue. Whenever a change is made to information about the queue, this process will format and send a message (J95) to the Towline Subcontroller (L.DFD) via the Traffic Subcontroller (T.DFD).

U864.PN - Fault Handling - Medium / Heavy Pack Queues

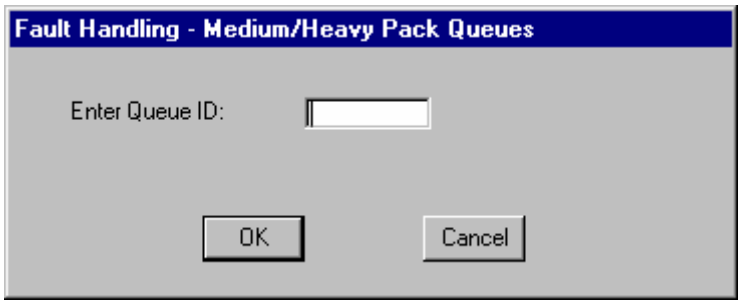

Figure 3.2.4.8.6.4-1 Fault Handling - Medium / Heavy Pack Queues (Screen 1)

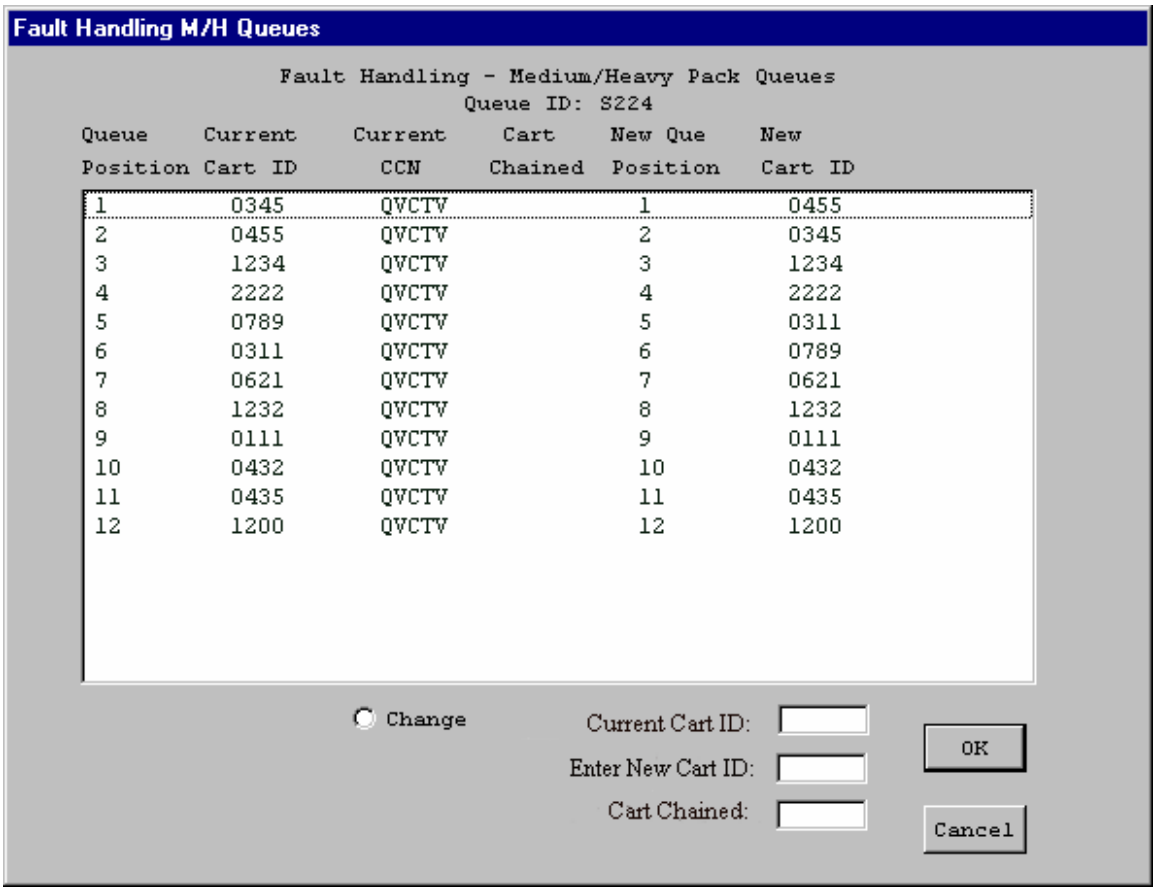

Queue Position	Current Cart ID	Current CCN	Cart Chained	New Que Position	New Cart ID
1	0345	QVCTV		1	0455
2	0455	QVCTV		2	0345
3	1234	QVCTV		3	1234
4	2222	QVCTV		4	2222
5	0789	QVCTV		5	0311
6	0311	QVCTV		6	0789
7	0621	QVCTV		7	0621
8	1232	QVCTV		8	1232
9	0111	QVCTV		9	0111
10	0432	QVCTV		10	0432
11	0435	QVCTV		11	0435
12	1200	QVCTV		12	1200

Figure 3.2.4.8.6.4-2 Fault Handling - Medium / Heavy Pack Queues (Screen 2)

Description

Fault Handling - Medium / Heavy Pack Queues is used to resequence the carts in the medium / heavy pack queues within the ECS files. It is used when the physical location of the carts in the queues do not match the cart locations in the ECS.

3.2.4.8.6.5 U865.PN - Fault Handling M/H Pack Lane Counts

Process Name	Process ID #	Date
Fault Handling M/H Pack Lane Counts	U865.PN	November 6, 1997

Requirement ID #(s)
SECS-RC2.2, SECS-RC2.10, SECS-RC2.11

Process Narrative

This process will display the counts for the lanes at M/H Pack. For each lane, this process will display the number of carts in the lane, the number of carts enroute to the lane, and the Chain ID and lock status if they apply. This information is selected from the database. The user has the ability to change either the count for the carts within the lane, or the count for the number of carts enroute to the lane. The user can also unlock a lane from this process. If changes are made, this process will format and send a message (J97) to the Towline Subcontroller (L.DFD) via the Traffic Subcontroller (T.DFD).

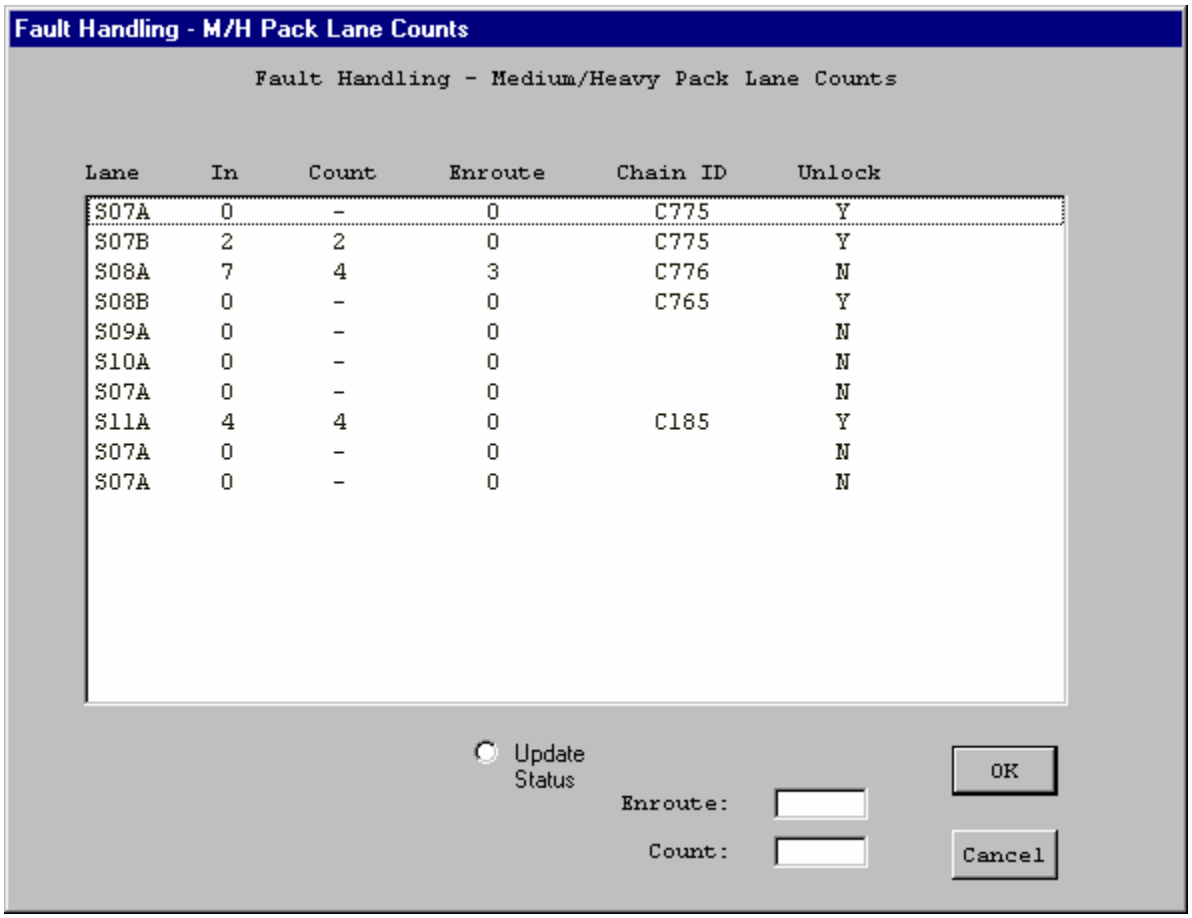

Figure 3.2.4.8.6.5-1 Fault Handling - Medium / Heavy Pack Lane Counts

Description

Fault Handling - Medium / Heavy Pack Lanes Counts is used to reset the lane counts and unlock chains in the medium/heavy pack lanes. It is used when the physical lane counts do not match the lane counts in the ECS.

It may also be used to unlock a locked lane for which the Chain ID no longer exists. This could happen if the operators have removed any pallets from the lane conveyor.

3.2.4.8.6.6 U866.PN - Fault Handling Request PLC Zone Destination File Upload

Process Name	Process ID #	Date
Fault Handling Request PLC Zone Destination File Upload	U866.PN	November 6, 1997

Requirement ID #(s)
SECS-RC2.2, SECS-RC2.11

Process Narrative

This process is generated by the user when they wish to upload the PLC Zone Destination File. The user will be prompted for the type of upload they wish to perform. Then the process will format and send a message (T07) to the Towline Subcontroller which will continue processing the request. This process will also receive the response from the Towline Subcontroller (L.DFD) via the Traffic Subcontroller (T.DFD). This message (U08 or U10) will be processed and the user will be notified.

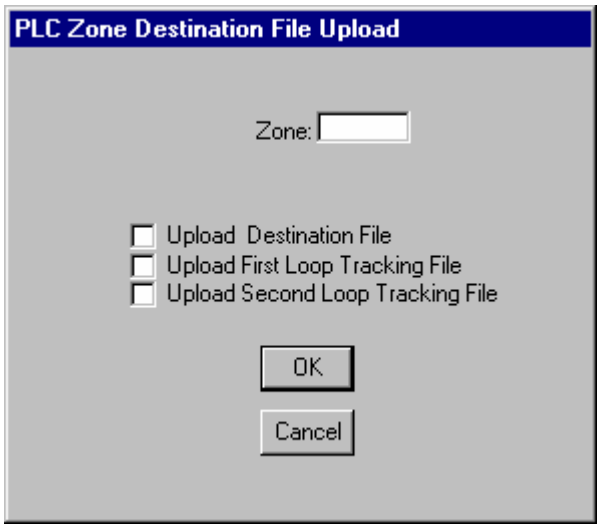

Figure 3.2.4.8.6.6-1 Fault Handling - Request PLC Zone Destination File Upload

Description

Request PLC Zone Destination File Upload is used to upload the PLC Zone Destination File or the first and second loop tracking files. Then the process will format and send a message to the Towline Subcontroller which will continue processing the request. This process will also receive the response from the Towline Subcontroller.

3.2.4.8.6.7 U867.PN - Fault Handling Request Cart Status

Process Name	Process ID #	Date
Fault Handling Request Cart Status	U867.PN	November 6, 1997

Requirement ID #(s)
SECS-RC2.2, SECS-RC2.10, SECS-RC2.11

Process Narrative

This process is generated by the user when they wish to request the information on a cart. The information that will be displayed to the user is the cart destination, the recirculation count, the chain ID, and the chain length. This process will prompt the user for a Cart ID and will then format and send a message (T11) to the Towline Subcontroller (L.DFD) via the Traffic Subcontroller (T.DFD). This process will also receive the response message (U12) from the Towline Subcontroller (L.DFD) via the Traffic Subcontroller (T.DFD) which will be displayed to the user.

U867.PN - Fault Handling - Request Cart Status

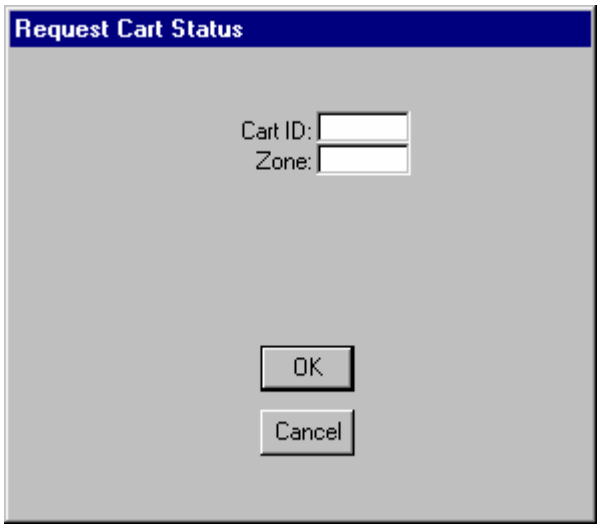

Figure 3.2.4.8.6.7-1 Fault Handling - Request Cart Status

Description

The Fault Handling - Request Cart Status process is used to inquire about the cart destination, the recirculation count, the Chain ID, and the chain length on a specific towline zone. The process will format and send a message to the Towline Subcontroller. This process will also receive the response from the Towline Subcontroller which will be displayed to the user.

3.2.4.8.6.8 U868.PN - Fault Handling Request PLC File Reset

Process Name	Process ID #	Date
Fault Handling Request PLC File Reset	U868.PN	November 6, 1997

Requirement ID #(s)
SECS-RC2.2, SECS-RC2.11

Process Narrative

This process will allow the user to request the resetting of the PLC file. This conversation should only be used in case of emergency! The user will enter the zone that is to be reset. This process will then format and send a message (T13) to the Towline Subcontroller (L.DFD) via the Traffic Subcontroller (T.DFD).

U868.PN - Fault Handling - Request PLC File Reset

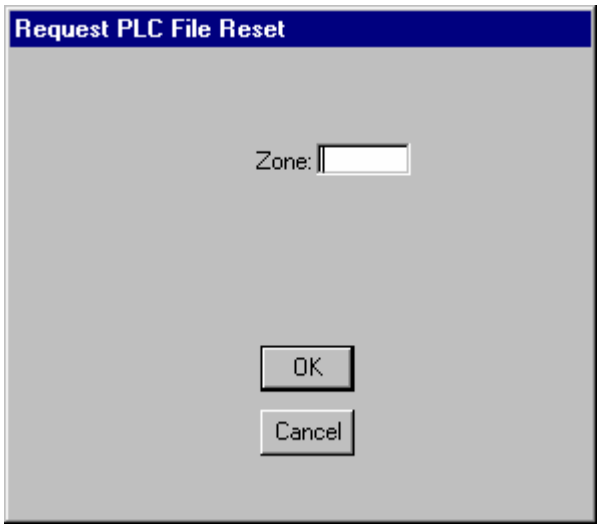

Figure 3.2.4.8.6.8-1 Fault Handling - Request PLC File Reset

Description

The Fault Handling - Request PLC File Reset conversation should only be used in case of emergency! The user will enter the zone that is to be reset. This conversation will reset and clear all destination, tracking, chain tracking, and other configurable towline PLC files. The process will then format and send a message to the Towline Subcontroller.

3.2.4.9 **U9.DFD**

Process Name	Date
U9.DFD - M02 Message	April 14, 2004

Requirement ID #(s)

SECS-RC2.1, SECS-RC2.2, SECS-RC2.3, SECS-RC2.10, SECS-RI10, SECS-RC1.1.17

Process Narrative

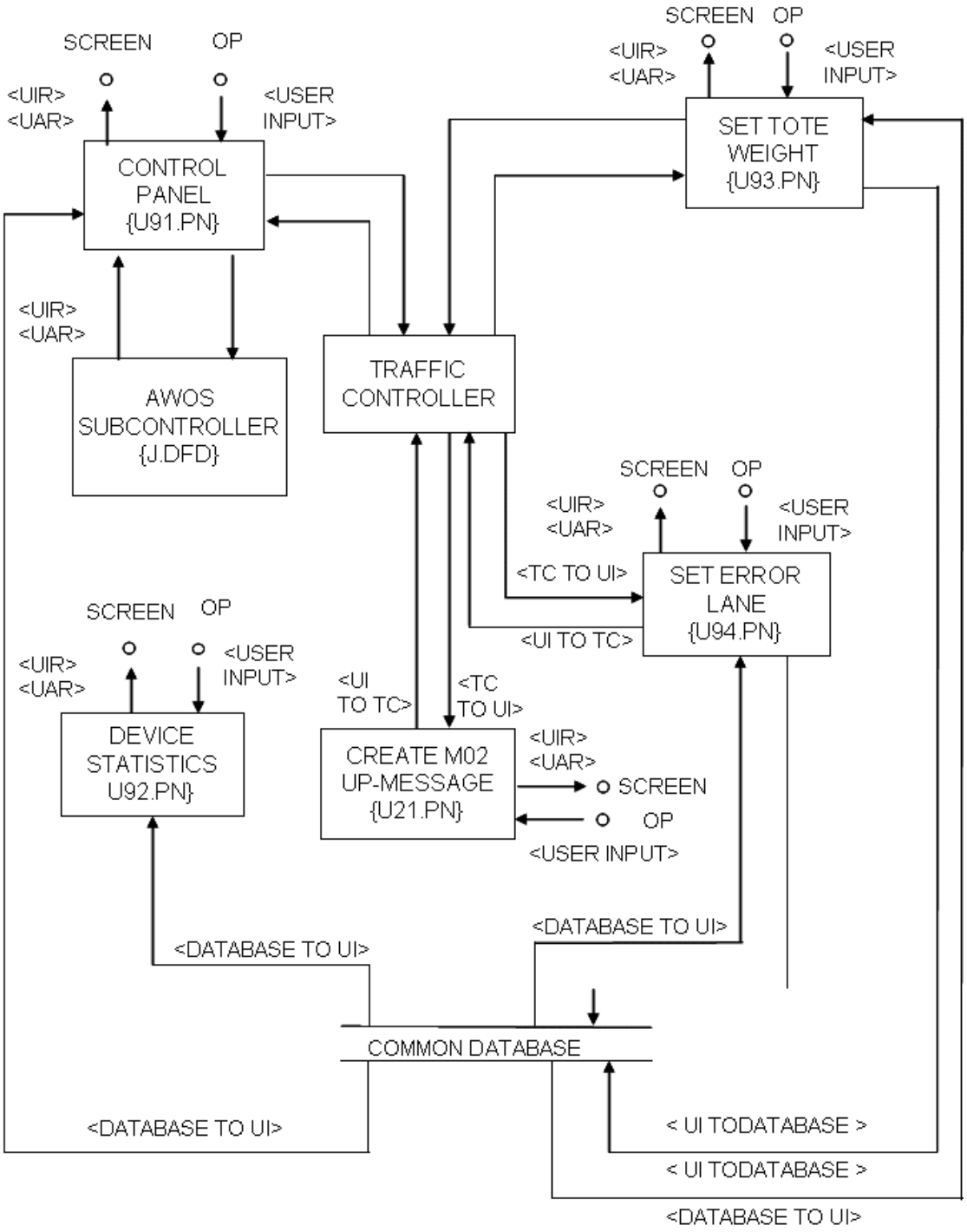

3.2.4.9.1 U91.PN-Control Panel

Process Name	Process ID #	Date
Control Panel	U91.PN	April 21, 1999

Requirement ID #(s)
SECS-RC2.1, SECS-RC2.2, SECS-RC2.3, SECS-RC2.10, SECS-RI10, SECS-RC1.1.17

Process Narrative

This process will display Real-time data for all AWOS Stations. The first screen shown will provide data for only pertinent AWOS stations and devices that are currently active at a given site. The Transaction Browse Button will allow the user to choose a second screen that will display the current Database Transactions, updated approximately every 5 seconds. The History Browse Button will allow the user to choose a third screen that will display a History Transaction Log.

Figure 3.2.4.9.1-1 Control Panel (Screen 1)

Figure 3.2.4.9.1-2 Control Panel (Screen 2)

Figure 3.2.4.9.1-3 Control Panel (Screen 3)

Description

The User specifies the Station (AWOS 1, AWOS 2 or AWOS 3) to be selected from the AWOS Station Selection screen.

Control Panel displays Real-time data for all AWOS Station devices that are pertinent to the current site.

The user can select two additional screens via the Transaction Browse or History Browse Button that provides database or log information.

3.2.4.9.2 U92.PN-Device Statistics

Process Name	Process ID #	Date
Device Statistics	U92.PN	April 21, 1999

Requirement ID #(s)
SECS-RC2.1, SECS-RC2.2, SECS-RC2.3, SECS-RC2.10, SECS-RI10, SECS-RC1.1.17

Process Narrative

This process is used to display the current device status (reads and faults) of all devices assigned to a specific AWOS Station. Also provided is a Reset button that initiates (clears) all display fields and sets the Last Reset Time onto the screen.

Figure 3.2.4.9.2-1 Device Statistics (Screen 1)

Figure 3.2.4.9.2-2 Device Statistics (Screen 1)

Description

The User specifies the Station (AWOS 1, AWOS 2 or AWOS 3) to be selected from the AWOS Station Selection screen.

Device Statistics is used to provide maintenance personnel with a cumulative total of reads and faults occurrences for each device associated with a specific AWOS Station. User can reset the counts and the screen will reflect the time of the reset to aid in trouble shooting device failures.

3.2.4.9.3 U93.PN-Set Tote Weight

Process Name	Process ID #	Date
Set Tote Weight	U93.PN	April 21, 1999

Requirement ID #(s)
SECS-RC2.1, SECS-RC2.2, SECS-RC2.3, SECS-RC2.10, SECS-RI10, SECS-RC1.1.17

Process Narrative

This process is used to set the tote weight for a selected AWOS station. The user can set a new weight to associate with the Tote. The process will then format and send a message to the Subcontroller via the Traffic Subcontroller (T.DFD) to have the tote updated in the database.

Figure 3.2.4.9.3-1 Set Tote Weight

Description

The User specifies the Station (AWOS 1, AWOS 2 or AWOS 3) to be selected from the AWOS Station Selection screen.

The User can change the Tote weight to assure accurate tare weights for a specific AWOS Station. When the ECS is started, the initial status of each AWOS Station Tote weight will reflect the same as it was when the ECS was last shut down.

3.2.4.9.4 U94.PN-Set Error Lane

Process Name	Process ID #	Date
Set Error Lane	U94.PN	April 21, 1999

Requirement ID #(s)
SECS-RC2.1, SECS-RC2.2, SECS-RC2.3, SECS-RC2.10, SECS-RI10, SECS-RC1.1.17

Process Narrative

This process is used to update the logical status of the AWOS Error lanes. The first screen shown will allow the user to choose the Station (AWOS 1, AWOS 2 or AWOS 3) . After the functional area has been selected, this process will query the database for information. It will then display the Set Error Lane function (mnemonic), the lanes available and the current error lane number. The user will then be able to highlight the lane and check a box to set a lane as the new Error Lane (NOTE: only one lane can be selected as the designated error lane). After the user confirms (Select Button) the decision to change the lane, this process will format and send a message to the Subcontroller via the Traffic Subcontroller (T.DFD) for further processing.

Figure 3.2.4.9.4-1 Set Error Lane (Screen 1)

Figure 3.2.4.9.4-2 Set Error Lane (Screen 2)

Description

The User specifies the Station (AWOS 1, AWOS 2 or AWOS 3) to be selected from the AWOS Station Selection screen. User Then specifies the Diverter (Divert 1, Divert 2 or Divert 3) to display the proper available lanes.

The User can change the Error Lane to assure uniform flow of material through out the AWOS Station. When the ECS is started, the initial status of each AWOS Station Error Lane will reflect the same as it was when the ECS was last shut down.

3.2.4.9.5 U95.PN-Set Lanes Greater Than 10Lbs

Process Name	Process ID #	Date
Set Lanes Greater Than 10Lbs	U954.PN	April 14, 2004

Requirement ID #(s)

SECS-RC2.1, SECS-RC2.2, SECS-RC2.3, SECS-RC2.10, SECS-RI10, SECS-RC1.1.17

Process Narrative

This process is used to update the logical status of the AWOS Lanes Greater Than 10Lbs. The first screen shown will allow the user to choose the Station AWOS 1 through, AWOS 4 (depending on the number available at a given site). After the functional area has been selected, this process will query the database for information. It will then display the Set Lanes Greater Than 10Lbs function (mnemonic), the lanes available and the current Greater Than 10Lbs lane numbers. The user will then be able to highlight the lane or lanes and check a box to set the lanes as the new Greater Than 10Lbs Lanes (NOTE: only two lanes can be selected as the designated Greater Than 10Lbs lanes). After the user confirms (Select Button) the decision to change the lanes, this process will format and send a message to the Subcontroller via the Traffic Subcontroller (T.DFD) for further processing.

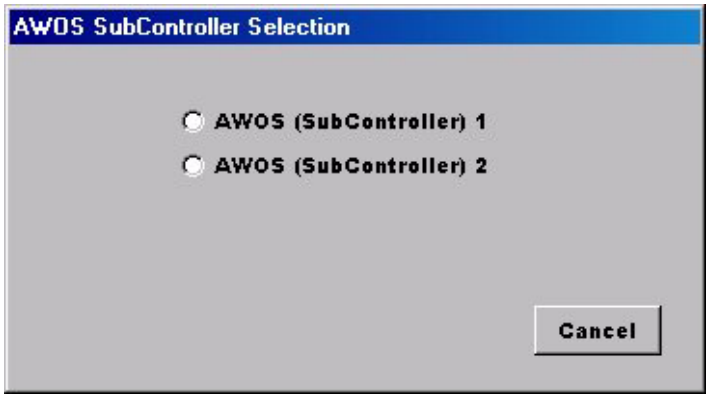

Figure 3.2.4.9.5-1 Set Lanes Greater Than 10Lbs (Screen 1)

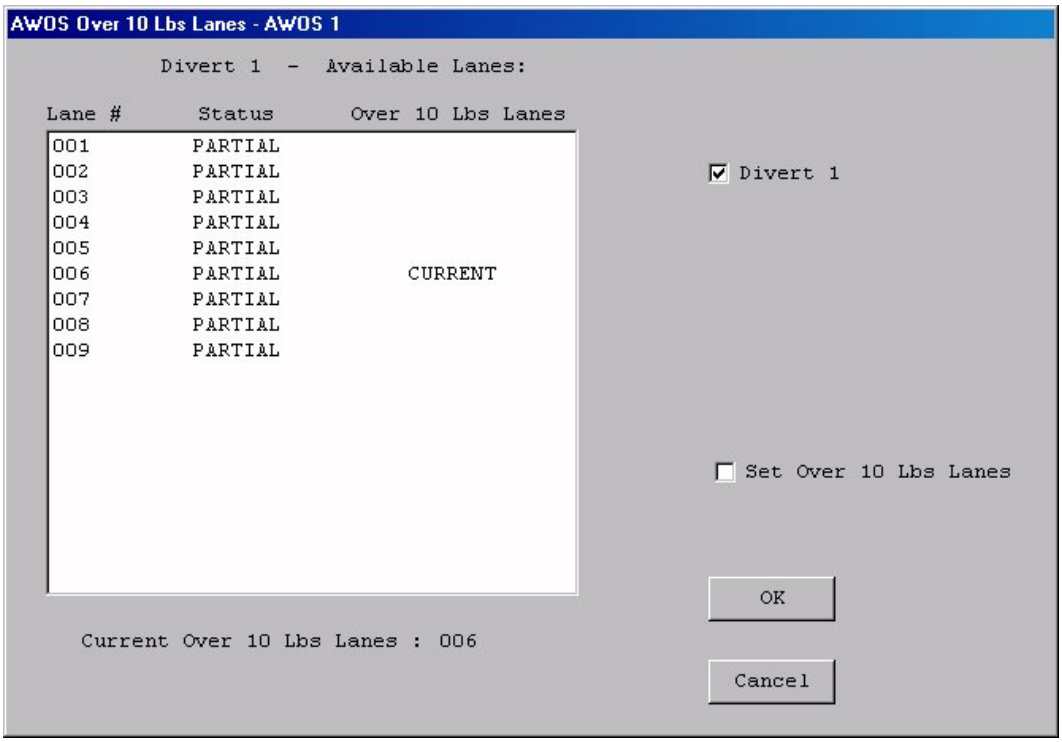

Figure 3.2.4.9.5-2 Set Lanes Greater Than 10Lbs (Screen 2)

Description

The User specifies the Station AWOS 1 through, AWOS 4 (depending on the number available at a given site) from the AWOS Station Selection screen. User then specifies the Diverter (Divert 1, Divert 2 or Divert 3) to display the proper available lanes.

The User can change the Lanes designated to be Greater Than 10Lbs to assure uniform flow of material through out the AWOS Station. When the ECS is started, the initial status of each AWOS Station Greater Than 10Lbs Lanes will reflect the same as it was when the ECS was last shut down.

3.2.4.10 **U10.DFD**

Process ID #		Date
U10.DFD -ASRS	Page 1 of 4	August 18, 2000

Requirement ID #(s)
SECS-RC2.1, SECS-RC2.2

Data Flow Diagram

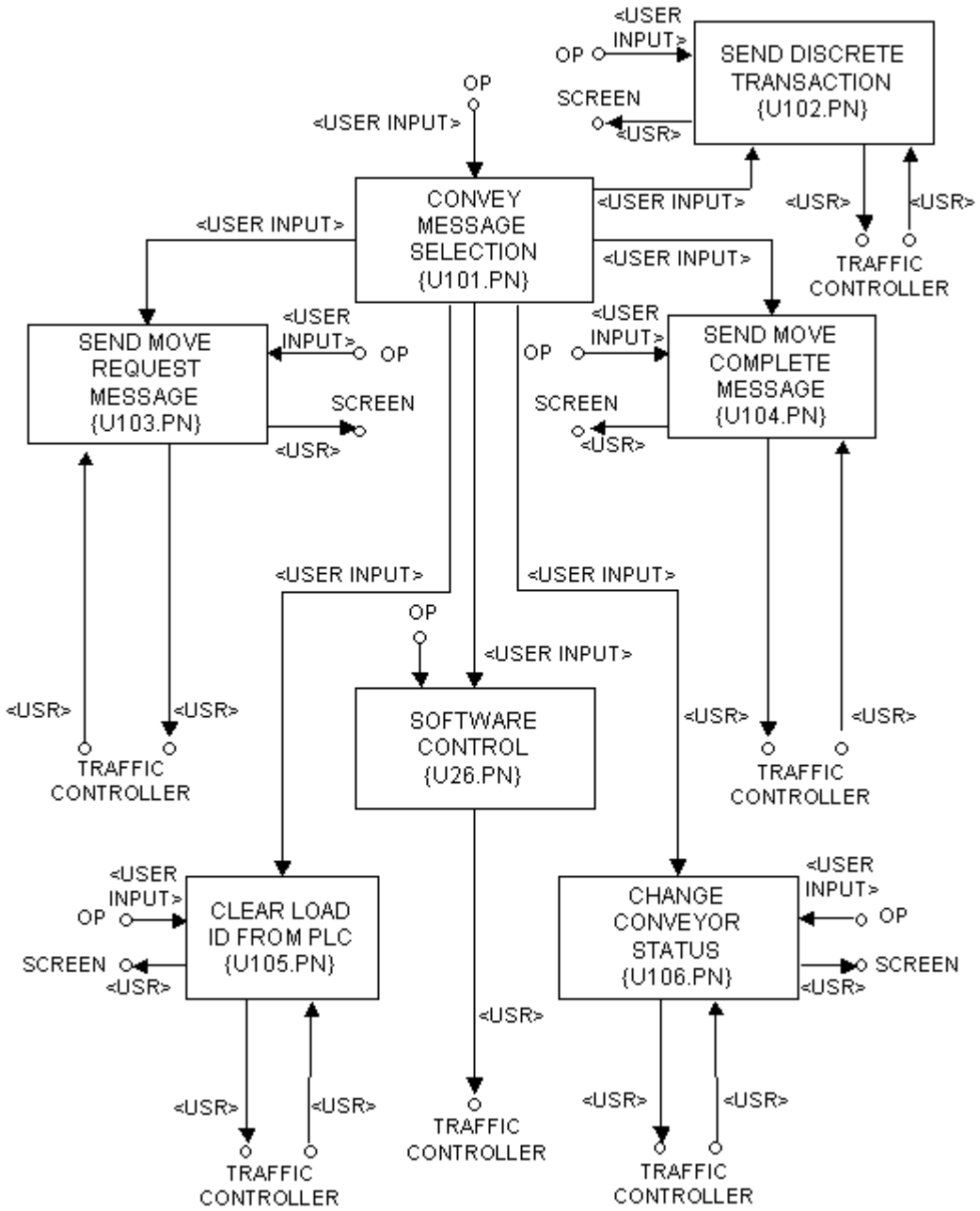

Process ID #		Date
U10.DFD-ASRS	Page 2 of 4	August 18, 2000

Requirement ID #(s)
SECS-RC2.1, SECS-RC2.2, SECS-RC2.7, SECS-RC2.11

Data Flow Diagram

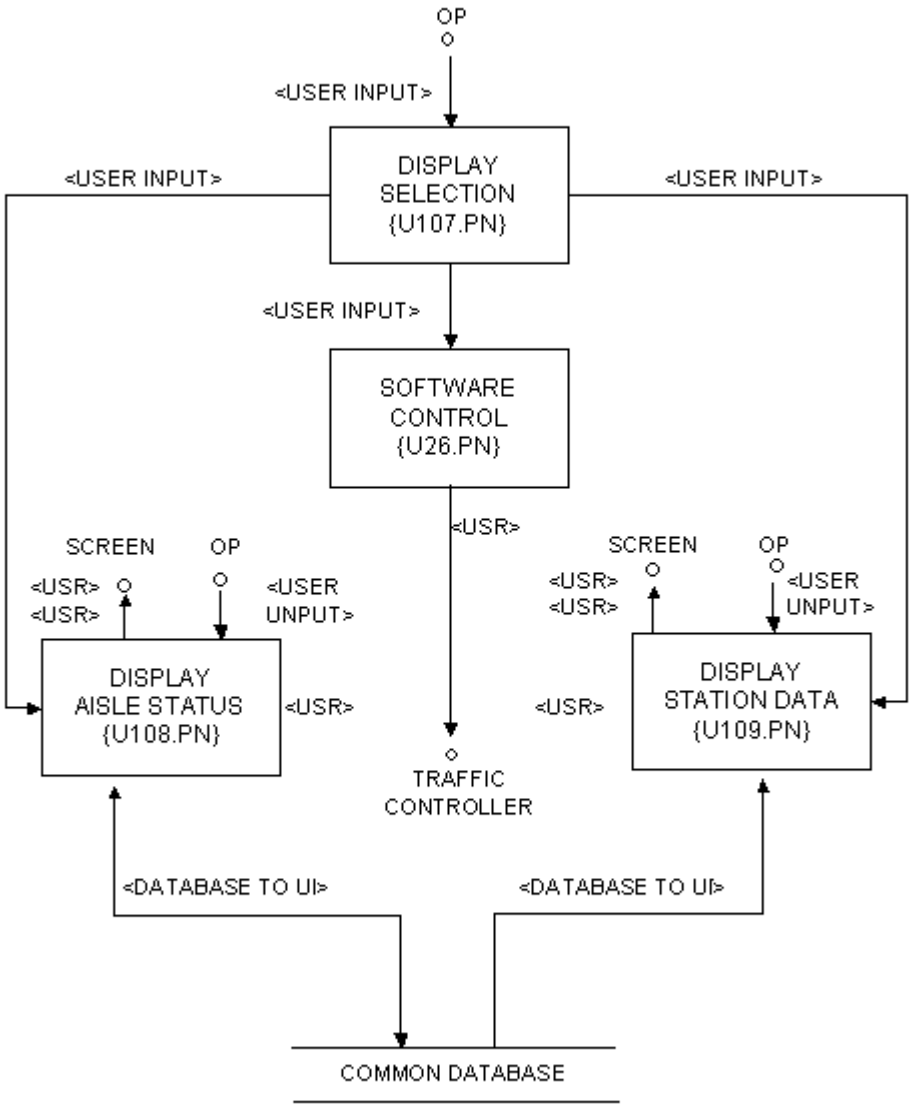

Process ID #	Date
U10.DFD -ASRS Page 3 of 4	August 18, 2000

Requirement ID #(s)

SECS-RC2.1, SECS-RC2.2, SECS-RC2.3, SECS-RC2.4, SECS-RC2.5, SECS-RC2.6, SECS-RC2.7, SECS-RC2.8, SECS-RC2.9, SECS-RC2.10, SECS-RC2.11

Data Flow Diagram

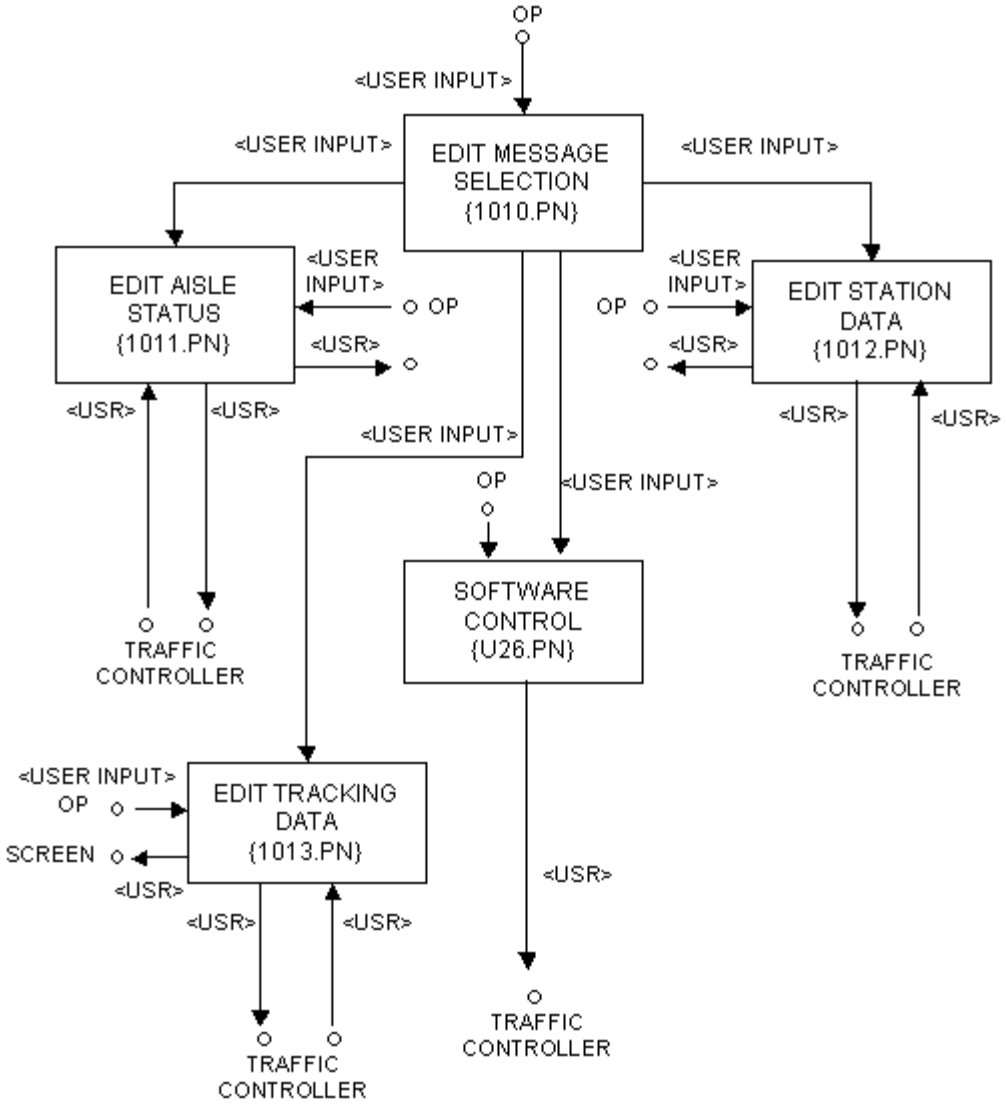

Process ID #	Date
U10.DFD -ASRS Page 4 of 4	August 18, 2000

Requirement ID #(s)

SECS-RC2.1, SECS-RC2.2, SECS-RC2.3, SECS-RC2.4, SECS-RC2.5, SECS-RC2.6, SECS-RC2.7, SECS-RC2.8, SECS-RC2.9, SECS-RC2.10, SECS-RC2.11

Data Flow Diagram

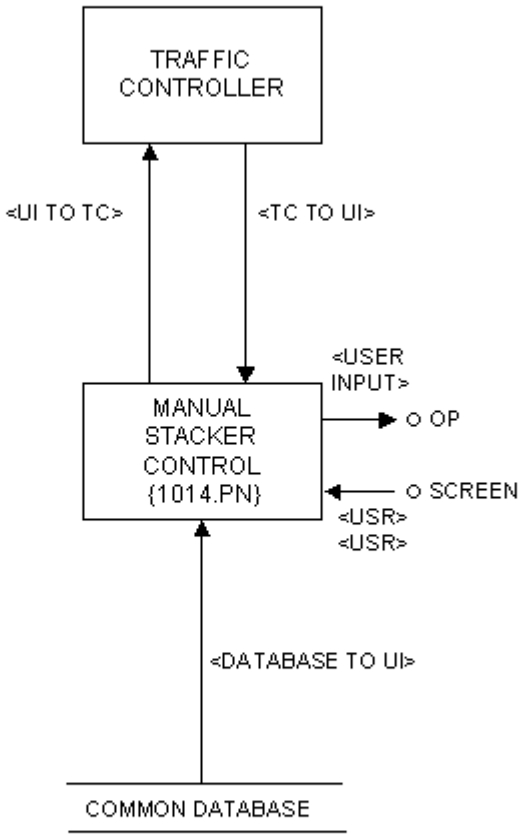

Figure 3.2.4.10-1 ASRS Menu

Overview

The ASRS Menu Dialog Boxes are used to manage the Tracy CSF (Consolidated Subsistence Facility) automatic retrieval system. Conveyor Messages Dialog Boxes are used to update the CSF's parameters used in distributing and routing of materials. Display Dialog Boxes are used to monitor the activity of the CSF. They display specific station data as well as aisle workload status. Edit Dialog Boxes are used to update the CSF's parameters used in distributing and routing materials.

Conveyor Messages	Notifies the CSF that a change is required in the current performance of movement for material on conveyor lanes.
Display	Displays aisle and station status.
Edit	Notifies the CSF that a change is required in the current status/data pertaining to material currently in process.
Manual Stacker Control	Notifies the CSF that a different type of performance is required in the stacker area.

3.2.4.10.1 U101.PN - ASRS Selection

Process Name	Process ID #	Date
ASRS Selection	U101.PN	August 18, 2000

Requirements ID #(s)

SECS-RC2.1, SECS-RC2.2, SECS-RC2.3, SECS-RC2.5, SECS-RC2.9, SECS-RC2.10, SECS-RI10

Process Narrative

Via an input from the user, the ASRS selection from the ECS bar menu produces dialog boxes containing the:

- Conveyor Selection Menu (U101.PN),
- Send Discrete Transaction (U102.PN),
- Send Move Request Message (U103.PN),
- Send Move Complete Message (U104.PN),
- Clear Container ID From PLC (U105.PN);
- And Change Conveyor Status (U106.PN)

3.2.4.10.2 U102.PN - Send Discrete Transaction

Process Name	Process ID #	Date
Send Discrete Transaction	U102.PN	August 18, 2000

Requirement ID #(s)
SECS-RC2.1, SECS-RC2.2, SECS-RC2.3, SECS-RC2.10, SECS-RI10, SECS-RC1.1.17

Process Narrative

This process will send a Stand Name (Designated Pickup/Deposit stand or workstation) and a Stand State (Indicates if a container is present or not present at a workstation). Load present (H) or Load not present (L).

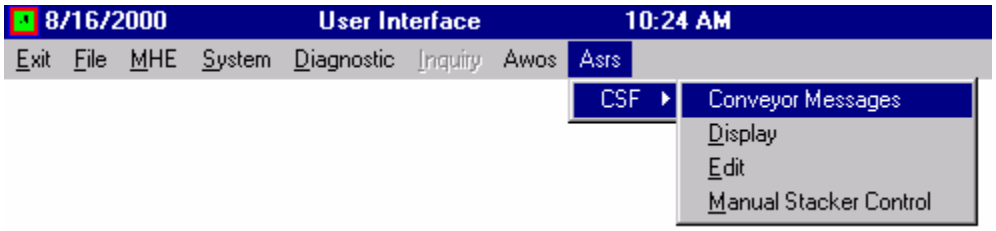

Figure 3.2.4.10.2-1 Conveyor Message Menu

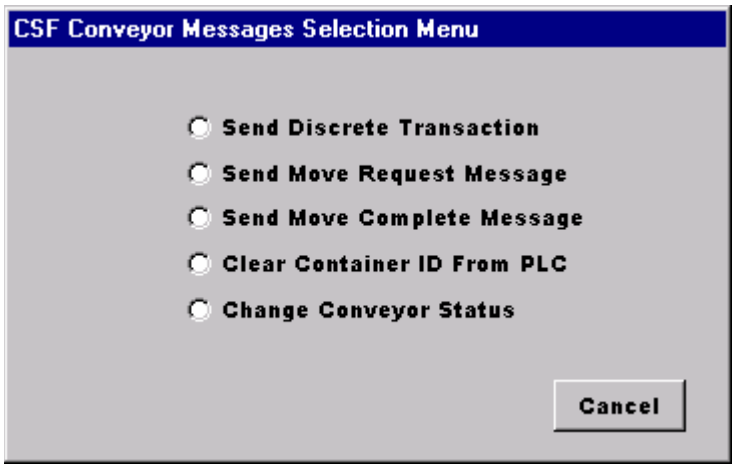

Figure 3.2.4.10.2-2 Send Discrete Transaction (Screen 1)

Figure 3.2.4.10.2-3 Send Discrete Transaction (Screen 2)

3.2.4.10.3 U103.PN - Send Move Request Message

Process Name	Process ID #	Date
Send Move Request Message	U103.PN	August 18, 2000

Requirement ID #(s)
SECS-RC2.1, SECS-RC2.2, SECS-RC2.3, SECS-RC2.10, SECS-RI10, SECS-RC1.1.17

Process Narrative

This process will move material from one P&D (Pickup/Deposit) stand to another via a Container ID (Bar code identification attached to a slave pallet) and a From Stand/To Stand entry.

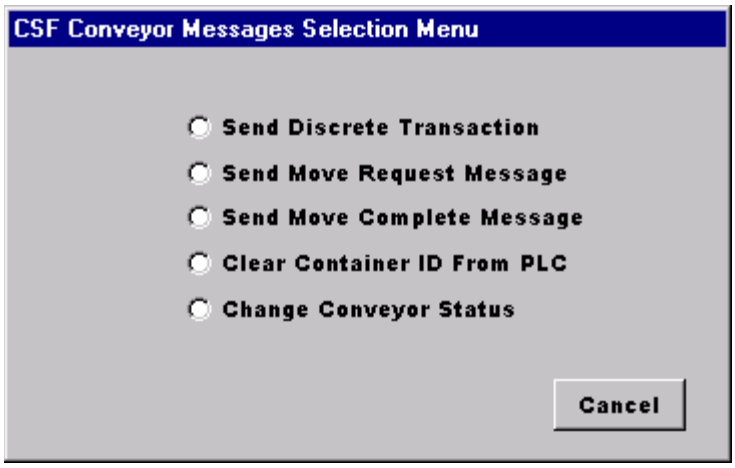

Figure 3.2.4.10.3-1 Send Move Request Message (Screen 1)

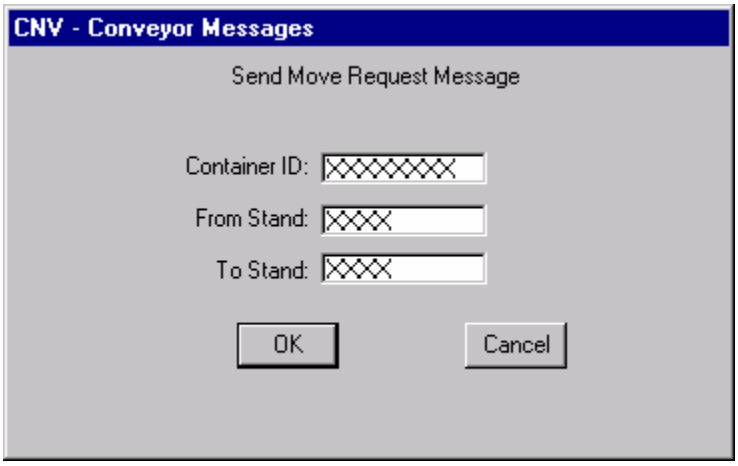

Figure 3.2.4.10.3-2 Send Move Request Message (Screen 2)

3.2.4.10.4 U104.PN - Send Move Complete Message

Process Name	Process ID #	Date
Send Move Complete Message	U104.PN	August 18, 2000

Requirement ID #(s)
SECS-RC2.1, SECS-RC2.2, SECS-RC2.3, SECS-RC2.10, SECS-RI10, SECS-RC1.1.17

Process Narrative

This process will send a move complete message to the Subcontroller via a Container ID (Bar code identification attached to a slave pallet) and a From Stand/To Stand entry.

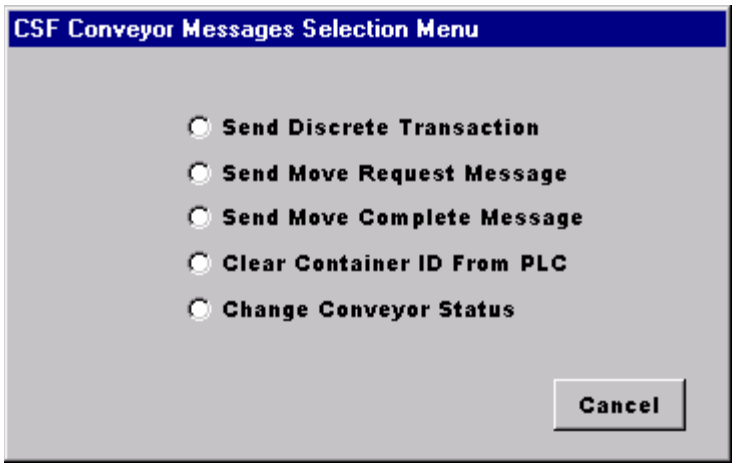

Figure 3.2.4.10.4-1 Send Move Complete Message (Screen 1)

Figure 3.2.4.10.4-2 Send Move Complete Message (Screen 2)

3.2.4.10.5 U105.PN - Clear Container ID From PLC

Process Name	Process ID #	Date
Clear Container ID From PLC	U105.PN	August 18, 2000

Requirement ID #(s)
SECS-RC2.1, SECS-RC2.2, SECS-RC2.3, SECS-RC2.10, SECS-RI10, SECS-RC1.1.17

Process Narrative

This process will send a message to the PLC to remove slave pallet identification via a Container ID (Bar code identification attached to a slave pallet) entry.

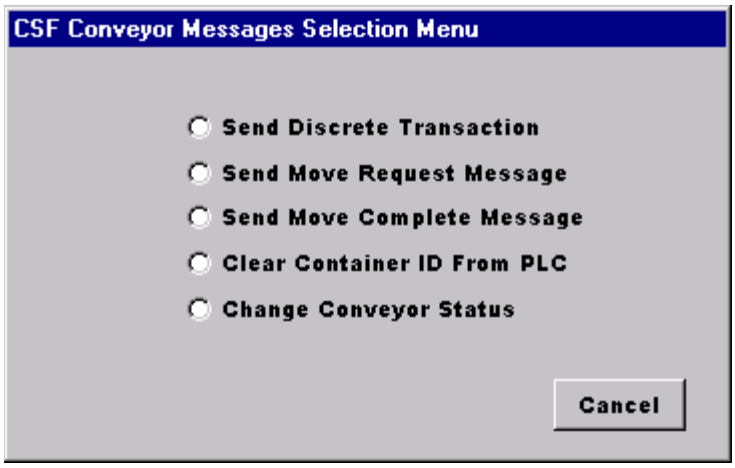

Figure 3.2.4.10.5-1 Clear Load ID From PLC (Screen 1)

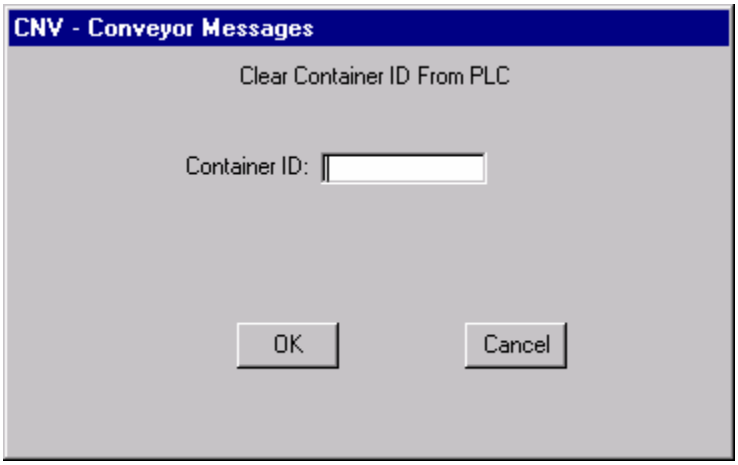

Figure 3.2.4.10.5-2 Clear Load ID From PLC (Screen 2)

3.2.4.10.6 U106.PN - Change Conveyor Status

Process Name	Process ID #	Date
Change Conveyor Status	U106.PN	August 18, 2000

Requirement ID #(s)
SECS-RC2.1, SECS-RC2.2, SECS-RC2.3, SECS-RC2.10, SECS-RI10, SECS-RC1.1.17

Process Narrative

This process sends a to the PLC via ("Y" Yes / "N" No) entry, to Enable (START) or Disable (STOP) movement of the conveyor system.

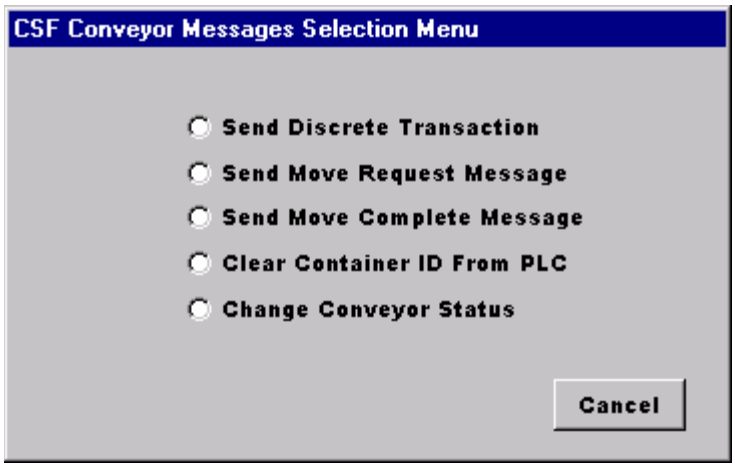

Figure 3.2.4.10.6-1 Change Conveyor Status (Screen 1)

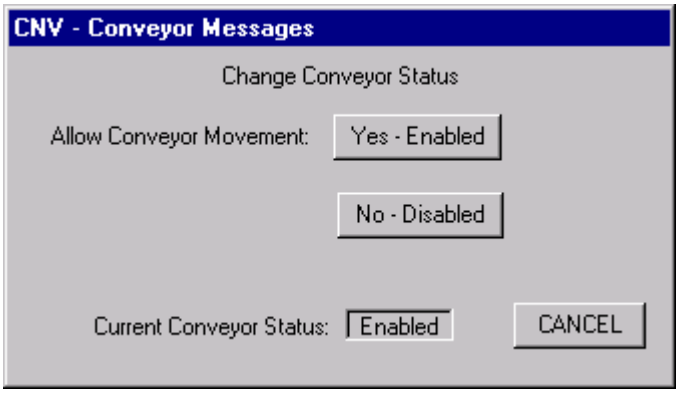

Figure 3.2.4.10.6-2 Change Conveyor Status (Screen 2)

3.2.4.10.7 U107.PN - ASRS Selection

Process Name	Process ID #	Date
ASRS Selection	U107.PN	August 18, 2000

Requirements ID #(s)

SECS-RC2.1, SECS-RC2.2, SECS-RC2.3, SECS-RC2.5, SECS-RC2.9, SECS-RC2.10, SECS-RI10

Process Narrative

Via an input from the user, the ASRS selection from the ECS bar menu produces dialog boxes containing the:

- Display Selection Menu (U107.PN),
- Display Aisle Status (U108.PN);
- And Display Station Data (U109.PN).

3.2.4.10.8 U108.PN - Display Aisle Status

Process Name	Process ID #	Date
Display Aisle Status	U108.PN	August 18, 2000

Requirement ID #(s)
SECS-RC2.1, SECS-RC2.2, SECS-RC2.3, SECS-RC2.10, SECS-RI10, SECS-RC1.1.17

Process Narrative

This process is used to display current information about the S/R (Storage/Retrieval) Machine aisles. Information is dynamically update every few seconds and can be displayed via a Refresh button. If an operational error occurs an error box provided at the bottom center of the screen will provide an error code reference table lookup number and a short error description for any S/RM 's currently in an error condition.

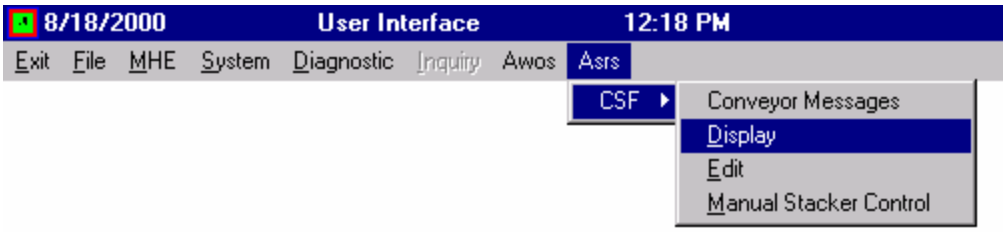

Figure 3.2.4.10.8-1 Display Message Menu

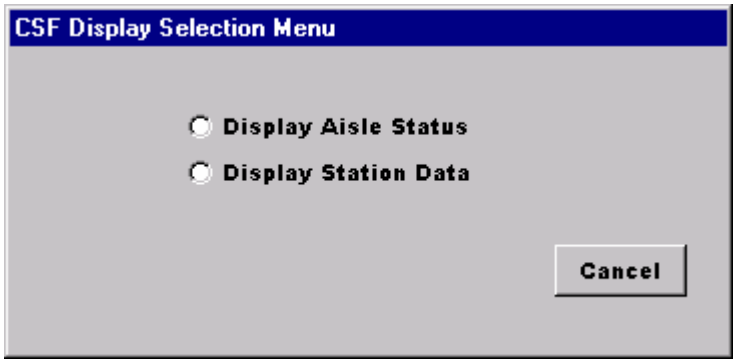

Figure 3.2.4.10.8-2 Display Aisle Status (Screen 1)

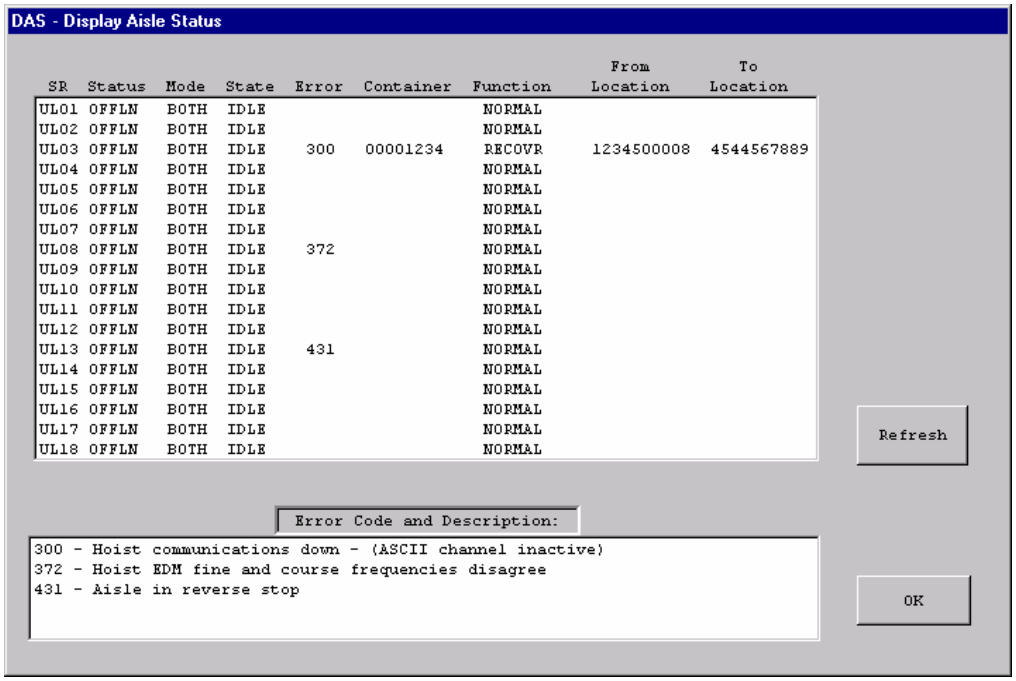

Figure 3.2.4.10.8-3 Display Aisle Status (Screen 2)

3.2.4.10.9 U109.PN - Display Station Data

Process Name	Process ID #	Date
Display Station Data	U109.PN	August 18, 2000

Requirement ID #(s)
SECS-RC2.1, SECS-RC2.2, SECS-RC2.3, SECS-RC2.10, SECS-RI10, SECS-RC1.1.17

Process Narrative

This process is used to display current information about the P&D (Pickup/Deposit) stations. The first screen the operator enters the name of the station that is to be displayed or leaves entry blank to display all the stations. Information is dynamically update every few seconds and can be displayed via a Refresh button.

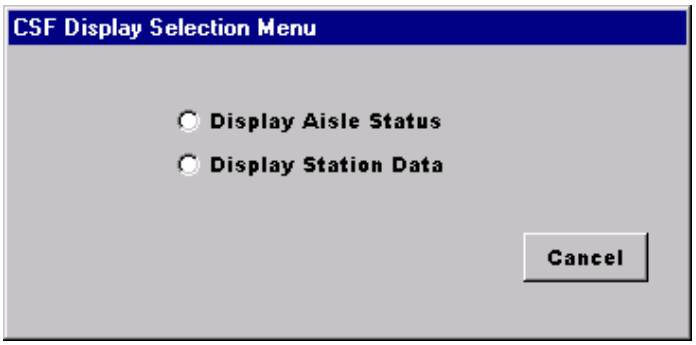

Figure 3.2.4.10.9-1 Display Station Data (Screen 1)

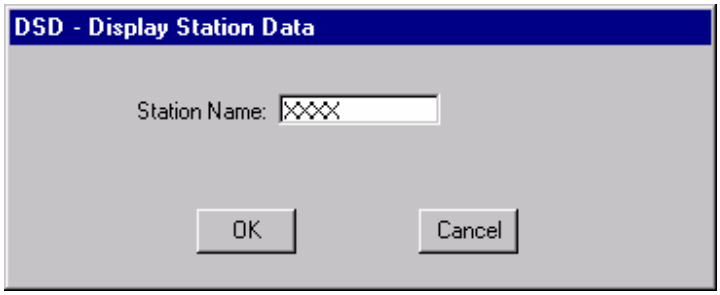

Figure 3.2.4.10.9-2 Display Station Data (Screen 2)

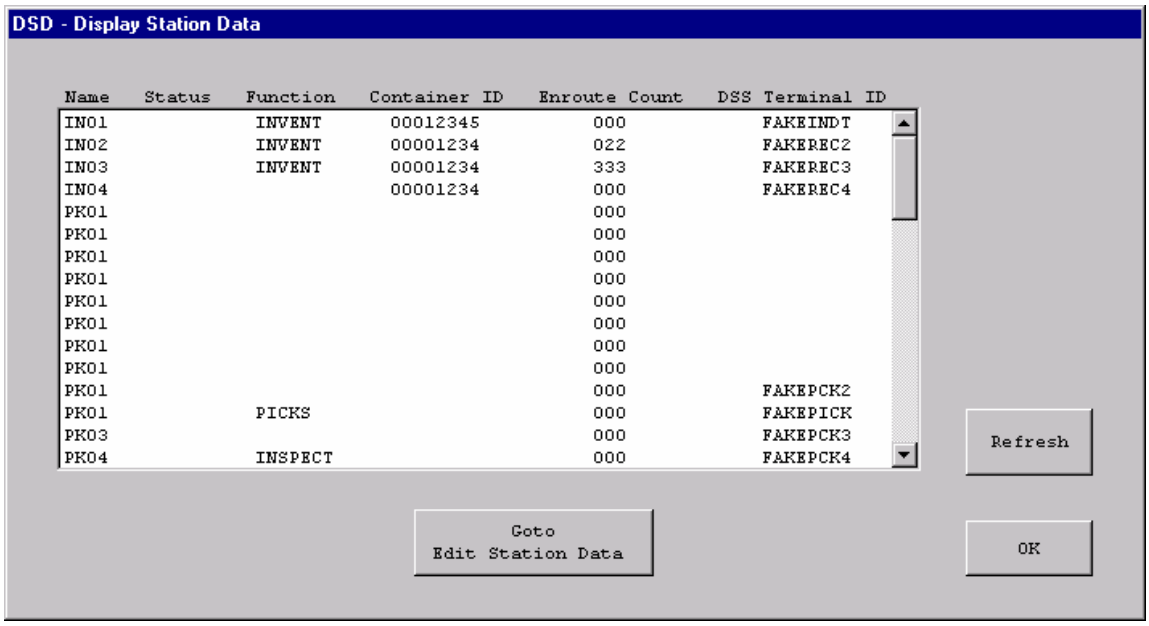

Figure 3.2.4.10.9-3 Display Station Data (Screen 3)

3.2.4.10.10 **U1010.PN - ASRS Selection**

Process Name	Process ID #	Date
ASRS Selection	U1010.PN	August 18, 2000

Requirements ID #(s)

SECS-RC2.1, SECS-RC2.2, SECS-RC2.3, SECS-RC2.5, SECS-RC2.9, SECS-RC2.10, SECS-RI10

Process Narrative

Via an input from the user, the ASRS selection from the ECS bar menu produces dialog boxes containing the:

- Edit Selection Menu (U1010.PN),
- Edit Aisle Status (U1011.PN),
- Edit Station Data (U1012.PN);
- And Edit Tracking Area (U1013.PN).

3.2.4.10.11 **U1011.PN - Edit Aisle Status**

Process Name	Process ID #	Date
Edit Aisle Status	U1011.PN	August 18, 2000

Requirement ID #(s)
SECS-RC2.1, SECS-RC2.2, SECS-RC2.3, SECS-RC2.10, SECS-RI10, SECS-RC1.1.17

Process Narrative

This process is used to edit information about the S/R (Storage/Retrieval) Machine aisles. If an operational error occurs an error box provided at the bottom center of the screen will provide an error code reference table lookup number and a short error description for any S/RM 's currently in an error condition. A Delete Stacker Transaction button is provided to allow an operator to delete an outstanding transaction for an S/RM currently selected.

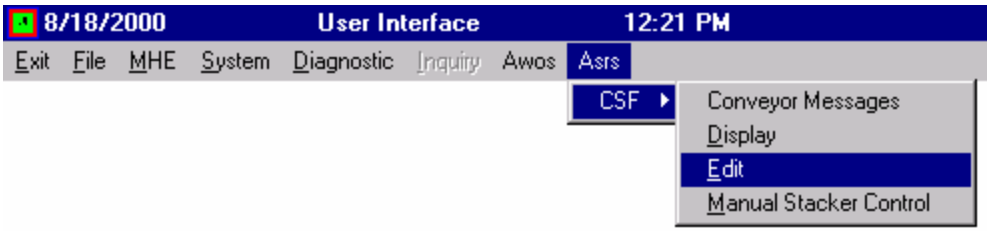

Figure 3.2.4.10.11-1 Edit Message Menu

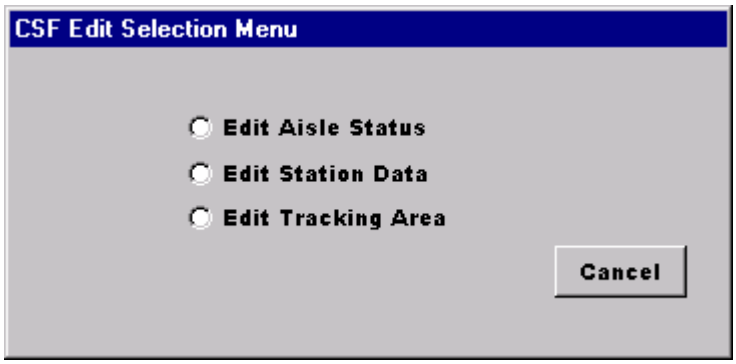

Figure 3.2.4.10.11-2 Edit Aisle Status (Screen 1)

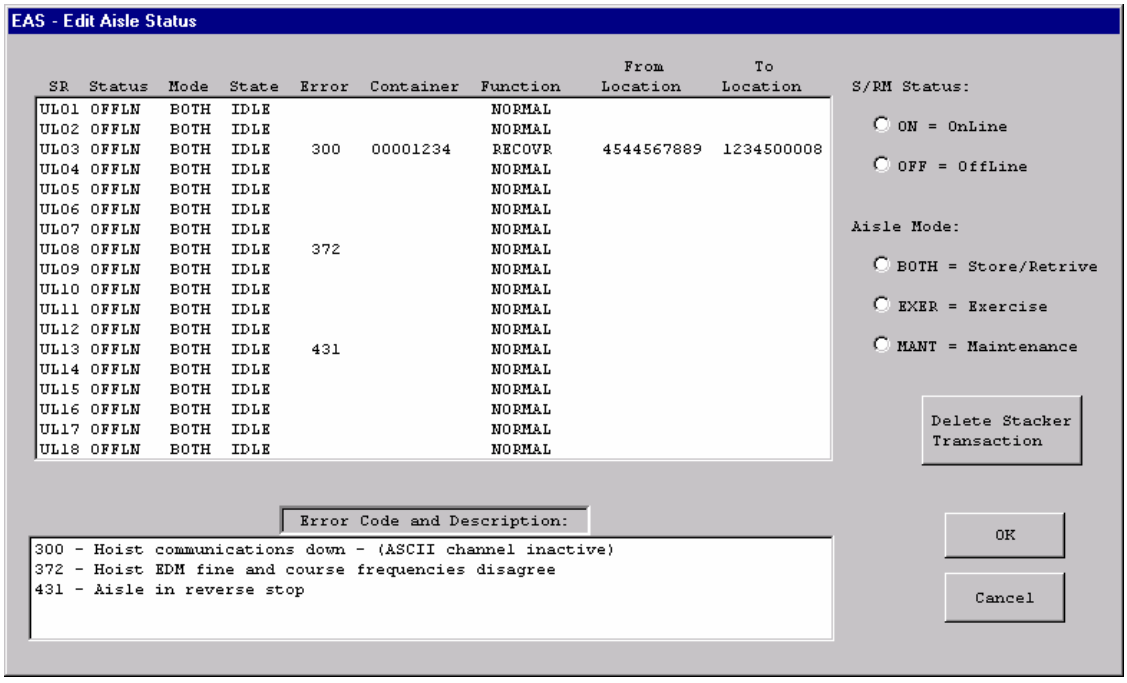

Figure 3.2.4.10.11-3 Edit Aisle Status (Screen 2)

U1011.PN - Edit Aisle Status - continued

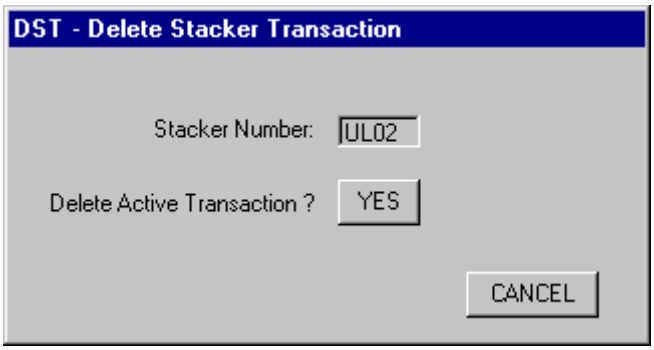

Figure 3.2.4.10.11-4 Edit Aisle Status - ((Delete Active Transaction) (Screen 3))

3.2.4.10.12 **U1012.PN - Edit Station Data**

Process Name	Process ID #	Date
Edit Station Data	U1012.PN	August 18, 2000

Requirement ID #(s)
SECS-RC2.1, SECS-RC2.2, SECS-RC2.3, SECS-RC2.10, SECS-RI10, SECS-RC1.1.17

Process Narrative

This process is used to edit current information about the P&D (Pickup/Deposit) stations. The operator enters the name of the station that is to be edited and the pertinent data fields are made available for input.

U1012.PN - Edit Station Data - continued

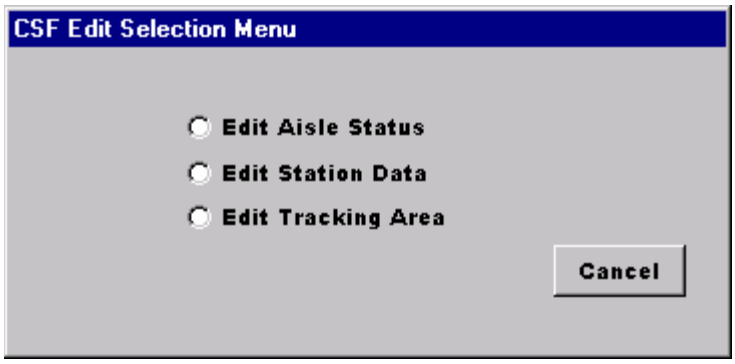

Figure 3.2.4.10.12-1 Edit Station Data (Screen 1)

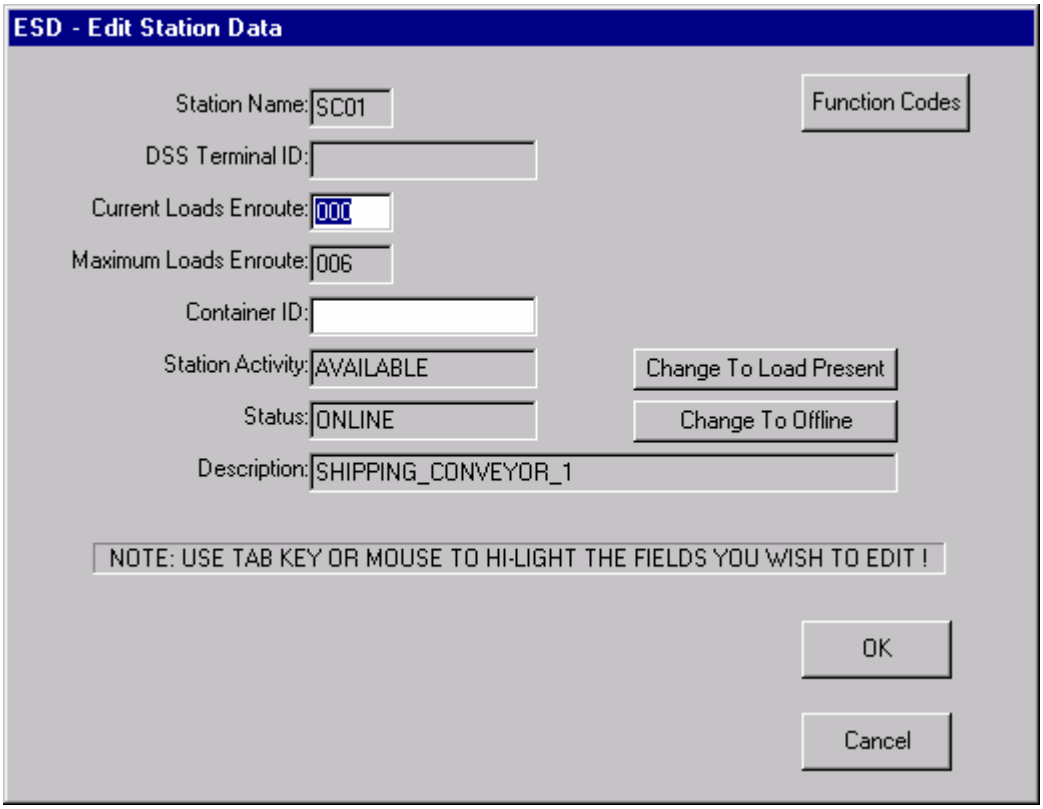

Figure 3.2.4.10.12-2 Edit Station Data (Screen 2)

3.2.4.10.13 U1013.PN - Edit Tracking Area

Process Name	Process ID #	Date
Edit Tracking Area	U1013.PN	August 18, 2000

Requirement ID #(s)
SECS-RC2.1, SECS-RC2.2, SECS-RC2.3, SECS-RC2.10, SECS-RI10, SECS-RC1.1.17

Process Narrative

This process allows the operator to modify the status of an area and change tracking ID 's on the conveyor. The operator selects an area from screen 2 by pressing the appropriate button. The third screen allows the operator add, move, delete and change container ID's and movements as appropriate. Enable/Disable allows an operator to start and stop conveyor movement. Refresh updates the container ID'S and destinations. **Note:** In order to make changes to the tracking information the area must be disabled.

U1013.PN - Edit Tracking Area - continued

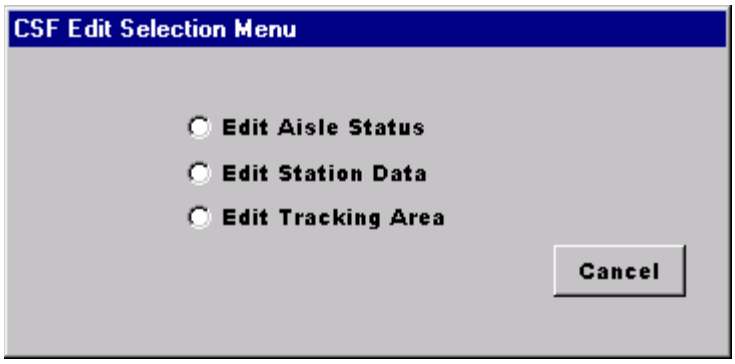

Figure 3.2.4.10.13-1 Edit Tracking Area (Screen 1)

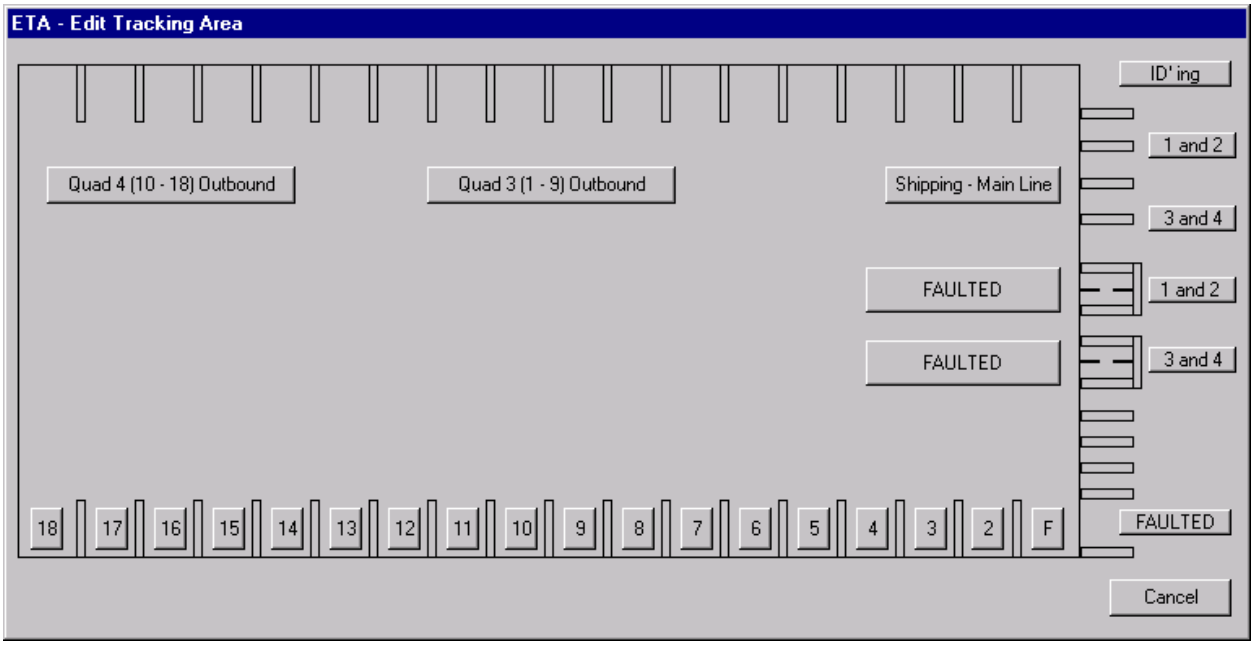

Figure 3.2.4.10.13-2 Edit Tracking Area (Screen 2)

U1013.PN - Edit Tracking Area - continued

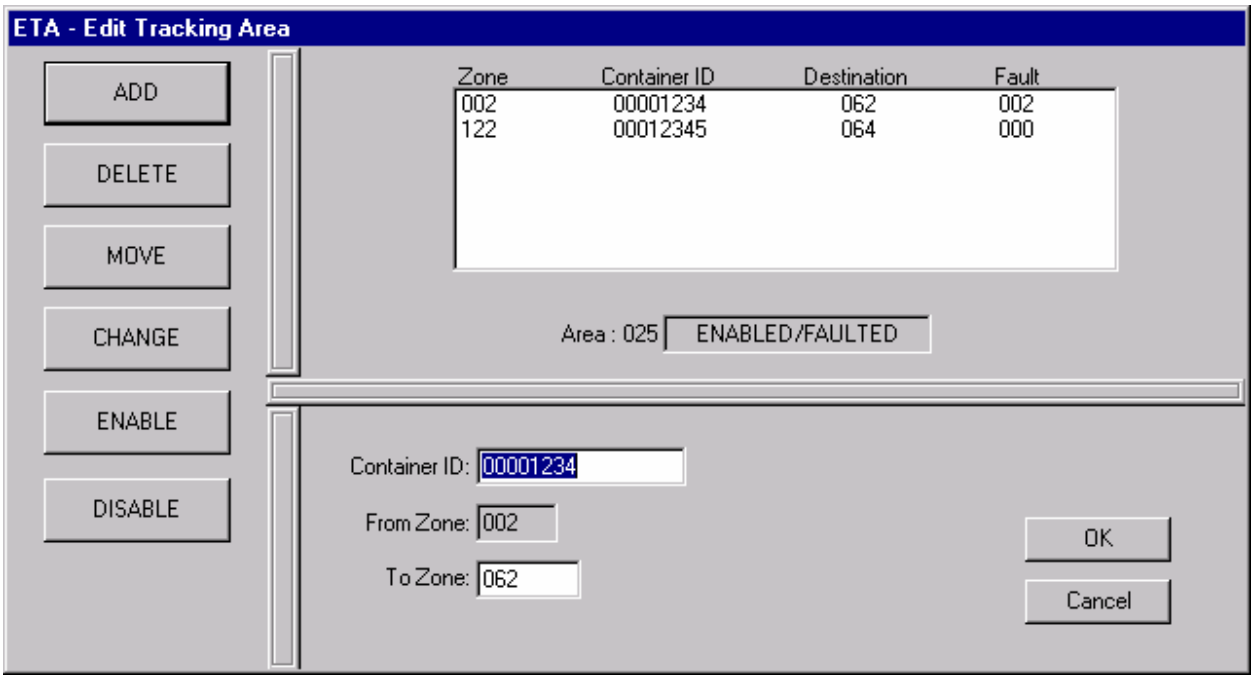

Figure 3.2.4.10.13-3 Edit Tracking Area (Screen 3)

3.2.4.10.14 **U1014.PN - Manual Stacker Control**

Process Name	Process ID #	Date
Manual Stacker Control	U1014.PN	August 18, 2000

Requirement ID #(s)
SECS-RC2.1, SECS-RC2.2, SECS-RC2.3, SECS-RC2.10, SECS-RI10, SECS-RC1.1.17

Process Narrative

This process allows the operator to direct the S/R (Storage/Retrieval) Machine in a semi - automatic mode. The operator selects the appropriate button to perform the desired action task.

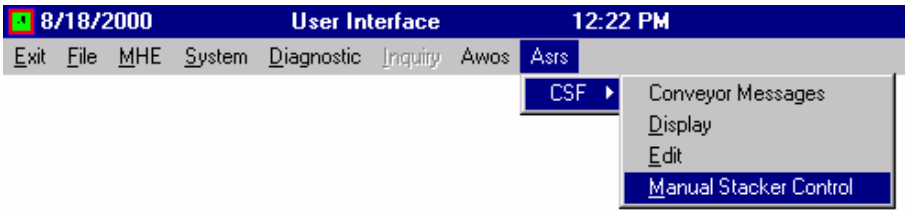

Figure 3.2.4.10.14-1 Manual Stacker Control Menu

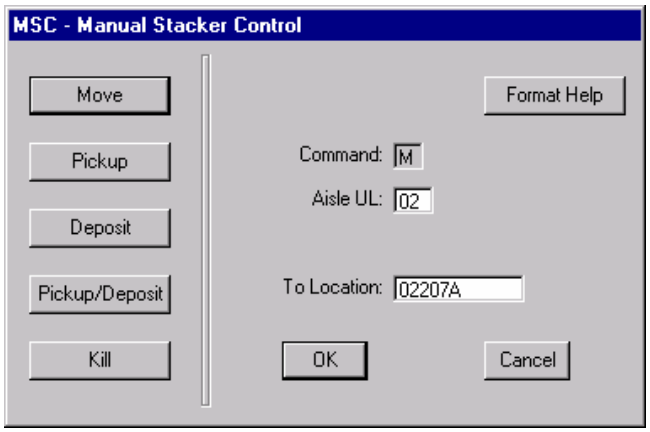

Figure 3.2.4.10.14-2 Manual Stacker Control (Screen 1)

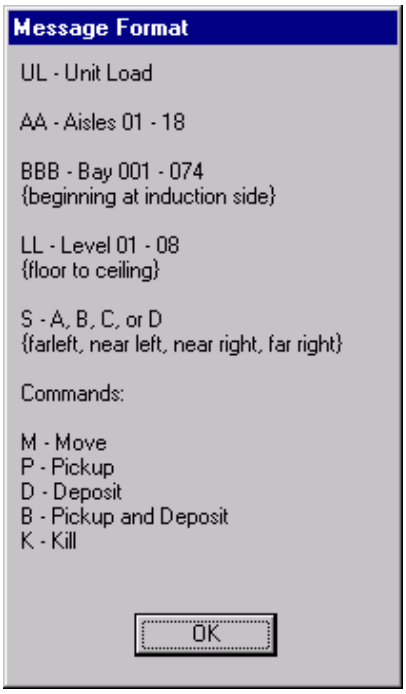

Figure 3.2.4.10.14-3 Manual Stacker Control (Format Help)

3.2.4.11 **U11.DFD**

Process ID #	Date
U11.DFD - Ministacker	September 18, 2002

Requirement ID #(s)

SECS-RC2.1, SECS-RC2.2, SECS-RC2.3, SECS-RC2.4, SECS-RC2.5, SECS-RC2.6, SECS-RC2.7, SECS-RC2.8, SECS-RC2.9, SECS-RC2.10, SECS-RC2.11

Data Flow Diagram

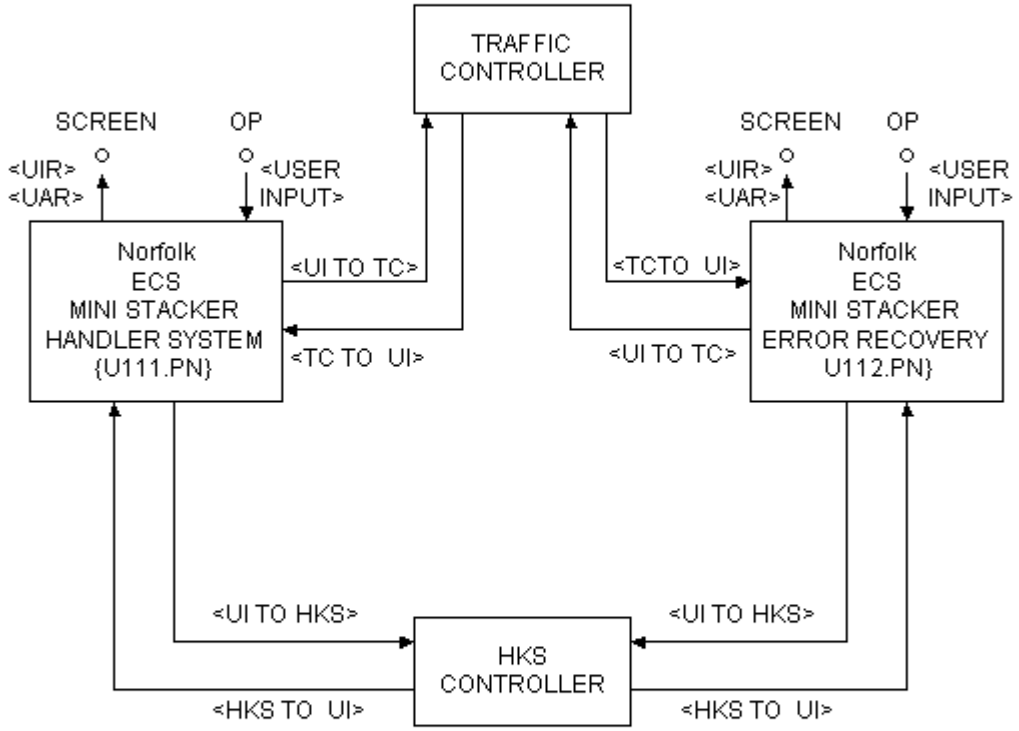

3.2.4.11.1 U111.PN - Ministacker Handler System

Process Name	Process ID #	Date
Ministacker Handler System	U111.PN	September 18, 2002

Requirement ID #(s)
SECS-RC2.1, SECS-RC2.2, SECS-RC2.3, SECS-RC2.10, SECS-RI10, SECS-RC1.1.17

Process Narrative

This process is used to provide an operator the ability to pull or store trays while in either REMOTE or LOCAL modes. The current mode is displayed in the status box at the top of the dialog box. A push bar is provided to change modes. Two push buttons are provided to perform the desired tray operations. A CANCEL button is provided to end the current pull or store operations. The user may pull or store as many trays as required until the CANCEL button is pushed. The OK button is provided for keyboard operation and emulates the ENTER key on the keyboard. The user has the ability to tab between all available items within the dialog box. **Note:** Crane errors will automatically send the user to Error Recovery screen (Screen 2), which is described separately in this text.

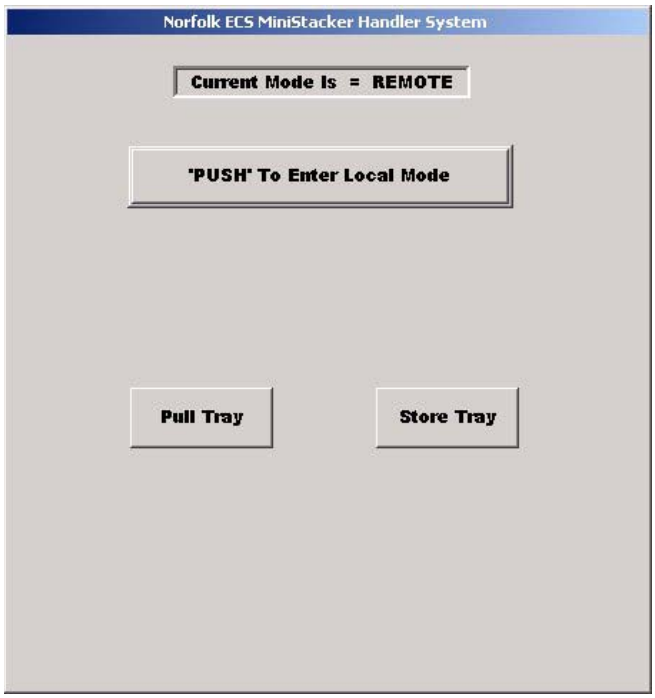

Figure 3.2.4.1-3.2.4.11-1 ECS Ministacker Handler System - Screen 1

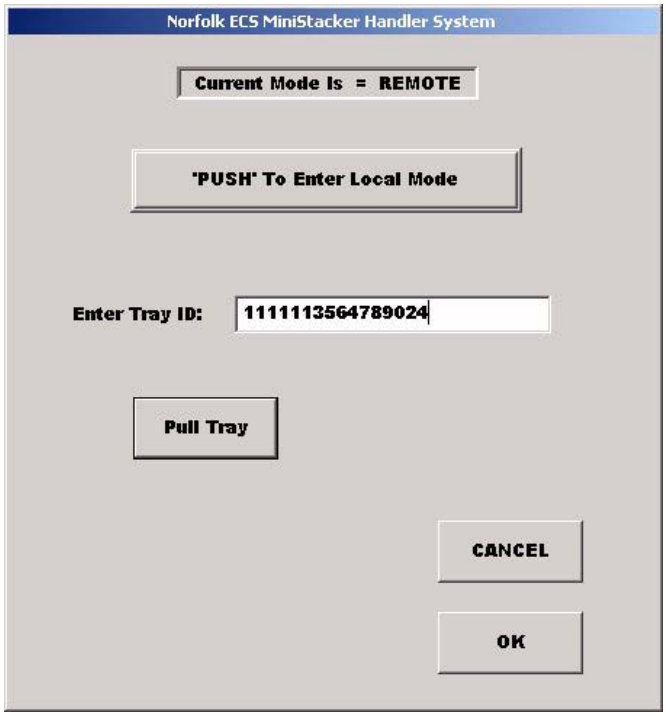

Figure 3.2.4.1-3.2.4.11-2 ECS Ministacker Handler System - Screen 1a

3.2.4.11.2 U112.PN - Ministacker Error Recovery

Process Name	Process ID #	Date
Ministacker Error Recovery	U112.PN	September 18, 2002

Requirement ID #(s)
SECS-RC2.1, SECS-RC2.2, SECS-RC2.3, SECS-RC2.10, SECS-RI10, SECS-RC1.1.17

Process Narrative

This process screen only appears in the event there is a crane error. The operator will receive a broadcast alert message box indicating a crane error has occurred and will be required to click the OK button or press the ENTER key to close the message box and continue to the Error Recovery Screen (Screen2).

In the Error Recovery Screen the operator answers questions displayed in the top status box by pressing the appropriate YES or NO button and provides tray information when required. When the procedure is completed the operator is returned to the primary screen, (Ministacker Handler System) screen 1.

3.2.4.11.3 U112.PN - Ministacker Error Recovery

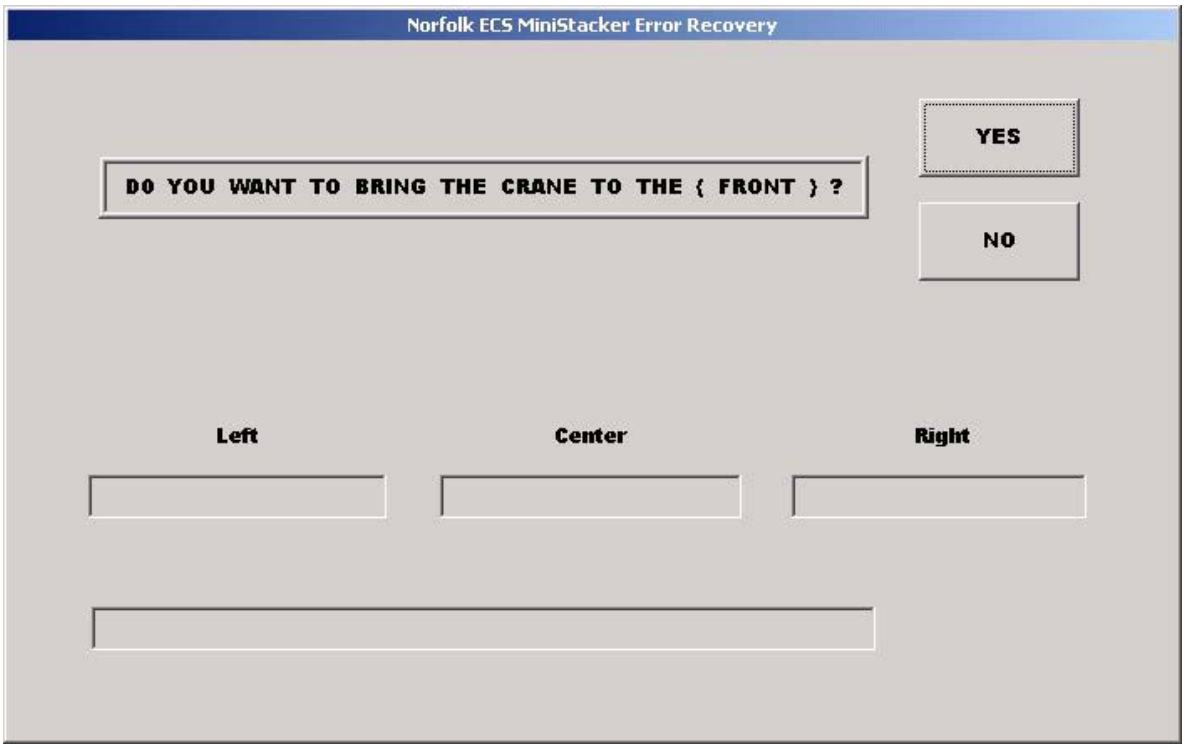

Figure 3.2.4.1-3 ECS Ministacker Handler System - Screen 2

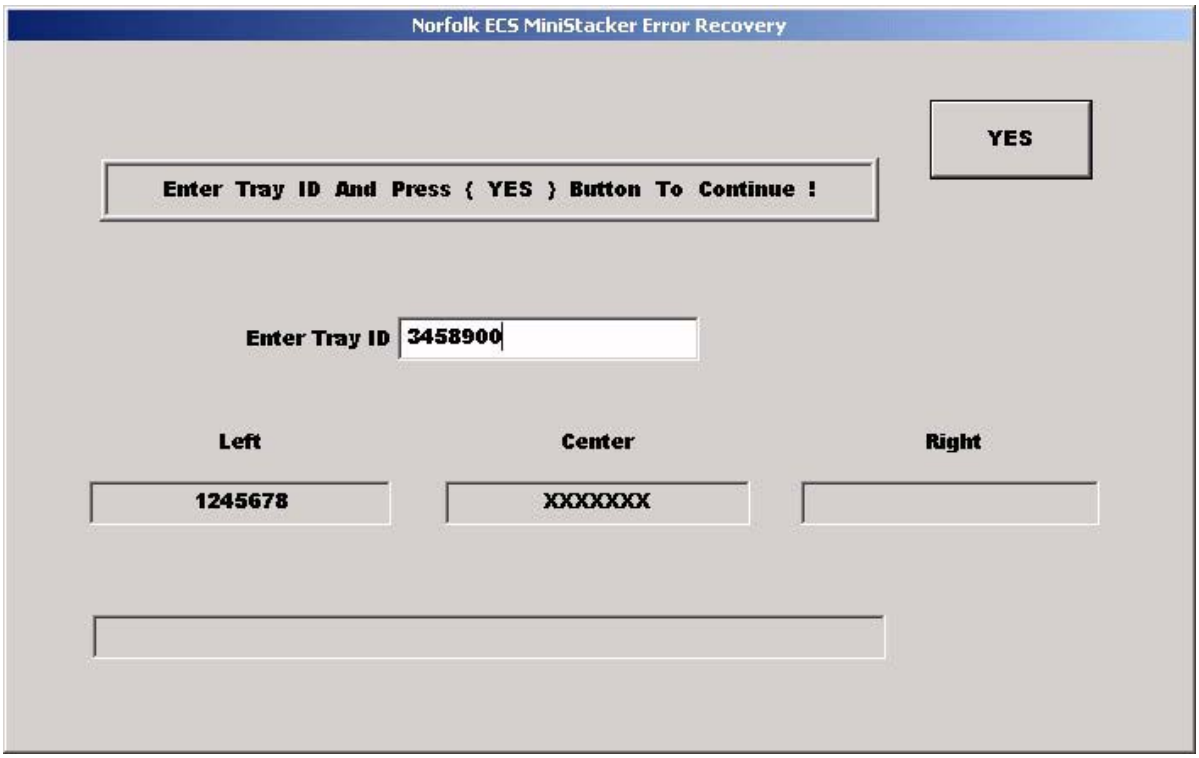

Figure 3.2.4.1-4 ECS Ministacker Handler System - Screen 2a

3.2.4.12 **U12.DFD**

Process Name	Date
U12.DFD - DDJC Sorter - Tracy Only Page 1 of 2	April 21, 2003

Requirement ID #(s)

SECS-RC2.1, SECS-RC2.2, SECS-RC2.3, SECS-RC2.10, SECS-RI10, SECS-RC1.1.17

Process Narrative

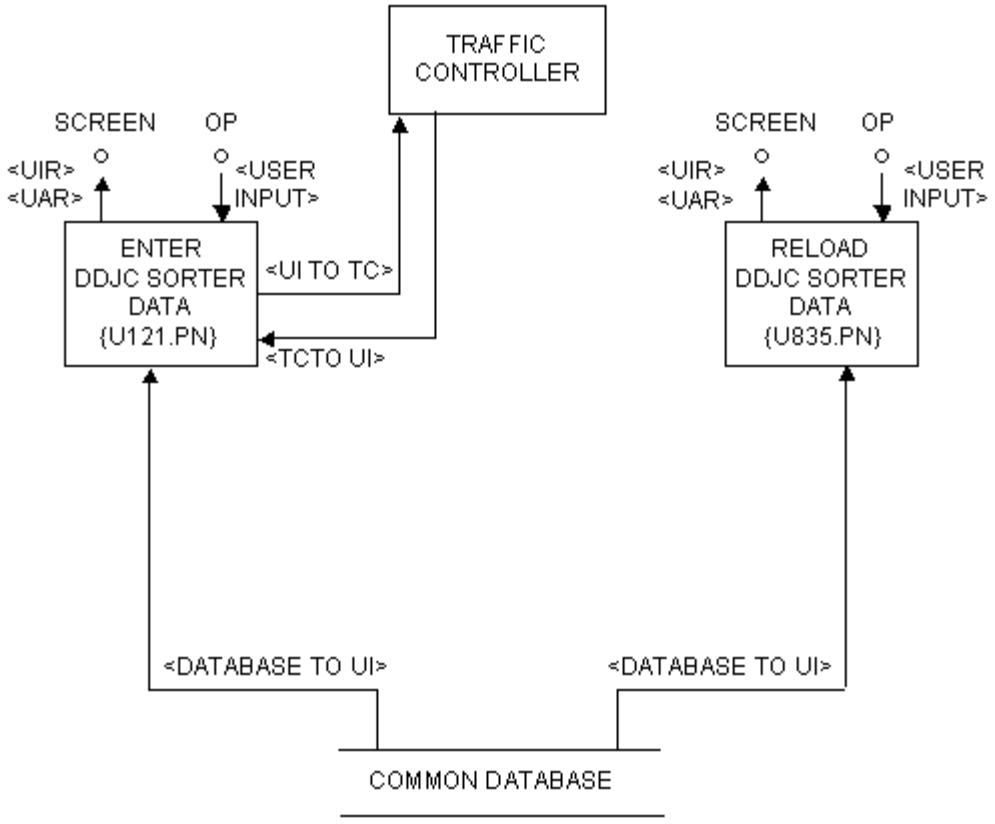

Process Name	Date
U12.DFD - DDJC Sorter - Tracy Only Page 2 of 2	April 21, 2003

Requirement ID #(s)

SECS-RC2.1, SECS-RC2.2, SECS-RC2.3, SECS-RC2.10, SECS-RI10, SECS-RC1.1.17

Process Narrative

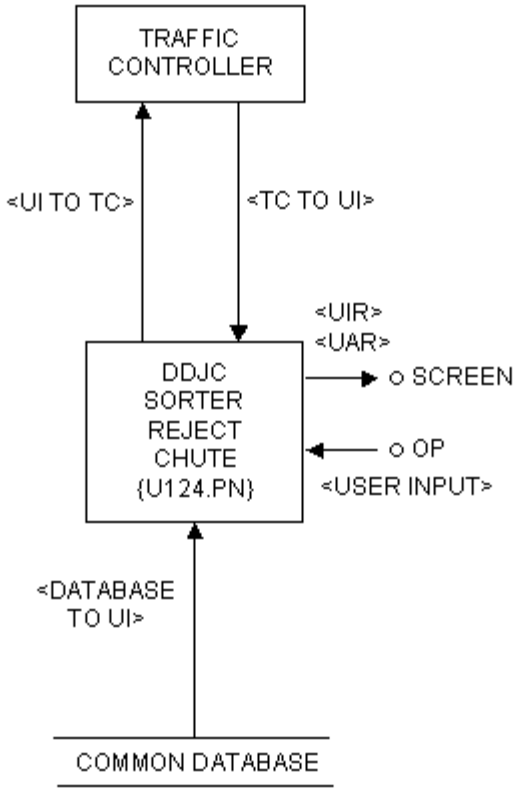

U12.DFD - Sortation Menu

Figure 3.2.4.11.3-1 Sortation Menu – Tracy Only

Overview

Sortation Dialog Boxes direct the delivery of conveyable material to sorter chutes, each of which is dedicated to a specific destination. There are two sorters, one that handles Mission, ISA and dedicated truck material, and one that handles CCP material.

The data entry conversations allow the user to assign a chute destination to an item that does not already have one assigned, and determine what action should be taken for a package that arrives at the CCP or Mission Sorter Reject Chute.

3.2.4.12.1 U121.PN - Enter Sorter Data

Process Name	Process ID #	Date
Enter Sorter Data – Tracy Only	U121.PN	April 21, 2003

Requirement ID #(s)
SECS-RC2.8, SECS-RC2.10, SECS-RC2.11

Process Narrative

This process is used to assign a chute destination to a barcoded item for which an assignment has not already been made (for instance, an item that arrives from an outlying warehouse). This process will prompt the user for the control number of the item to be inducted into the sorter, and the ID of the Pack Lane (sorter chute) to which the item is to be delivered. This process will then format and send a message (M01) to the CCP and Mission Sorter Subcontroller (AA.DFD) via the Traffic Subcontroller (T.DFD) to have the appropriate database records updated.

U121.PN - Enter Sort Data

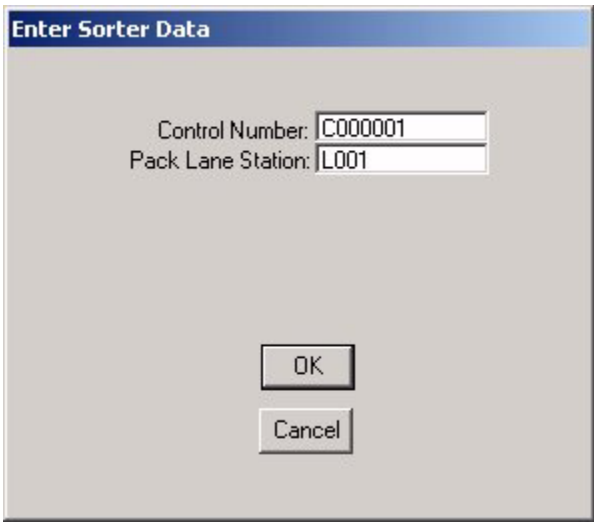

Figure 3.2.4.8.6.8-1 Enter Sort Data – Tracy Only

Description

Enter Sort Data is used to assign a chute destination to a barcoded item (pick or package) for which DSS has not already made the assignment (for instance, an item that arrives from an outlying warehouse).

3.2.4.12.2 U124.PN - Sorter Reject Chute

Process Name	Process ID #	Date
Sorter Reject Chute - Tracy Only	U124.PN	April 21, 2003

Requirement ID #(s)
SECS-RC2.2, SECS-RC2.11

Process Narrative

This process is used to display the sortation status of an item. This can be used solely as an inquiry process. This process will display information from the database which informs the user as to whether a package arrived at the correct sorter chute and, if not, the reason it did not arrive.

3.2.4.12.2.1 **U124.PN - Sorter Reject Chute**

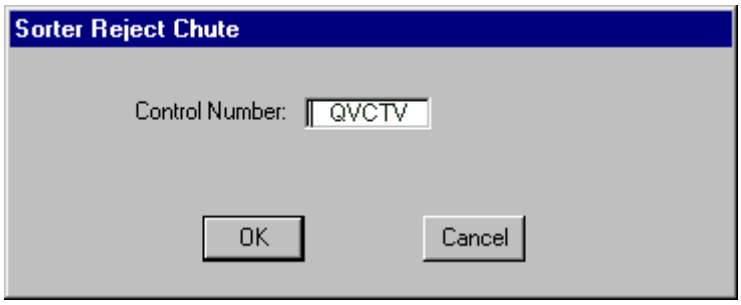

Figure 3.2.4.12.2.1-1 Sorter Reject Chute (Screen 1) –Tracy

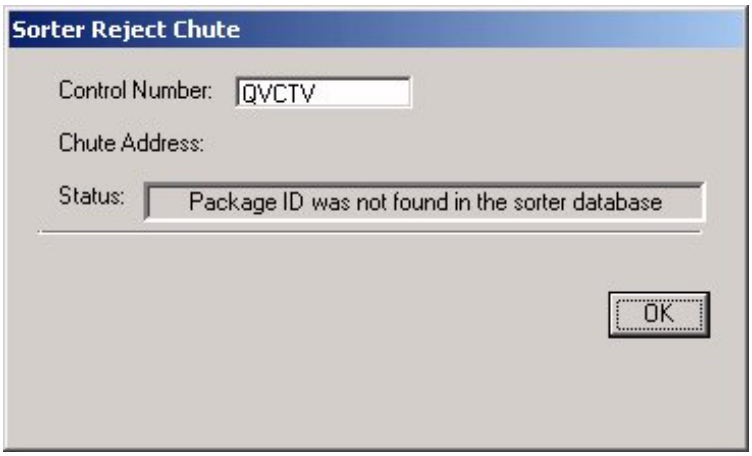

Figure 3.2.4.12.2.1-2 Sorter Reject Chute (Screen 2) – Tracy Only

3.2.4.12.3 U125.PN – Reload Sorter Data – Tracy Only

Process Name	Process ID #	Date
Reload Sorter Data - Tracy Only	U125.PN	April 21, 2003

Requirement ID #(s)
SECS-RC2.2, SECS-RC2.11

Process Narrative

This process is used to reload the sortation data from the database to the appropriate CCP or Mission Sorter Subcontroller.

3.2.4.12.3.1 **U125.PN – Reload Sorter Data – Tracy Only**

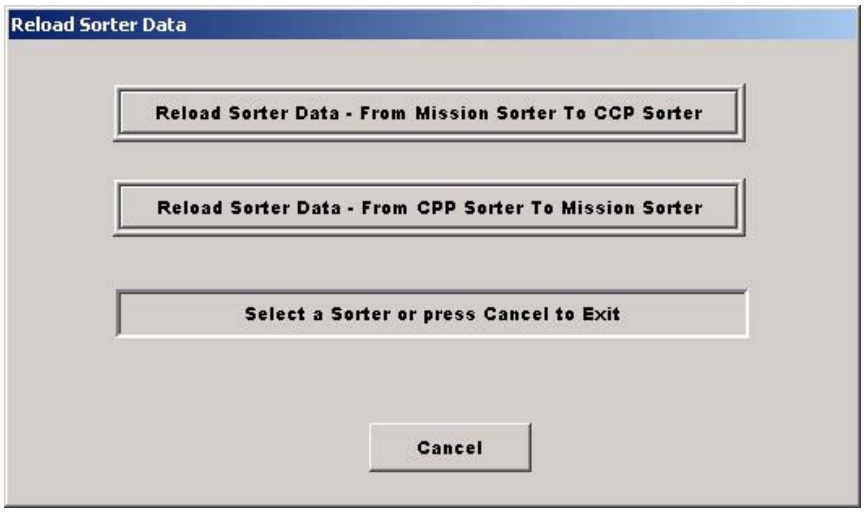

Figure 3.2.4.12.3.1-1 Reload Sorter Data – Tracy Only

3.2.5 **C.DFD**

Process ID #	Date
C.DFD	October 20, 1995

Requirement ID #(s)

SECS-RC1, SECS-RC1.1.7, SECS-RC1.2, SECS-RC1.3, SECS-RC1.4, SECS-RC3, SECS-RC3.1, SECS-RC3.2, SECS-RC3.3, SECS-RC4, SECS-RC4.2, SECS-RC4.3, SECS-RC5, SECS-RI1, SECS-RI5

Data Flow Diagram

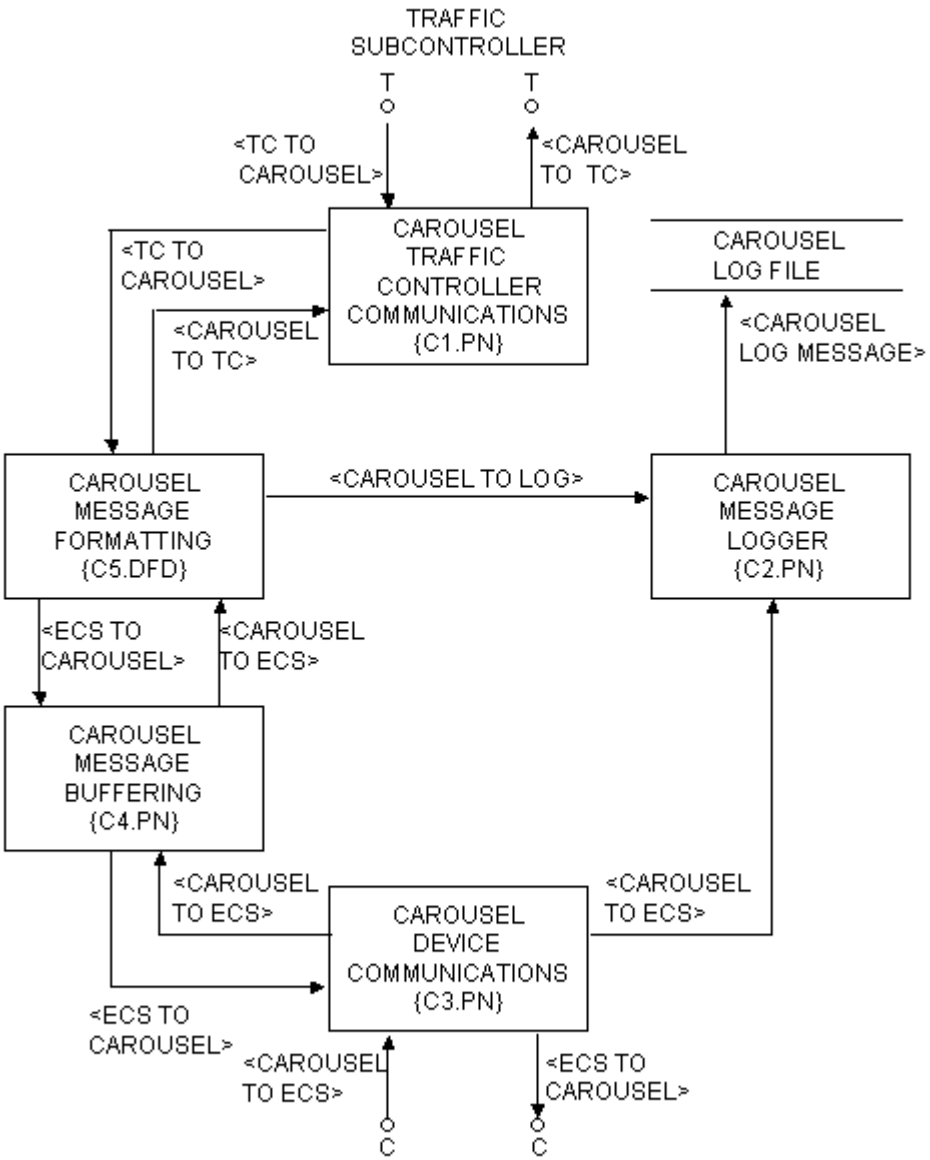

3.2.5.1 C1.PN - Carousel Traffic Controller Communications

Process Name	Process ID #	Date
Carousel Traffic Controller Communications	C1.PN	October 20, 1995

Requirements ID #(s)

SECS-RC1, SECS-RC1.1.7, SECS-RC1.2, SECS-RC1.3, SECS-RC1.4, SECS-RC5, SECS-RI1.0, SECS-RC3, SECS-RC3.2, SECS-RC3.3

Process Narrative

This process receives messages from the Traffic Controller (T.DFD) and passes them onto the Carousel Message Formatting and Scheduling Process. This process receives response and status messages from the Carousel Message Formatting and Scheduling Process and sends them to the Traffic Controller (T.DFD). This process handles all message transfer protocols and handshaking between the Traffic Controller (T.DFD) and the subcontroller (C.DFD). This process handles message transmission from memory or hardware.

3.2.5.2 C2.PN - Carousel Message Logger

Process Name	Process ID #	Date
Carousel Message Logger	C2.PN	October 20, 1995
Requirements ID #(s)		
SECS-RC4, SECS-RC4.3		

Process Narrative

This process receives messages from the Carousel Message Formatting and Scheduling Process and the Carousel Device Communications Process and if logging is enabled logs the message to the Carousel Log File.

3.2.5.3 C3.PN - Carousel Device Communications

Process Name	Process ID #	Date
Carousel Device Communications	C3.PN	October 20, 1995

Requirements ID #(s)

SECS-RI5, SECS-RC3, SECS-RC3.1, SECS-RC1, SECS-RC1.1.7, SECS-RC1.2, SECS-RC1.3, SECS-RC1.4, SECS-RC5

Process Narrative

This process receives messages from the Carousel Message Buffer Process and transmits them to the Carousel Controllers. This process receives acknowledgement and status responses from the Carousel Controllers and forwards them to the Carousel Message Buffer Process for further processing. This process sends device messages to the Carousel Message Logger Process for logging. This process handles all transfer protocols and handshaking required by the device communications.

3.2.5.4 C4.PN - Carousel Message Buffering

Process Name	Process ID #	Date
Carousel Message Buffering	C4.PN	October 20, 1995

Requirements ID #(s)
SECS-RC3, SECS-RC3.1, SECS-RC4, SECS-RC4.2

Process Narrative

This process will receive messages from the Carousel Message Formatting and Scheduling Process and the Carousel Device Communications Process and inserts and extracts the messages into and from their respective memory buffers.

3.2.5.5 C5.PN - Carousel Message Formatting and Scheduling

Process Name	Process ID #	Date
Carousel Message Formatting and Scheduling	C5.PN	October 20, 1995

Requirements ID #(s)

SECS-RI5, SECS-RC3, SECS-RC3.1, SECS-RC1, SECS-RC1.1.7, SECS-RC1.2, SECS-RC1.3, SECS-RC1.4, SECS-RC5

Process Narrative

This process receives messages from the Carousel Traffic Controller Communications Process and formats them for transmission to the Carousel Controllers. This process also handles scheduling of work out of the carousel aisles. Picks, puts, inventory, location surveys and COSIS work will be scheduled to keep a steady flow of work moving toward the storage workstations. This process sends formatted messages to the Carousel Message Logger Process for logging.

3.2.6 **S.DFD**

Process ID #	Date
S.DFD	October 20, 1995

Requirement ID #(s)

SECS-RC1, SECS-RC1.1.2, SECS-RC1.1.3, SECS-RC1.1.4, SECS-RC1.1.6, SECS-RC1.2, SECS-RC1.3, SECS-RC1.4, SECS-RC3, SECS-RC3.1, SECS-RC3.2, SECS-RC3.3, SECS-RC4, SECS-RC4.2, SECS-RC4.3, SECS-RC5, SECS-RI1, SECS-RI3, SECS-RI4, SECS-RI7, SECS-RI9

Data Flow Diagram

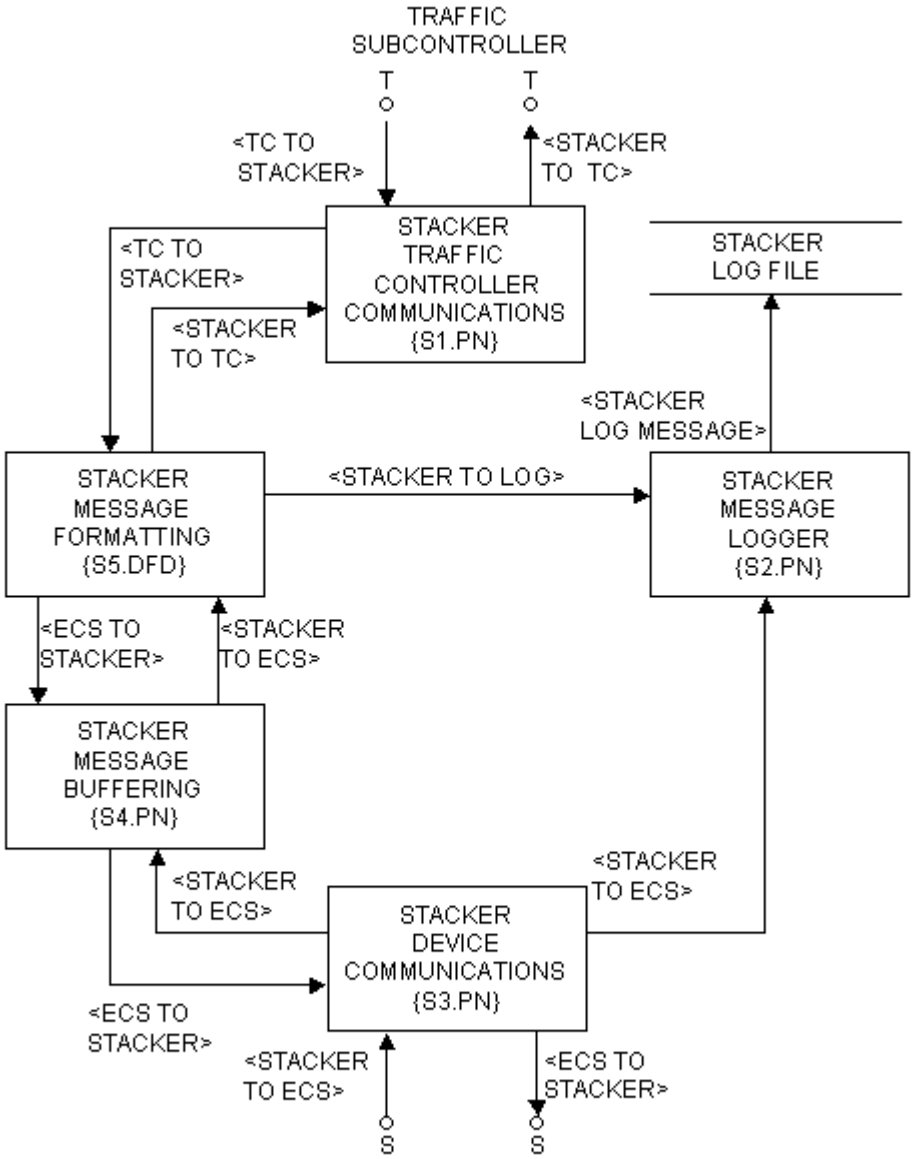

3.2.6.1 S1.PN - Stacker Traffic Controller Communications

Process Name	Process ID #	Date
Stacker Traffic Controller Communications	S1.PN	October 20, 1995

Requirements ID #(s)

SECS-RC1, SECS-RC1.1.2, SECS-RC1.1.3, SECS-RC1.1.4, SECS-RC1.1.6, SECS-RC1.2, SECS-RC1.3, SECS-RC1.4, SECS-RC5, SECS-RI1.0, SECS-RC3, SECS-RC3.2, SECS-RC3.3

Process Narrative

This process receives messages from the Traffic Controller (T.DFD) and passes them onto the Stacker Message Formatting and Scheduling Process. This process receives response and status messages from the Stacker Message Formatting and Scheduling Process and sends them to the Traffic Controller (T.DFD). This process handles all message transfer protocols and handshaking between the Traffic Controller (T.DFD) and the subcontroller (S.DFD). This process handles message transmission from memory or hardware.

3.2.6.2 S2.PN - Stacker Message Logger

Process Name	Process ID #	Date
Stacker Message Logger	S2.PN	October 20, 1995

Requirements ID #(s)
SECS-RC4, SECS-RC4.3

Process Narrative

This process receives messages from the Stacker Message Formatting and Scheduling Process and the Stacker Device Communications Process and if logging is enabled logs the message to the Stacker Log File.

3.2.6.3 S3.PN - Stacker Device Communications

Process Name	Process ID #	Date
Stacker Device Communications	S3.PN	October 20, 1995

Requirements ID #(s)

SECS-RI3, SECS-RI4, SECS-RI7, SECS-RI9, SECS-RC3, SECS-RC3.1, SECS-RC1, SECS-RC1.1.2, SECS-RC1.1.3, SECS-RC1.1.4, SECS-RC1.1.6, SECS-RC1.2, SECS-RC1.3, SECS-RC1.4, SECS-RC5

Process Narrative

This process receives messages from the Stacker Message Buffering Process and transmits them to the Air Force Stacker PLC, the Navy Stacker PLCs, STACKMAN PLC, or the NMC PC's depending upon the site. This process receives acknowledgement and status responses from the stacker devices and forwards them to the Stacker Message Buffering Process for further processing. This process sends device messages to the Stacker Message Logger Process for logging. This process handles all transfer protocols and handshaking required by the device communications.

3.2.6.4 S4.PN - Stacker Message Buffering

Process Name	Process ID #	Date
Stacker Message Buffering	S4.PN	October 20, 1995

Requirements ID #(s)
SECS-RC3, SECS-RC3.1, SECS-RC4, SECS-RC4.2

Process Narrative

This process will receive messages from the Stacker Message Formatting and Scheduling Process and the Stacker Device Communications Process and inserts and extracts the messages into and from their respective memory buffers.

3.2.6.5 **S5.DFD**

Process ID #	Date
S5.DFD - Stacker Message Formatting	November 11,2002

Requirement ID #(s)
SECS-RC1.1.6, SECS-RC3.1

Data Flow Diagram

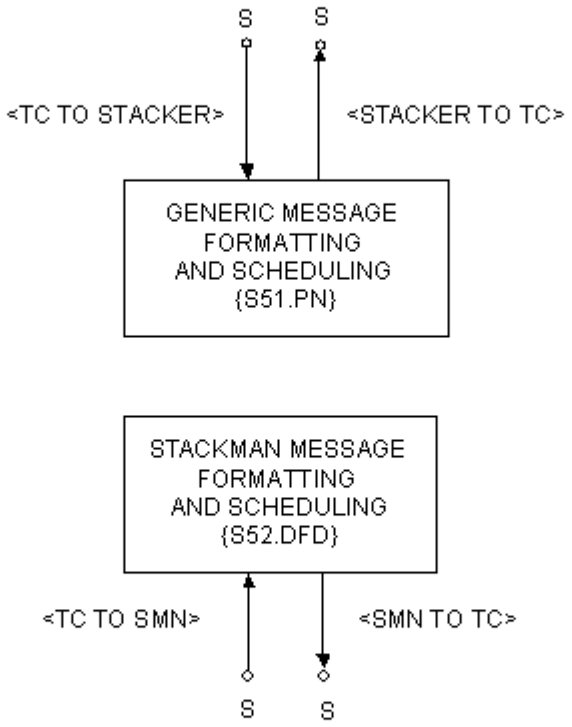

3.2.6.5.1 S51.PN - Generic Message Formatting and Scheduling

Process Name	Process ID #	Date
Stacker Message Formatting and Scheduling	S5.PN	October 20, 1995

Requirements ID #(s)

SECS-RI3, SECS-RI4, SECS-RI7, SECS-RI9, SECS-RC3, SECS-RC3.1, SECS-RC1, SECS-RC1.1.2, SECS-RC1.1.3, SECS-RC1.1.4, SECS-RC1.1.6, SECS-RC1.2, SECS-RC1.3, SECS-RC1.4, SECS-RC5

Process Narrative

This process receives messages from the Stacker Traffic Controller Communications Process and formats them for transmission to the Air Force Stacker PLC, the Navy Stacker PLCs, or the NMC PCs depending upon the site. This process also handles scheduling of work out of the stacker aisles. Picks, puts, inventory, location surveys and COSIS work will be scheduled to keep a steady flow of work moving toward the storage workstations. This process sends formatted messages to the Stacker Message Logger Process for logging. This process also receives messages from the Stacker Message Buffering Process and forwards them to the Stacker Traffic Controller Communications Process for transmission to the Traffic Controller (T.DFD).

3.2.6.5.2 **S52.DFD**

Process ID #	Date
S52.DFD - Stackman Message Formatting and Scheduling	November 11,2002
Requirement ID #(s)	
SECS-RC1.1.6, SECS-RC3.1	

Data Flow Diagram

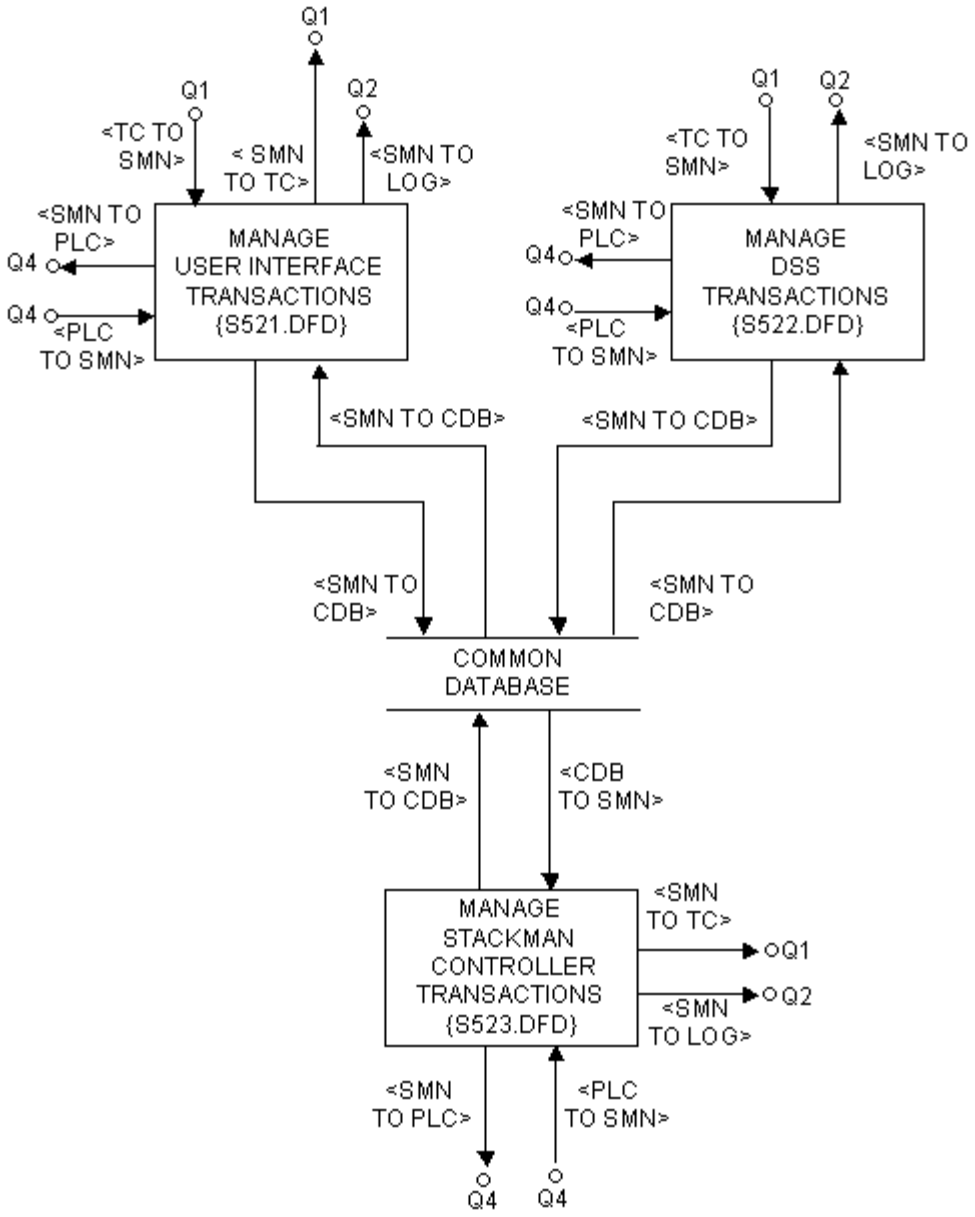

3.2.6.5.2.1 **S521.DFD**

Process Name	Date
S521.DFD - Manage User Interface Transactions	November 11,2002

Requirements ID #(s)
SECS-RC1.1.6, SECS-RC3.1

Data Flow Diagram

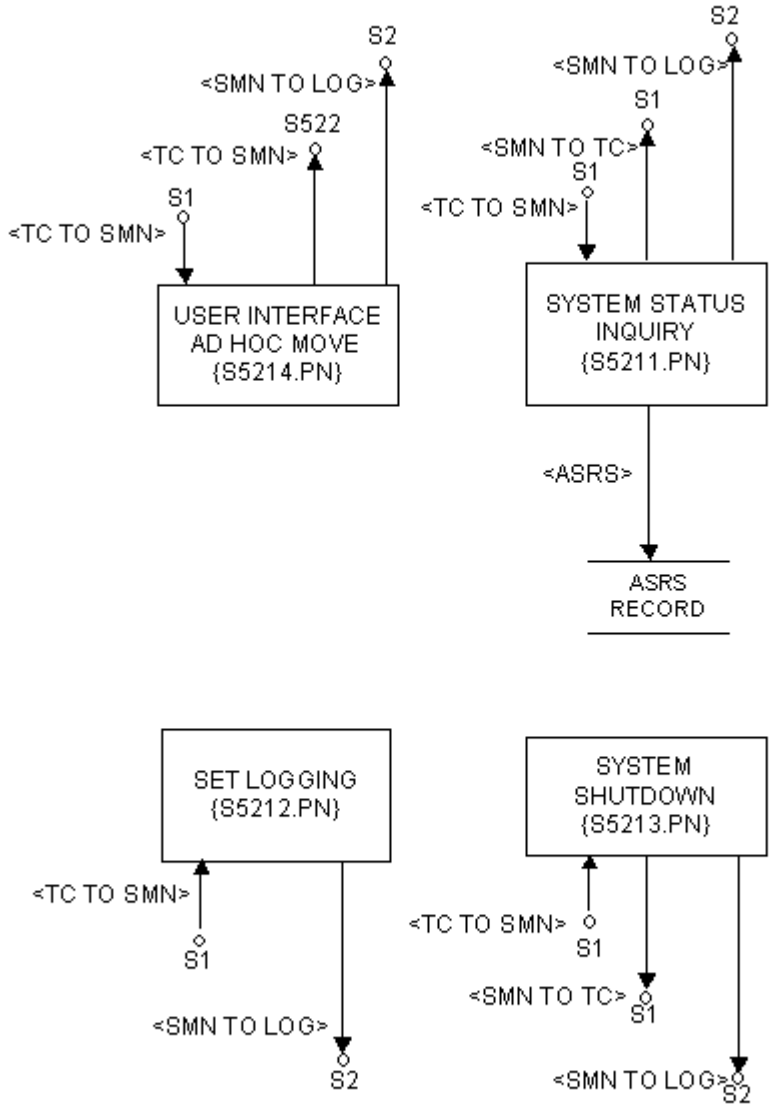

3.2.6.5.2.1.1 **S5211.PN - System Status Inquiry**

Process Name	Process ID #	Date
System Status Inquiry	S5211.PN	November 11, 2002
Requirements ID #(s)		
SECS-RC1.1.6, SECS-RC3.1		

Process Narrative

This process accepts a request to see a status display for Stackman equipment. This status display screen is a previously existing screen that is standard for ECS subcontrollers. This process will indicate if each crane, transfer car, and the conveyor system is online or offline.

3.2.6.5.2.1.2 **S5212.PN - Set Logging**

Process Name	Process ID #	Date
Set Logging	S5212.PN	November 11, 2002
Requirements ID #(s)		
SECS-RC1.1.6, SECS-RC3.1		

Process Narrative

This process accepts a User Interface request from the Stackman Traffic Controller Communications Process (S1.PN) to turn the UserLog.Post Process either on or off. Either UserLog.TurnOn or UserLog.TurnOff is called, depending on the input parameter. If invalid data was received, an error message is formatted and sent to the Stacker Traffic Controller Communications Process (S1.PN). This process sends formatted messages to the Stacker Message Logger Process (S2.PN) for possible logging.

3.2.6.5.2.1.3 **S5213.PN - System Shutdown**

Process Name	Process ID #	Date
System Shutdown	S5213.PN	November 11, 2002
Requirements ID #(s)		
SECS-RC1.1.6, SECS-RC3.1		

Process Narrative

This process accepts a User Interface request from the Stackman Traffic Controller Communications Process (S1.PN) to set a flag to shut down the Unit Controller, including the Link objects it uses. If invalid data was received, an error message is formatted and sent to the Stackman Traffic Controller Communications Process (S1.PN). This process sends formatted messages to the Stackman Message Logger Process (S2.PN) for possible logging.

3.2.6.5.2.1.4 **S5214.PN - User Interface Ad Hoc Move**

Process Name	Process ID #	Date
User Interface Ad Hoc Move	S5214.PN	November 11, 2002
Requirements ID #(s)		
SECS-RC1.1.6, SECS-RC3.1		

Process Narrative

This process processes Ad Hoc Moves from the User Interface. If invalid data was received, an error message is formatted and sent to the Stacker Traffic Controller Communications Process (S1.PN). If valid data was received this message is processed as an SMM (S522.DFD).

3.2.6.5.2.2 **S522.DFD**

Process ID #	Date
S522.DFD - Manage DSS Transactions	November 11, 2002
Requirement ID #(s)	
SECS-RC1.1.6, SECS-RC3.1	

Data Flow Diagram

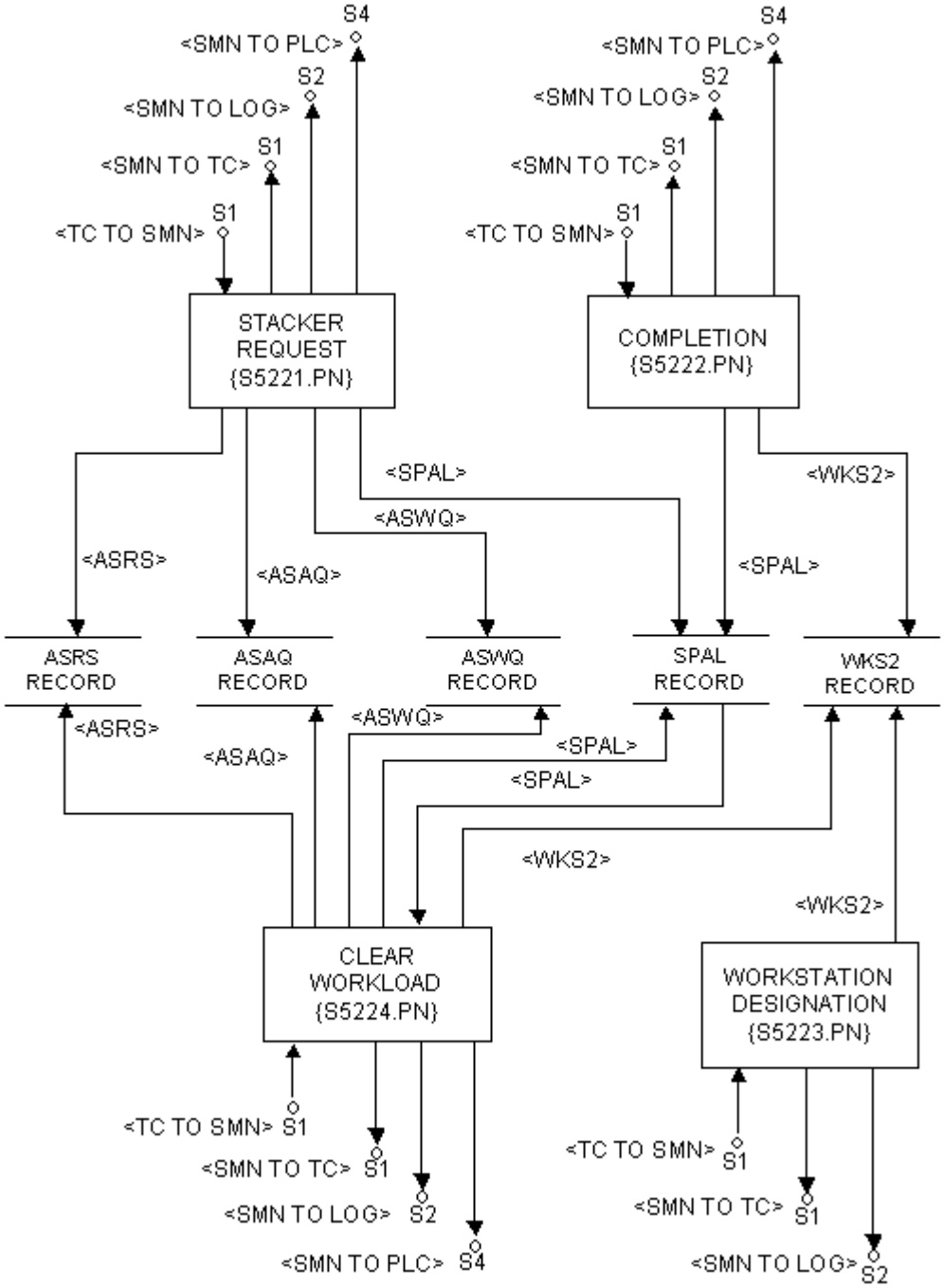

3.2.6.5.2.2.1 **S5221.PN - DSS Stacker Request**

Process Name	Process ID #	Date
DSS Stacker Request	S5221.PN	November 11, 2002

Requirements ID #(s)
SECS-RC1.1.6, SECS-RC3.1

Process Narrative

This process accepts an "R" flag Standard Movement Message (SMM) from the Stackman Traffic Controller Communications module (S1.PN), to move a pallet from a specified rack storage location and deliver it to a pick workstation (101-104). First, A slave pallet record (SPAL) is also created and initialized, if a record doesn't already exist.

If a SPAL record already exists, indicating that this material is enroute either to or from storage then a deeper analysis must be made. If the material is enroute to storage and the storage location matches the source location then a request will be processed for this load upon its arrival in its storage location or immediately if the previous movement to a storage location is considered old. Old movements are assumed to never complete. However, if the material is enroute to storage and there is a mismatch in storage locations then the request will be ignored. If the material is enroute from a storage location (i.e. this is a duplicate request) and the previous movement is not old then the new request will also be ignored. If, on the other hand, the material is considered previously enroute for an old request then the new request will be satisfied. The exact definition of "old" material will be adjusted via trial and error.

Next, the destination area is categorized as by workstation or by functional area (a group of workstations) and the relevant workstation or functional area examined for available space. If no space is available, this DSS request is queued until space becomes available in the workstation or functional area and no further processing occurs at this time. However, if space is immediately available, an attempt is made to schedule a retrieval from rack storage.

Finally, if the aisle/stacker record (ASRS) indicates that the aisle is available for immediate use then the appropriate workstation is selected and a retrieve from high-rise (type "60") command is sent to the Stacker PLC. If the stacker isn't available to process this request immediately it is queued as a pending transaction for later processing. If invalid data was received, an error message is formatted and sent to the Stackman Traffic Controller Communications Process (S1.PN). This process sends formatted messages to the Stackman Message Logger Process (S2.PN) for possible logging.

3.2.6.5.2.2.2 **S5222.PN - DSS Pick/Stow Completion**

Process Name	Process ID #	Date
DSS Pick/Stow Completion	S5222.PN	November 11, 2002

Requirements ID #(s)
SECS-RC1.1.6, SECS-RC3.1

Process Narrative

This process accepts a Standard Movement Message (SMM) from the Stackman Traffic Controller Communications Process (S1.DFD) to assign workstation functions for picks, location surveys, or inventory by updating the Workstation (WKS2) Record (specifically, the wkst_logged_in flag). If DSS requests are already pending for this work type then the requests will trigger any existing workload to become routed to this workstation, as described in the Stacker Request process narrative (S5221.PN). Only the pick work type sends a workstation designation message.

3.2.6.5.2.2.3 **S5223.PN - DSS Workstation Designation**

Process Name	Process ID #	Date
DSS Workstation Designation	S5223.PN	November 11, 2002

Requirements ID #(s)
SECS-RC1.1.6, SECS-RC3.1

Process Narrative

This process accepts a "C" flag Standard Movement Message (SMM) from the Stackman Traffic Controller Communications Process (S1.PN), to complete either a retrieval request at a workstation (101-104) or to induct a stow request for a pallet at the induction workstation (105). If completion is at workstation the slave pallet record (SPAL) is updated and a store to high-rise message (type "70") is sent to the PLC and the pallet load is returned to the specified rack storage location. If completion is at the induction workstation, a new slave pallet record (SPAL) is created and a store to high-rise message (type "70") is ultimately sent to the PLC. The store to high-rise message must occur after the operator chooses to release the pallet via PanelView. Therefore, if an SMM is received prior to this PanelView release, ECS must buffer this movement until this PanelView release occurs. If invalid data was received, an error message is formatted and sent to the Stackman Traffic Controller Communications Process (S1.PN). If necessary, the Workstation (WKS2) record is updated to reflect the load that is being processed at a workstation. This process sends formatted messages to the Stackman Message Logger Process (S2.PN) for possible logging.

3.2.6.5.2.2.4 **S5224.PN - DSS Clear Workload**

Process Name	Process ID #	Date
DSS Clear Workload	S5224.PN	November 11, 2002

Requirements ID #(s)
SECS-RC1.1.6, SECS-RC3.1

Process Narrative

This process accepts a Standard Movement Message (SMM) from the Stackman Traffic Controller Communications Process (S1.PN), to clear the workload for the specified pick workstation (101-104). If the source field is for a location other than a pick workstation the message will be ignored. This process results in no further workload being assigned to this partial pick workstation.

Several categories that can be processed identically are DSS requests that haven't been passed through to the aisle queue, have been passed to the aisle queue but not put on a crane, or have been passed to the aisle queue and is currently on a crane. If DSS requests exists for the pick functional area and other workstations remain logged in, then these requests will be kept and processed by other workstations later. If, however, as a result of this logging out no workstations remain logged in then all requests of this functional area will be deleted. If DSS requests exist for this specific partial pick workstation then those requests will be deleted.

The above categories ECS was able to, and did, prevent movement assignment. If a conveyor movement is underway the movement can’t be reversed. This material will eventually find its way to the physical queue in front of a pick workstation and will be processed as described in the following paragraph.

The final category is material that is already at a workstation. Each slave pallet that arrives at a workstation can either be processed by DSS normally (S5222.PN - Pick/Stow Complete) or sent immediately back to rack storage unprocessed as the result of a Bypass Processing action. The DSS bypass conversation will take a wanded slave pallet barcode, re-identify the storage location of that slave pallet, and send a Completion SMM to return this pallet to rack storage. Consequently, ECS won't process a bypassed slave pallet any differently than a processed (e.g. via a pick program conversation) slave pallet.

3.2.6.5.2.3 **S523.DFD**

Process ID #	Date
S523.DFD - Manage Stackman Controller Transactions	November 11, 2002
Requirement ID #(s)	
SECS-RC1.1.6, SECS-RC3.1	

Data Flow Diagram

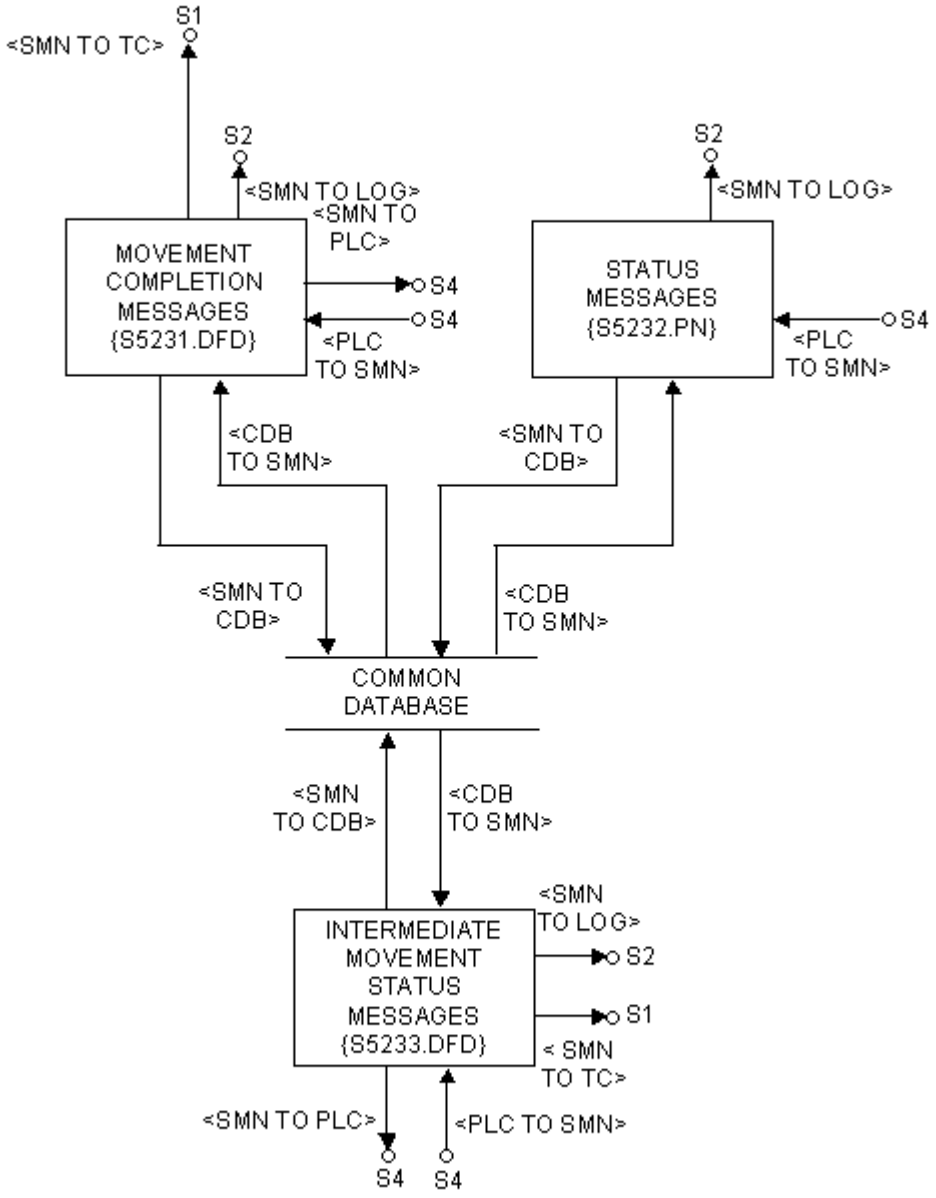

3.2.6.5.2.3.1 **S5231.DFD**

Process ID #	Date
S5231.DFD - Movement Complete Messages	November 11, 2002
Requirement ID #(s)	
SECS-RC1.1.6, SECS-RC3.1	

Data Flow Diagram

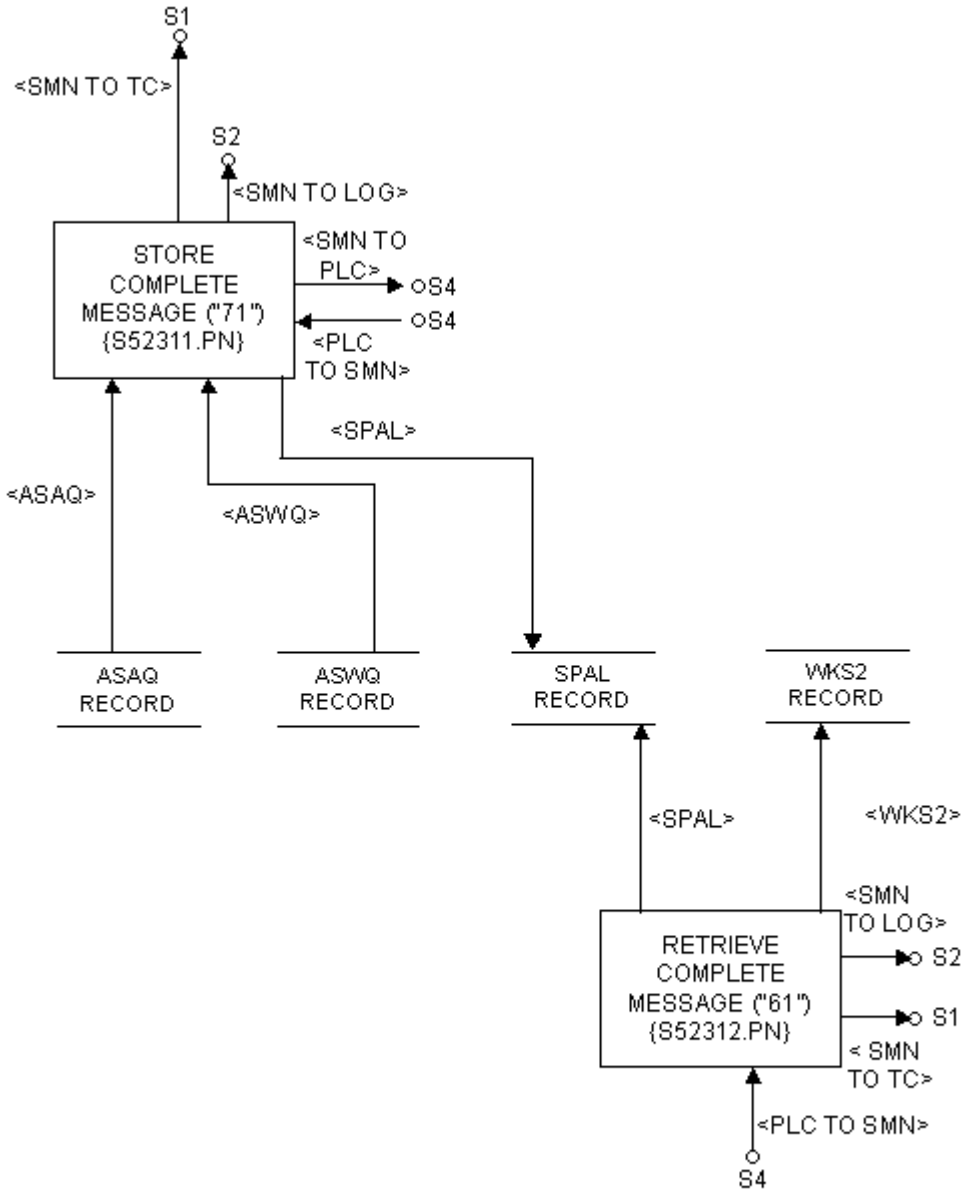

3.2.6.5.2.3.1.1 **S52311.PN - Store Complete Message ("71")**

Process Name	Process ID #	Date
Store Complete Message ("71")	S52311.PN	November 11, 2002
Requirements ID #(s)		
SECS-RC1.1.6, SECS-RC3.1		

Process Narrative

A store complete message indicates that a pallet has successfully arrived at a storage location. Upon receiving a store complete message ECS will typically delete the associated SPAL record. If, however, the ASAQ and ASWQ tables show pending work for this pallet then this work will be processed as in S5221.PN- DSS Stacker Request.

3.2.6.5.2.3.1.2 **S52312.PN - Retrieve Complete ("61") Message**

Process Name	Process ID #	Date
Retrieve Complete ("61") Message	S52312.PN	November 11, 2002
Requirements ID #(s)		
SECS-RC1.1.6, SECS-RC3.1		

Process Narrative

A retrieve complete message indicates that a pallet has been successfully pulled from a storage location to a workstation, completing an ECS request. ECS will update the status of the slave pallet (SPAL) record indicating the current location of the pallet. No essential processing by ECS occurs at this point; DSS processing by an operator occurs instead.

3.2.6.5.2.3.2 **S5232.PN - Status Messages ("51")**

Process Name	Process ID #	Date
Status Messages ("51")	S5232.PN	November 11, 2002
Requirements ID #(s)		
SECS-RC1.1.6, SECS-RC3.1		

Process Narrative

Upon receiving a status message ECS updates the status for the Transfer Car, Crane, Conveyor, or overall system. This status is logged but doesn't affect ECS processing. ECS will send all message types to the MHE System Commander at any time, regardless of the current status.

3.2.6.5.2.3.3 **S5233.DFD**

Process ID #	Date
S5233.DFD - Intermediate Movement Status Messages	November 11, 2002
Requirement ID #(s)	
SECS-RC1.1.6, SECS-RC3.1	

Data Flow Diagram

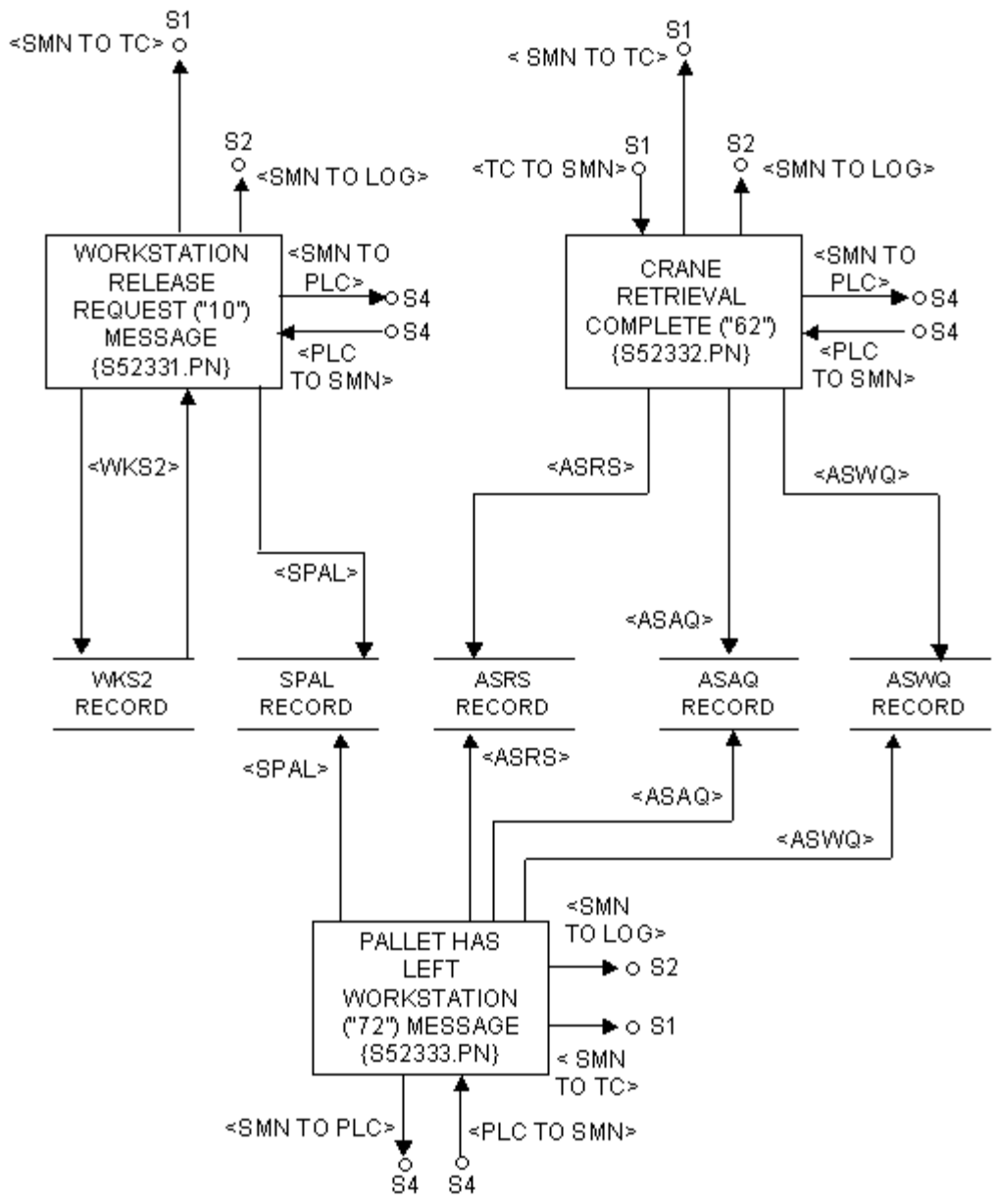

3.2.6.5.2.3.3.1 **S52331.PN - Workstation Release Request ("10") Message**

Process Name	Process ID #	Date
Workstation Release Request ("10") Message	S52331.PN	November 11, 2002

Requirements ID #(s)
SECS-RC1.1.6, SECS-RC3.1

Process Narrative

The Workstation Release Request message indicates that an operator has begun the process of releasing a pallet from a workstation. This is done through the PanelView PLC interface at the workstation. Upon receipt of this message, ECS considers the workstation ready for a release to storage ("70") message. If a DSS Pick/Stow Completion (S5222.PN) has been received then the release to storage ("70") message will be sent immediately. If not, the release to storage ("70") message will be sent upon receipt of the SMM.

3.2.6.5.2.3.3.2 **S52332.PN - Crane Retrieval Complete ("62")**

Process Name	Process ID #	Date
Crane Retrieval Complete ("62")	S52332.PN	November 11, 2002

Requirements ID #(s)
SECS-RC1.1.6, SECS-RC3.1

Process Narrative

A crane retrieval complete message means that a pallet has gone partway from a storage location to a workstation. The crane part of the movement has completed and the conveyor part of the movement has begun. Upon receipt of the crane retrieval message, ECS will select the highest priority queued retrieval workload for this aisle and send a Retrieval request (type "60"). If no queued retrieval workload exists then ECS will not send any message to the MHE. Also, if it appears that as many pallets have been put onto the conveyor as possible, then requests for other aisles that have material going to the same destination will be aborted. Aborting a command erases the request from the Stackman Controller (SC). These aborted requests will also be requeued by ECS for later retrieval.

3.2.6.5.2.3.3.3 **S52333.PN - Pallet has left Workstation ("72") Message**

Process Name	Process ID #	Date
Pallet has left Workstation ("72") Message	S52332.PN	November 11, 2002

Requirements ID #(s)
SECS-RC1.1.6, SECS-RC3.1

Process Narrative

A "72" message indicates that a pallet has left a workstation. ECS considers the workstation available to send another pallet to and will send a retrieval request ("60") to the system commander for a pallet if queued workload exists.

3.2.7 **N.DFD**

Process ID #	Date
N.DFD	October 20, 1995

Requirement ID #(s)

SECS-RC1, SECS-RC1.1.1, SECS-RC1.2, SECS-RC1.3, SECS-RC1.4, SECS-RC3, SECS-RC3.1, SECS-RC3.2, SECS-RC3.3, SECS-RC4, SECS-RC4.2, SECS-RC4.3, SECS-RC5, SECS-RI1, SECS-RI2

Data Flow Diagram

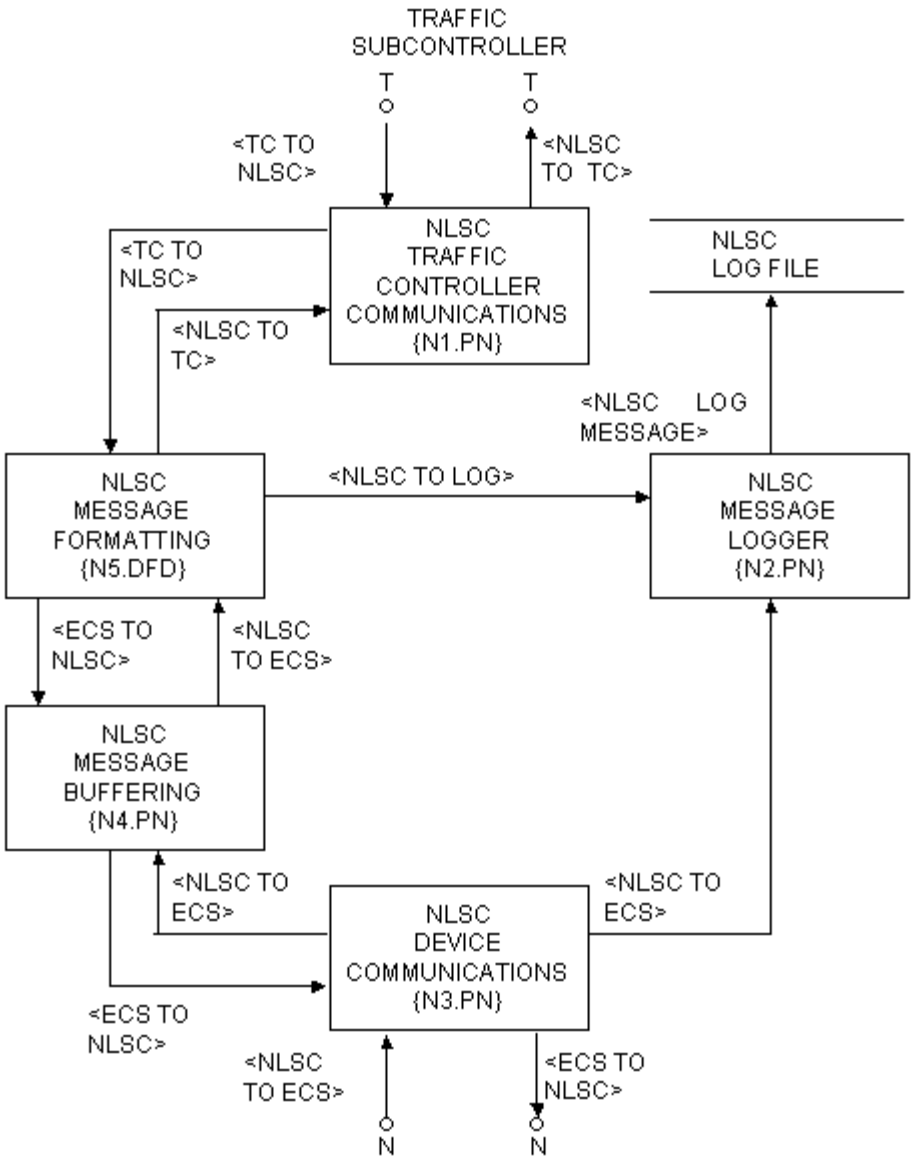

3.2.7.1 N1.PN - NLSC Traffic Controller Communications

Process Name	Process ID #	Date
NLSC Traffic Controller Communications	N1.PN	October 20, 1995

Requirements ID #(s)

SECS-RC1, SECS-RC1.1.1, SECS-RC1.2, SECS-RC1.3, SECS-RC1.4, SECS-RC5, SECS-RI1, SECS-RC3, SECS-RC3.2, SECS-RC3.3

Process Narrative

This process receives messages from the Traffic Controller (T.DFD) and passes them onto the NLSC Message Formatting Process. This process receives response and status messages from the NLSC Message Formatting Process and sends them to the Traffic Controller (T.DFD). This process handles all message transfer protocols and handshaking between the Traffic Controller (T.DFD) and the subcontroller (N.DFD). This process handles message transmission from memory or hardware.

3.2.7.2 N2.PN - NLSC Message Logger

Process Name	Process ID #	Date
NLSC Message Logger	N2.PN	October 20, 1995

Requirements ID #(s)
SECS-RC4, SECS-RC4.3

Process Narrative

This process receives messages from the NLSC Message Formatting Process and the NLSC Device Communications Process and if logging is enabled logs the message to the NLSC Log File.

3.2.7.3 N3.PN - NLSC Device Communications

Process Name	Process ID #	Date
NLSC Device Communications	N3.PN	October 20, 1995

Requirements ID #(s)

SECS-RI2, SECS-RC3, SECS-RC3.1, SECS-RC1, SECS-RC1.1.1, SECS-RC1.2, SECS-RC1.3, SECS-RC1.4, SECS-RC5

Process Narrative

This process receives messages from the NLSC Message Buffering Process and transmits them to the NLSC devices. This process receives acknowledgement and status responses from the NLSC devices and forwards them to the NLSC Message Buffering Process for further processing. This process sends device messages to the NLSC Message Logger Process for logging. This process handles all transfer protocols and handshaking required by the device communications.

3.2.7.4 N4.PN - NLSC Message Buffering

Process Name	Process ID #	Date
NLSC Message Buffering	N4.PN	October 20, 1995

Requirements ID #(s)
SECS-RC3, SECS-RC3.1, SECS-RC4, SECS-RC4.2

Process Narrative

This process will receive messages from the NLSC Message Formatting Process and the NLSC Device Communications Process and inserts and extracts the messages into and from their respective memory buffers.

3.2.7.5 N5.PN - NLSC Message Formatting

Process Name	Process ID #	Date
NLSC Message Formatting	N5.PN	October 20, 1995

Requirements ID #(s)

SECS-RI2, SECS-RC3, SECS-RC3.1, SECS-RC1, SECS-RC1.1.1, SECS-RC1.2, SECS-RC1.3, SECS-RC1.4, SECS-RC5

Process Narrative

This process receives messages from the NLSC Traffic Controller Communications Process and formats them for transmission to the NLSC. This process sends formatted messages to the NLSC Message Logger Process for logging. This process also receives messages from the NLSC Traffic Controller Communications Process for transmission to the Traffic Controller (T.DFD).

3.2.8 **A.DFD**

Process ID #	Date
A.DFD	November 1, 1996

Requirement ID #(s)

SECS-RC1, SECS-RC1.1, SECS-RC1.1.5, SECS-RC1.3, SECS-RC1.4, SECS-RC3, SECS-RC3.1, SECS-RC4, SECS-RC4.3, SECS-RC5, SECS-RC10, SECS-RI14

Data Flow Diagram

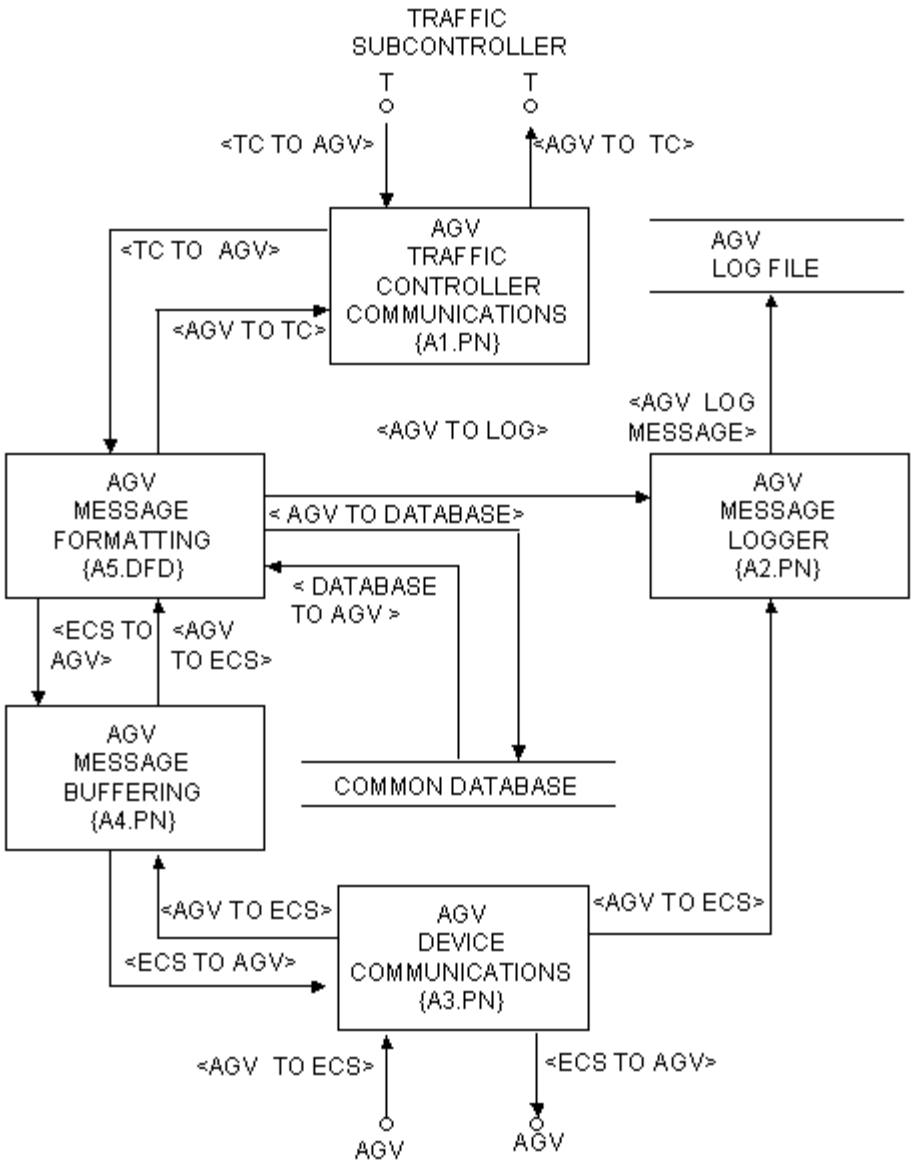

3.2.8.1 A1.PN - AGV Traffic Controller Communications

Process Name	Process ID #	Date
AGV Traffic Controller Communications	A1.PN	October 20, 1995

Requirements ID #(s)

SECS-RC1, SECS-RC1.1.5, SECS-RC1.2, SECS-RC1.3, SECS-RC1.4, SECS-RC5, SECS-RI1, SECS-RC3, SECS-RC3.2, SECS-RC3.3

Process Narrative

This process receives messages from the Traffic Controller (T.DFD) and passes them onto the AGV Message Formatting Process. This process receives response and status messages from the AGV Message Formatting Process and sends them to the Traffic Controller (T.DFD). This process handles all message transfer protocols and handshaking between the Traffic Controller (T.DFD) and the subcontroller (A.DFD). This process handles message transmission from memory or hardware.

3.2.8.2 A2.PN - AGV Message Logger

Process Name	Process ID #	Date
AGV Message Logger	A2.PN	October 20, 1995
Requirements ID #(s)		
SECS-RC4, SECS-RC4.3		

Process Narrative

This process receives messages from the AGV Message Formatting Process and the AGV Device Communications Process and if logging is enabled logs the message to the AGV Log File.

3.2.8.3 A3.PN - AGV Device Communications

Process Name	Process ID #	Date
AGV Device Communications	A3.PN	October 20, 1995

Requirements ID #(s)

SECS-RI8, SECS-RC3, SECS-RC3.1, SECS-RC1, SECS-RC1.1.5, SECS-RC1.2, SECS-RC1.3, SECS-RC1.4, SECS-RC5

Process Narrative

This process receives messages from the AGV Message Buffering Process and transmits them to the Navy AGV Controller. This process receives acknowledgements and status responses from the Navy AGV Controller and forwards them to the AGV Message Buffering Process for further processing. This process sends device messages to the AGV Message Logger Process for logging. This process handles all transfer protocols and handshaking required by the device communications.

3.2.8.4 A4.PN - AGV Message Buffering

Process Name	Process ID #	Date
AGV Message Buffering	A4.PN	October 20, 1995

Requirements ID #(s)
SECS-RC3, SECS-RC3.1, SECS-RC4, SECS-RC4.2

Process Narrative

This process will receive messages from the AGV Message Formatting Process and the AGV Device Communications Process and insert and extract the messages to and from their respective memory buffers.

3.2.8.5 A5.PN - AGV Message Formatting

Process Name	Process ID #	Date
AGV Message Formatting	A5.PN	October 20, 1995

Requirements ID #(s)

SECS-RI8, SECS-RC3, SECS-RC3.1, SECS-RC1, SECS-RC1.1.5, SECS-RC1.2, SECS-RC1.3, SECS-RC1.4, SECS-RC5

Process Narrative

This process receives messages from the AGV Traffic Controller Process and formats them for transmission to the Navy AGV Controller. This process sends formatted messages to the AGV Message Logger Process for logging. This process also receives messages from the AGV Message Buffering Process and forwards them to the AGV Traffic Controller Communications Process for transmission to the Traffic Controller (T.DFD).

3.2.8.6 **A5.DFD**

Process ID #	Date
A5.DFD	November 1, 1996

Requirement ID #(s)

SECS-RC1, SECS-RC1.1, SECS-RC1.1.5, SECS-RC1.3, SECS-RC1.4, SECS-RC3, SECS-RC3.1, SECS-RC4, SECS-RC4.3, SECS-RC5, SECS-RC10, SECS-RI14

Data Flow Diagram

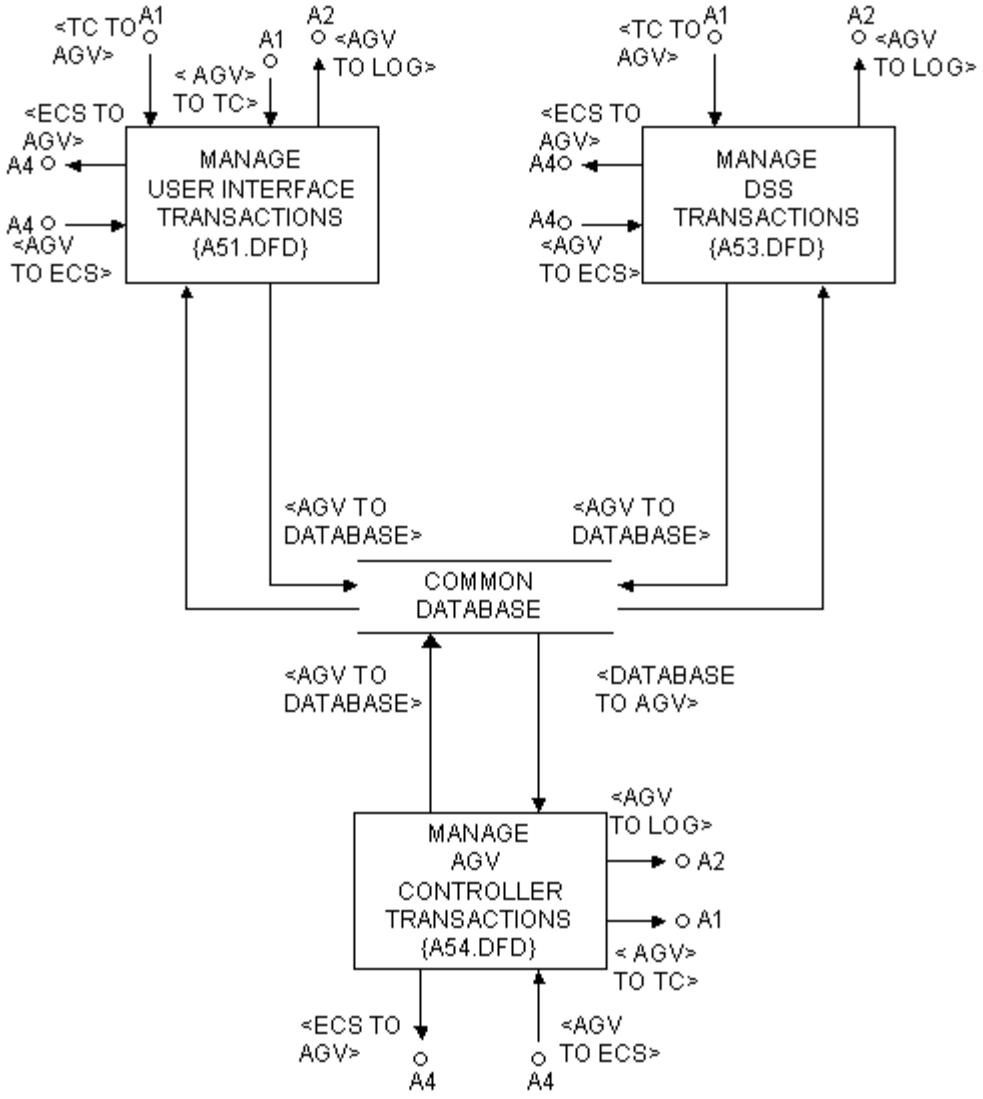

3.2.8.6.1 **A51.DFD**

Process ID #	Date
A51.DFD	November 1, 1996

Requirement ID #(s)

SECS-RC1, SECS-RC1.1, SECS-RC1.1.5, SECS-RC1.3, SECS-RC1.4, SECS-RC3, SECS-RC3.1, SECS-RC4, SECS-RC4.3, SECS-RC5, SECS-RC10, SECS-RI14

Data Flow Diagram

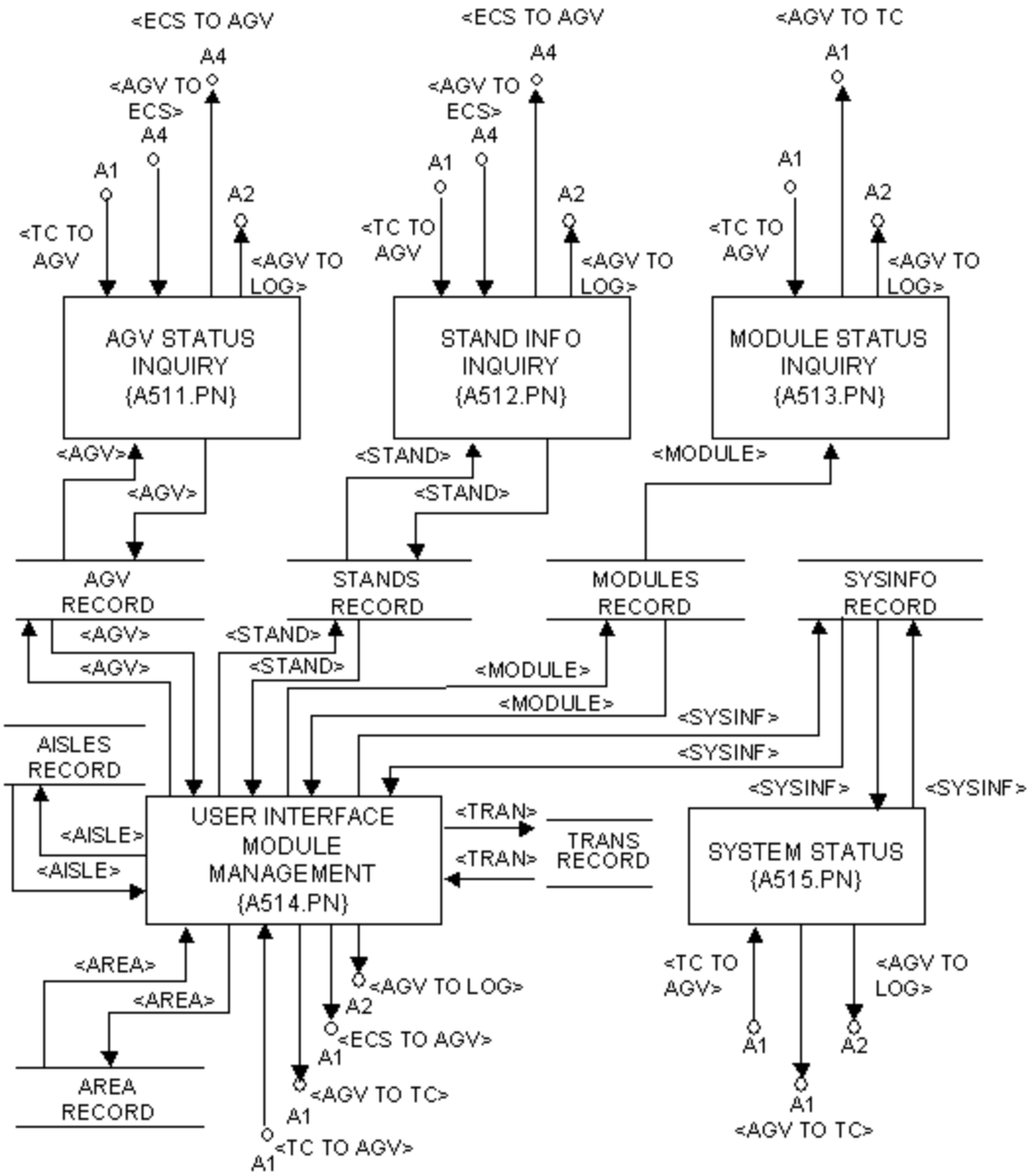

3.2.8.6.1.1 **A511.PN - AGV Status Inquiry**

Process Name	Process ID #	Date
AGV Status Inquiry	A511.PN	November 1, 1996

Requirements ID #(s)
SECS-RC3, SECS-RC3.1, SECS-RC4, SECS-RC4.3, SECS-RC5, SECS-RC10, SECS-RI14

Process Narrative

This process accepts an AGV Status inquiry from the AGV Traffic Controller Communications Process (A1.PN), then formats an AGV Inquiry Transaction (H03), sends it to the AGV Message Buffering Process (A4.PN). Upon receiving the AGV Inquiry Response (L03) from the AGV Message Buffering Process (A4.PN) it formats an AGV Status Transaction and sends the transaction back to the AGV Traffic Controller Communications Process (A1.PN). If invalid data was received, an error message is formatted and sent to the AGV Traffic Controller Communications Process (A1.PN). This process sends formatted messages to the AGV Message Logger Process (A2.PN) for possible logging.

3.2.8.6.1.2 **A512.PN - AGV Stand Info Inquiry**

Process Name	Process ID #	Date
AGV Stand Info Inquiry	A512.PN	November 1, 1996

Requirements ID #(s)
SECS-RC3, SECS-RC3.1, SECS-RC4, SECS-RC4.3, SECS-RC5, SECS-RC10, SECS-RI14

Process Narrative

This process accepts a Pickup & Delivery Stand Information inquiry from the AGV Traffic Controller Communications Process (A1.PN), then formats a Stand Inquiry Transaction (H04), sends it to the AGV Message Buffering Process (A4.PN). Upon receiving the Stand Inquiry Response (L04) from the AGV Message Buffering Process (A4.PN) it formats a Stand Status Transaction and sends the transaction back to the AGV Traffic Controller Communications Process (A1.PN). If invalid data was received, an error message is formatted and sent to the AGV Traffic Controller Communications Process (A1.PN). This process sends formatted messages to the AGV Message Logger Process (A2.PN) for possible logging.

3.2.8.6.1.3 **A513.PN - AGV Module Status Inquiry**

Process Name	Process ID #	Date
Module Status Inquiry	A513.PN	November 1, 1996

Requirements ID #(s)
SECS-RC3, SECS-RC3.1, SECS-RC4, SECS-RC4.3, SECS-RC5, SECS-RC10

Process Narrative

This process accepts a Module Status inquiry from the AGV Traffic Controller Communications Process (A1.PN), then searches through the Module Records to collect Module Status information, formats a Module Status Transaction and send the transaction back to the AGV Traffic Controller Communications Process (A1.PN). If invalid data was received, an error message is formatted and sent to the AGV Traffic Controller Communications Process (A1.PN). This process sends formatted messages to the AGV Message Logger Process (A2.PN) for possible logging.

3.2.8.6.1.4 **A514.DFD**

Process ID #	Date
A514.DFD	November 1, 1996

Requirement ID #(s)

SECS-RC1, SECS-RC1.1, SECS-RC1.1.5, SECS-RC1.3, SECS-RC1.4, SECS-RC3, SECS-RC3.1, SECS-RC4, SECS-RC4.3, SECS-RC5, SECS-RC10, SECS-RI14

Data Flow Diagram

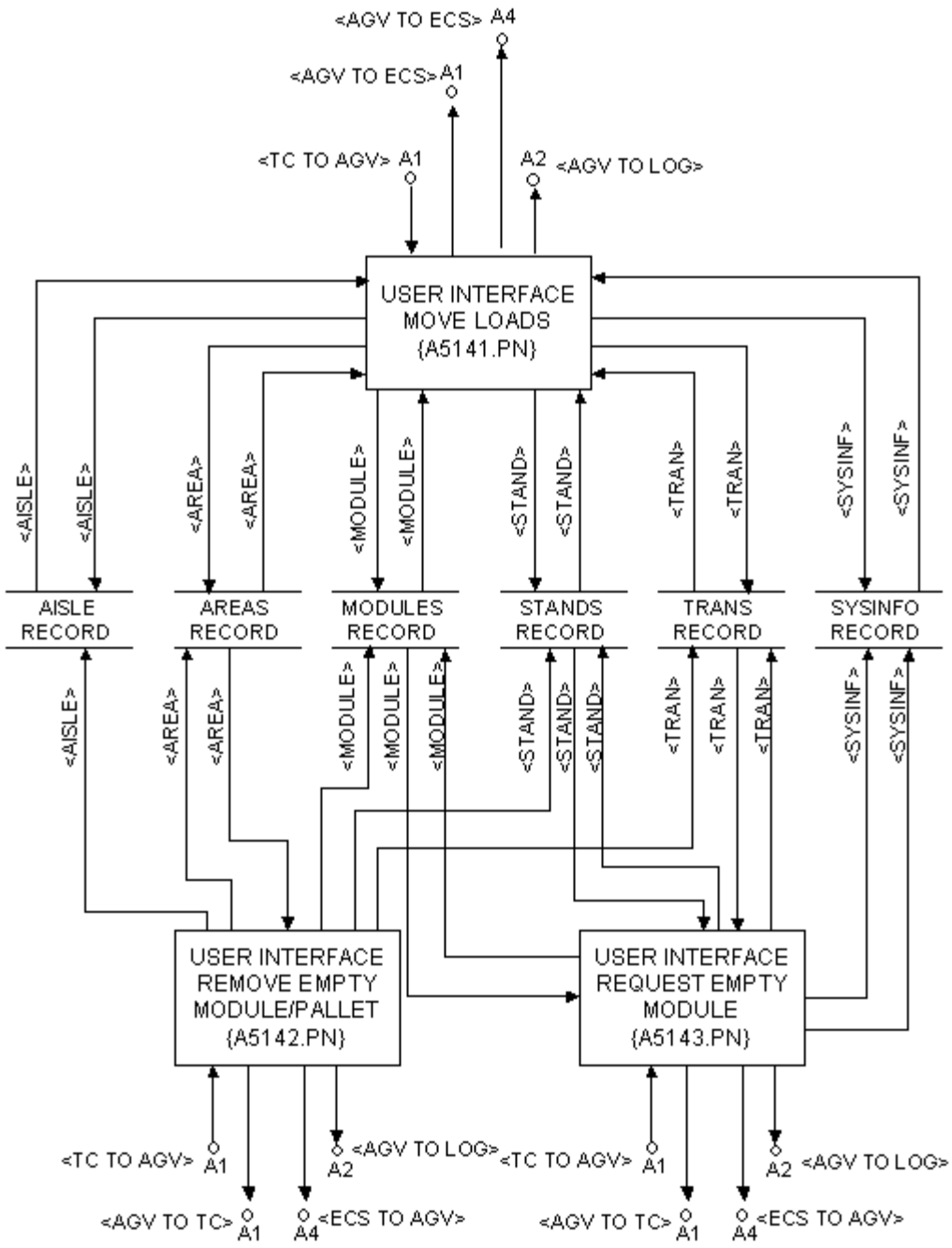

3.2.8.6.1.4.1 **A5141.PN - UI Move Loads**

Process Name	Process ID #	Date
UI Move Loads	A5141.PN	November 1, 1996

Requirements ID #(s)

SECS-RC1, SECS-RC1.1, SECS-RC1.1.5, SECS-RC1.3, SECS-RC1.4, SECS-RC3, SECS-RC3.1, SECS-RC4, SECS-RC4.3, SECS-RC5, SECS-RC10, SECS-RI14

Process Narrative

This process accepts a User Interface request from the AGV Traffic Controller Communications module (A1.PN), to move a loaded Module from one Pickup and Delivery (P&D) Stand to another. A Transaction Record is generated. If the specified destination P&D stand is unavailable the first empty staging stand in the area is selected for the destination and the appropriate queue linkage is updated (if the destination is High Rise Storage, it is linked to the Aisle Input Queue). The source P&D stand and Module records are updated and an AGV Pickup and Delivery Transaction (H01) is formatted and sent to the AGV Message Buffering Process (A4.PN). If invalid data was received, an error message is formatted and sent to the AGV Traffic Controller Communications Process (A1.PN). This process sends formatted messages to the AGV Message Logger Process (A2.PN) for possible logging.

3.2.8.6.1.4.2 **A5142.PN - UI Remove Empty Module/Pallet**

Process Name	Process ID #	Date
UI Remove Empty Module/Pallet	A5142.PN	November 1, 1996

Requirements ID #(s)

SECS-RC1, SECS-RC1.1, SECS-RC1.1.5, SECS-RC1.3, SECS-RC1.4, SECS-RC3, SECS-RC3.1, SECS-RC4, SECS-RC4.3, SECS-RC5, SECS-RC10, SECS-RI14

Process Narrative

This process accepts a User Interface request from the AGV Traffic Controller Communications Process (A1.PN), to move an empty Module or Pallet from a specified Pickup and Delivery (P&D) Stand. A Transaction Record is generated. The destination P&D stand is not specified; therefore, the first empty staging stand in the area is selected for the destination. The source P&D stand record is updated and if a Module is being removed, the Module record is updated. An AGV Pickup and Delivery Transaction (H01) is formatted and sent to the AGV Message Buffering Process (A4.PN). If invalid data was received, an error message is formatted and sent to the AGV Traffic Controller Communications Process (A1.PN). This process sends formatted messages to the AGV Message Logger Process (A2.PN) for possible logging.

3.2.8.6.1.4.3 **A5143.PN - UI Request Empty Module**

Process Name	Process ID #	Date
UI Request Empty Module	A5143.PN	November 1, 1996

Requirements ID #(s)

SECS-RC1, SECS-RC1.1, SECS-RC1.1.5, SECS-RC1.3, SECS-RC1.4, SECS-RC3, SECS-RC3.1, SECS-RC4, SECS-RC4.3, SECS-RC5, SECS-RC10, SECS-RI14

Process Narrative

This process accepts a User Interface request from the AGV Traffic Controller Communications Process (A1.PN), to move an empty Module to a specified Pickup and Delivery (P&D) Stand. A Transaction Record is generated. The first empty Module on the area staging P&Ds queue is selected from the Sysinfo Record. The source P&D stand and Module records are updated and an AGV Pickup and Delivery Transaction (H01) is formatted and sent to the AGV Message Buffering Process (A4.PN). If invalid data was received, an error message is formatted and sent to the AGV Traffic Controller Communications Process (A1.PN). This process sends formatted messages to the AGV Message Logger Process (A2.PN) for possible logging.

3.2.8.6.1.5 **A515.DFD**

Process ID #	Date
A515.DFD	November 1, 1996

Requirement ID #(s)

SECS-RC1, SECS-RC1.1, SECS-RC1.1.5, SECS-RC1.3, SECS-RC1.4, SECS-RC3, SECS-RC3.1, SECS-RC4, SECS-RC4.3, SECS-RC5, SECS-RI14

Data Flow Diagram

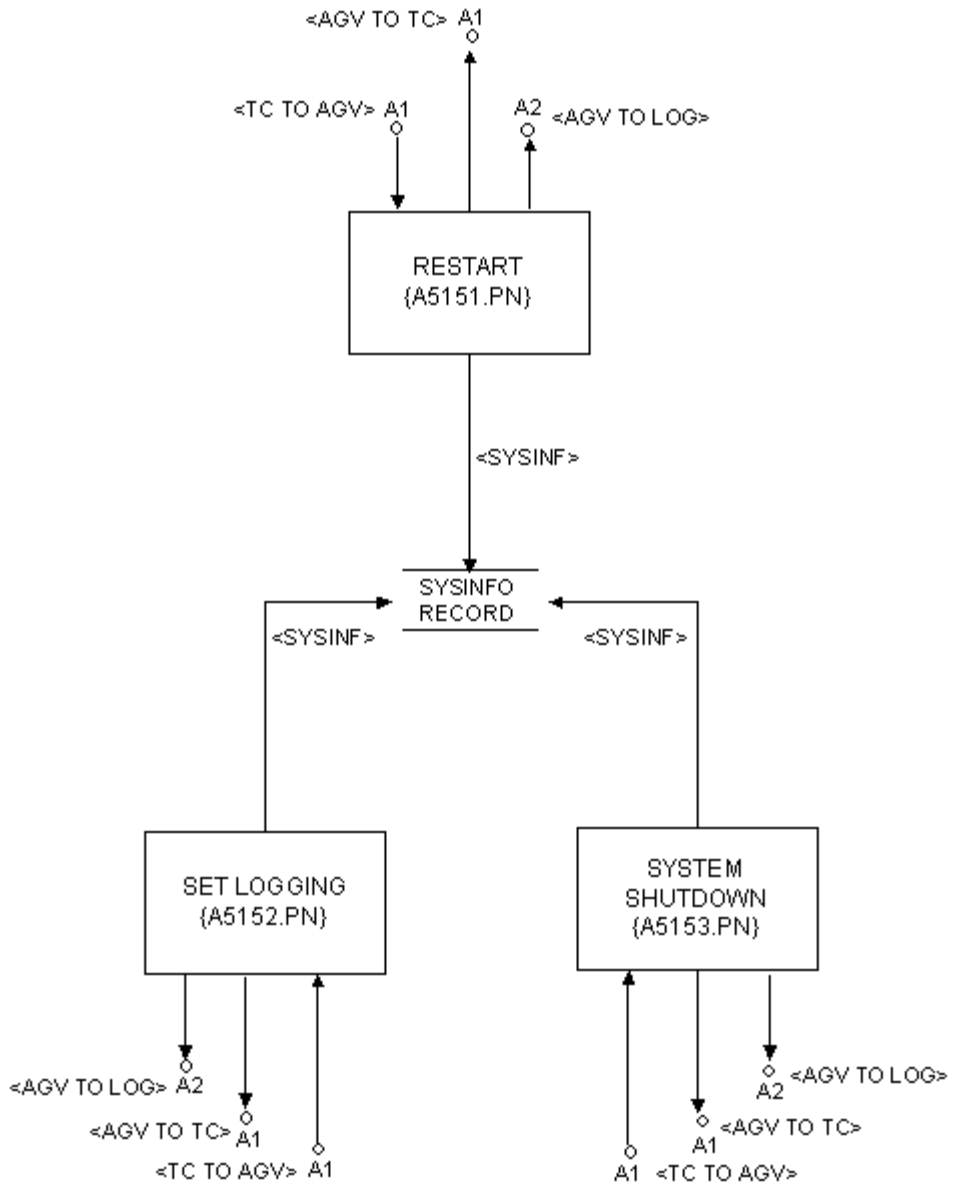

3.2.8.6.1.5.1 **A151.PN - Restart**

Process Name	Process ID #	Date
Restart	A5151.PN	November 1, 1996

Requirements ID #(s)
SECS-RC3, SECS-RC3.1, SECS-RC4, SECS-RC4.3, SECS-RC5

Process Narrative

This process accepts a User Interface request from the AGV Traffic Controller Communications Process (A1.PN) to set the AGV Subcontroller logically online or offline. The system information is updated accordingly. If invalid data was received, an error message is formatted and sent to the AGV Traffic Controller Communications Process (A1.PN). This process sends formatted messages to the AGV Message Logger Process (A2.PN) for possible logging.

3.2.8.6.1.5.2 **A5152.PN - Set Logging**

Process Name	Process ID #	Date
Set Logging	A5152.PN	November 1, 1996

Requirements ID #(s)
SECS-RC3, SECS-RC3.1, SECS-RC4, SECS-RC4.3, SECS-RC5

Process Narrative

This process accepts a User Interface request from the AGV Traffic Controller Communications Process (A1.PN) to turn the UserLog.Post Process either on or off. Either UserLog.TurnOn or UserLog.TurnOff is called depending on the input parameter. If invalid data was received, an error message is formatted and sent to the AGV Traffic Controller Communications Process (A1.PN). This process sends formatted messages to the AGV Message Logger Process (A2.PN) for possible logging.

3.2.8.6.1.5.3 **A5153.PN - System Shutdown**

Process Name	Process ID #	Date
System Shutdown	A5153.PN	November 1, 1996

Requirements ID #(s)

SECS-RC3, SECS-RC3.1, SECS-RC4, SECS-RC4.3, SECS-RC5

Process Narrative

This process accepts a User Interface request from the AGV Traffic Controller Communications Process (A1.PN) to set a flag to shut down the Unit Controller, including the Link objects it uses. If invalid data was received, an error message is formatted and sent to the AGV Traffic Controller Communications Process (A1.PN). This process sends formatted messages to the AGV Message Logger Process (A2.PN) for possible logging.

3.2.8.6.2 **A52.DFD**

Process ID #	Date
A52.DFD	November 1, 1996

Requirement ID #(s)

SECS-RC1, SECS-RC1.1, SECS-RC1.1.5, SECS-RC1.3, SECS-RC1.4, SECS-RC3, SECS-RC3.1, SECS-RC4, SECS-RC4.3, SECS-RC5, SECS-RC10, SECS-RI14

Data Flow Diagram

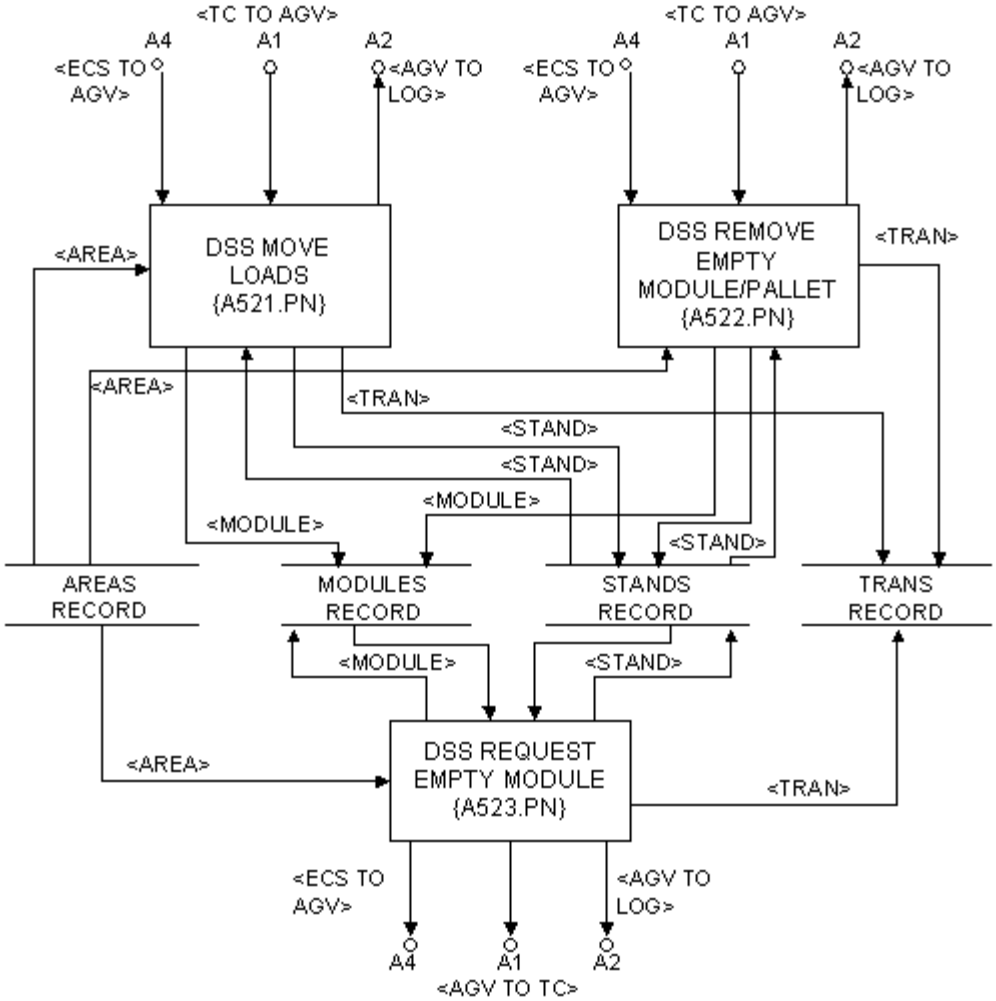

3.2.8.6.2.1 **A521.PN - DSS Move Loads**

Process Name	Process ID #	Date
DSS Move Loads	A521.PN	November 1, 1996

Requirements ID #(s)

SECS-RC1, SECS-RC1.1, SECS-RC1.1.5, SECS-RC1.2, SECS-RC1.3, SECS-RC1.4, SECS-RC3, SECS-RC3.1, SECS-RC4, SECS-RC4.3, SECS-RC5, SECS-RC10, SECS-RI14

Process Narrative

This process accepts an Upper Tier request from the AGV Traffic Controller Communications module (A1.PN), to move a loaded Module from one Pickup and Delivery (P&D) Stand to another. A Transaction Record is generated. If the specified destination P&D stand is unavailable, the first empty staging stand in the area is selected for the destination and the appropriate queue linkage is updated. The source P&D stand and Module records are updated and an AGV Pickup and Delivery Transaction (H01) is formatted and sent to the AGV Message Buffering Process (A4.PN). This process sends formatted messages to the AGV Message Logger Process (A2.PN) for possible logging.

3.2.8.6.2.2 A522.PN - DSS Remove Empty Module/Pallet

Process Name	Process ID #	Date
DSS Remove Empty Module/Pallet	A522.PN	November 1, 1996

Requirements ID #(s)

SECS-RC1, SECS-RC1.1, SECS-RC1.1.5, SECS-RC1.2, SECS-RC1.3, SECS-RC1.4, SECS-RC3, SECS-RC3.1, SECS-RC4, SECS-RC4.3, SECS-RC5, SECS-RC10, SECS-RI14

Process Narrative

This process accepts an Upper Tier request from the AGV Traffic Controller Communications Process (A1.PN), to move an empty Module or Pallet from a specified Pickup and Delivery (P&D) Stand. A Transaction Record is generated. The destination P&D stand is not specified; therefore, the first empty staging stand in the area is selected for the destination. The source P&D stand record is updated and if a Module is being moved, the Module record is updated. An AGV Pickup and Delivery Transaction (H01) is formatted and sent to the AGV Message Buffering Process (A4.PN). This process sends formatted messages to the AGV Message Logger Process (A2.PN) for possible logging.

3.2.8.6.2.3 A523.PN - DSS Request Empty Module

Process Name	Process ID #	Date
DSS Request Empty Module	A523.PN	November 1, 1996

Requirements ID #(s)

SECS-RC1, SECS-RC1.1, SECS-RC1.1.5, SECS-RC1.2, SECS-RC1.3, SECS-RC1.4, SECS-RC3, SECS-RC3.1, SECS-RC4, SECS-RC4.3, SECS-RC5, SECS-RC10, SECS-RI14

Process Narrative

This process accepts an Upper Tier request from the AGV Traffic Controller Communications Process (A1.PN), to move an empty Module to a specified Pickup and Delivery (P&D) Stand. A Transaction Record is generated. The first empty Module on the staging P&Ds in the area is selected. The source P&D stand and Module records are updated and an AGV Pickup and Delivery Transaction (H01) is formatted and sent to the AGV Message Buffering Process (A4.PN). This process sends formatted messages to the AGV Message Logger Process (A2.PN) for possible logging.

3.2.8.6.3 **A53.DFD**

Process ID #	Date
A53.DFD	November 1, 1996

Requirement ID #(s)

SECS-RC1, SECS-RC1.1, SECS-RC1.1.5, SECS-RC1.3, SECS-RC1.4, SECS-RC3, SECS-RC3.1, SECS-RC4, SECS-RC4.3, SECS-RC5, SECS-RC10, SECS-RI14

Data Flow Diagram

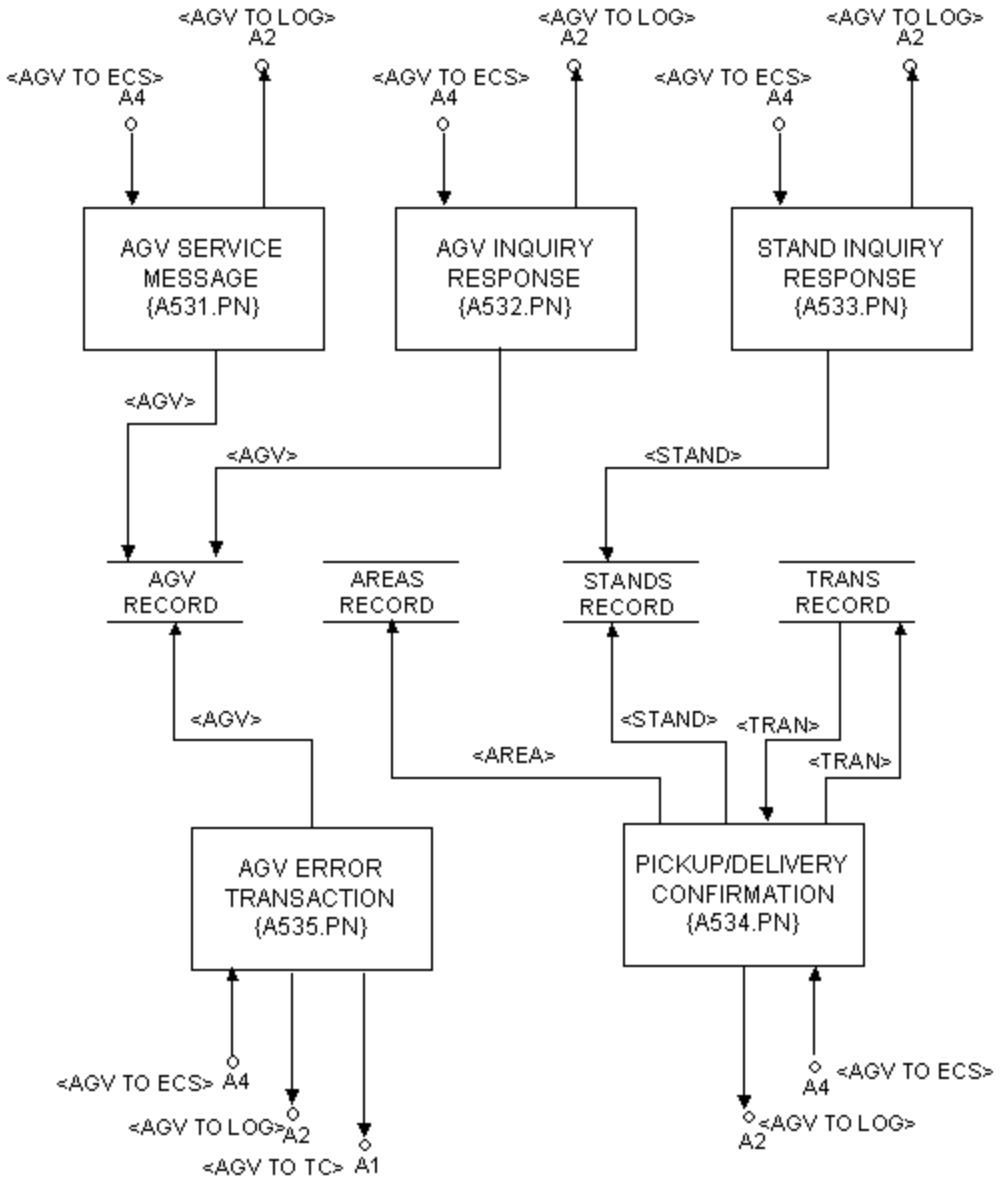

3.2.8.6.3.1 **A531.PN - AGV Service Message**

Process Name	Process ID #	Date
AGV Service Message	A531.PN	November 1, 1996

Requirements ID #(s)
SECS-RC3, SECS-RC3.1, SECS-RC4, SECS-RC4.3, SECS-RC5, SECS-RI14

Process Narrative

This process accepts an AGV Service Message (L01 or L02) from the AGV Message Buffering Process (A4.PN) and updates the AGV Database Record. This process sends formatted messages to the AGV Message Logger Process (A2.PN) for possible logging.

3.2.8.6.3.2 **A532.PN - AGV Inquiry Response**

Process Name	Process ID #	Date
AGV Inquiry Response	A532.PN	November 1, 1996

Requirements ID #(s)
SECS-RC3, SECS-RC3.1, SECS-RC4, SECS-RC4.3, SECS-RC5, SECS-RI14

Process Narrative

This process accepts an AGV Inquiry Response (L03) from the AGV Message Buffering Process (A4.PN) and updates the AGV Database Record. This process sends formatted messages to the AGV Message Logger Process (A2.PN) for possible logging.

3.2.8.6.3.3 **A533.PN - Stand Inquiry Response**

Process Name	Process ID #	Date
Stand Inquiry Response	A533.PN	November 1, 1996

Requirements ID #(s)
SECS-RC3, SECS-RC3.1, SECS-RC4, SECS-RC4.3, SECS-RC5, SECS-RI14

Process Narrative

This process accepts a Stand Inquiry Response (L04) from the AGV Message Buffering Process (A4.PN) and updates the Stand Database Record. This process sends formatted messages to the AGV Message Logger Process (A2.PN) for possible logging.

3.2.8.6.3.4 **A534.PN - Pickup/Delivery Confirmation**

Process Name	Process ID #	Date
Pickup/Delivery Confirmation	A534.PN	November 1, 1996

Requirements ID #(s)
SECS-RC3, SECS-RC3.1, SECS-RC4, SECS-RC4.3, SECS-RC5, SECS-RC10, SECS-RI14

Process Narrative

This process accepts an AGV Pickup/Delivery Confirmation (L05) from the AGV Message Buffering Process (A4.PN) when the pickup portion of a specific transaction is completed and confirmed, and when the delivery portion of that transaction is completed and confirmed. The Transaction Record is read. If the Stand ID is the Source P&D, the Stand Database Record is updated by blanking the Transaction ID, setting Status to Empty, blanking the Module ID and linking to the area empty stand queue if applicable. If the Stand ID is the Destination P&D, the Stand Database Record is updated by blanking the Transaction ID, setting the status to Occupied, setting the Module ID and unlinking it from the area empty stand queue if applicable. This process sends formatted messages to the AGV Message Logger Process (A2.PN) for possible logging.

3.2.8.6.3.5 **A535.PN - AGV Error Transaction**

Process Name	Process ID #	Date
AGV Error Transaction	A535.PN	November 1, 1996

Requirements ID #(s)

SECS-RC3, SECS-RC3.1, SECS-RC4, SECS-RC4.3, SECS-RC5, SECS-RI14

Process Narrative

This process accepts an AGV Error Transaction (L99) from the AGV Message Buffering Process (A4.PN) and updates the AGV Record. A Warning Message (Z04) is formatted and sent to the AGV Device Communications Process (A3.PN). This process sends formatted messages to the AGV Message Logger Process (A2.PN) for possible logging.

3.2.9 **H.DFD**

Process ID #	Date
H.DFD	November 1, 1996

Requirement ID #(s)

SECS-RC1, SECS-RC1.1.1, SECS-RC1.8, SECS-RC8, SECS-RC10, SECS-RC11, SECS-RI13

Data Flow Diagram

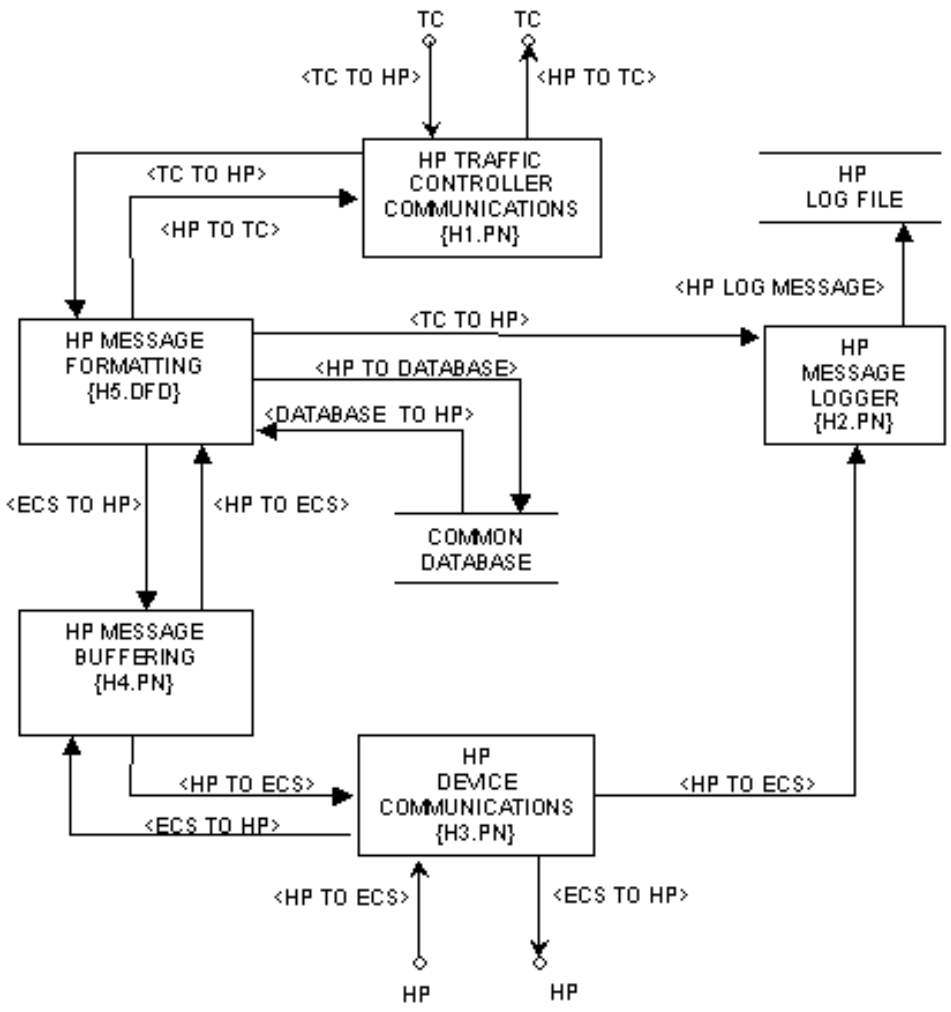

3.2.9.1 H1.PN - HP Traffic Controller Communications

Process Name	Process ID #	Date
HP Traffic Controller Communications	H1.PN	November 1, 1996

Requirements ID #(s)
SECS-RC1, SECS-RC1.1.1, SECS-RC1.1.8

Process Narrative

This process receives messages from the Traffic Controller (T.DFD) and passes them onto the HP Message Formatting Process. This process receives response and status messages from the HP Message Formatting Process and sends them to the Traffic Controller (T.DFD). This process handles all message transfer protocols and handshaking between the Traffic Controller (T.DFD) and the subcontroller (H.DFD). This process handles message transmission from memory or hardware.

3.2.9.2 H2.PN - HP Message Logger

Process Name	Process ID #	Date
HP Message Logger	H2.PN	November 1, 1996

Requirements ID #(s)
SECS-RC4, SECS-RC4.3

Process Narrative

This process receives messages from the HP Message Formatting Process and the HP Device Communications Process and, if logging is enabled, logs the message to the HP Log File.

3.2.9.3 H3.PN - HP Device Communications

Process Name	Process ID #	Date
HP Device Communications	H3.PN	November 1, 1996

Requirements ID #(s)

SECS-RI2, SECS-RC3, SECS-RC3.1, SECS-RC1, SECS-RC1.1, SECS-RC1.1.1, SECS-RC1.2, SECS-RC1.3, SECS-RC1.4, SECS-RC5

Process Narrative

This process receives messages from the HP Message Buffering Process and transmits them to the HP devices. This process receives acknowledgement and status responses from the HP devices and forwards them to the HP Message Buffering Process for further processing. This process sends device messages to the HP Message Logger Process for logging. This process handles all transfer protocols and handshaking required by the device communications.

3.2.9.4 H4.PN - HP Message Buffering

Process Name	Process ID #	Date
HP Message Buffering	H4.PN	November 1, 1996

Requirements ID #(s)

SECS-RC3, SECS-RC3.1, SECS-RC4, SECS-RC4.2

Process Narrative

This process will receive messages from the HP Message Formatting Process and the HP Device Communications Process and inserts and extracts the messages into and from their respective memory buffers.

3.2.9.5 H5.PN - HP Message Formatting

Process Name	Process ID #	Date
HP Message Formatting	H5.PN	November 1, 1996

Requirements ID #(s)

SECS-RI2, SECS-RC3, SECS-RC3.1, SECS-RC1, SECS-RC1.1.1, SECS-RC1.2, SECS-RC1.3, SECS-RC1.4, SECS-RC5, SECS-RC8, SECS-RC10, SECS-RC11

Process Narrative

This process receives messages from the HP Traffic Controller Communications Process and formats them for transmission to the HP. This process sends formatted messages to the HP Message Logger Process for logging. This process also receives messages from the HP Traffic Controller Communications Process for transmission to the Traffic Controller (T.DFD). This process uses the messages received for buffering to maintain the common database by adding, deleting, and modifying chain, move, carousel, tote, module, and consolidation database files.

3.2.10 **P.DFD**

Process ID #	Date
P.DFD	November 1, 1996

Requirement ID #(s)

SECS-RC1, SECS-RC1.1.8, SECS-RC1.2, SECS-RC1.3, SECS-RC1.4, SECS-RC3, SECS-RC3.1, SECS-RC3.2, SECS-RC3.3, SECS-RC4, SECS-RC4.2, SECS-RC4.3, SECS-RC5, SECS-RC8, SECS-RC10, SECS-RI1, SECS-RI11

Data Flow Diagram

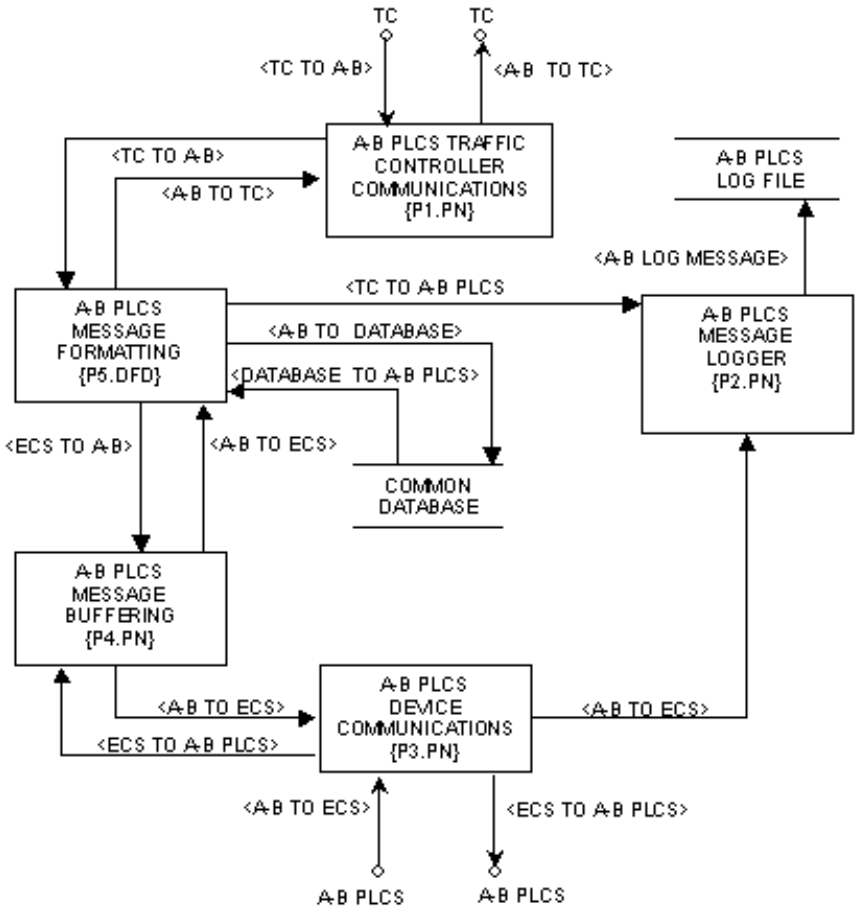

3.2.10.1 P1.PN - A-B PLCS Traffic Controller Communications

Process Name	Process ID #	Date
A-B PLCS Traffic Controller Communications	P1.PN	November 1, 1996

Requirements ID #(s)

SECS-RC1, SECS-RC1.1.8, SECS-RC1.2, SECS-RC1.3, SECS-RC1.4, SECS-RC3, SECS-RC3.2, SECS-RC3.3, SECS-RC5, SECS-RI1

Process Narrative

The A-B PLCS Interface Manager accepts and receives transactions from the Traffic Controller (T.DFD) and passes them to the A-B PLCS Message Formatting and Scheduling Process. This process handles all message transfer protocols and handshaking between the Traffic Controller (T.DFD) and the subcontroller (P.DFD). This process handles message transmission from memory or hardware.

3.2.10.2 P2.PN - A-B PLCS Message Logger

Process Name	Process ID #	Date
A-B PLCS Message Logger	P2.PN	November 1, 1996

Requirements ID #(s)
SECS-RC4, SECS-RC4.3

Process Narrative

The A-B PLCS Message Logger accepts messages from the A-B PLCS Message Formatting and Scheduling process and writes them to a disk file, if logging is enabled.

3.2.10.3 P3.PN - A-B PLCS Device Communications

Process Name	Process ID #	Date
A-B PLCS Device Communications	P3.PN	November 1, 1996

Requirements ID #(s)

SECS-RC1, SECS-RC1.1.8, SECS-RC1.2, SECS-RC1.3, SECS-RC1.4, SECS-RC3, SECS-RC3.1, SECS-RC5, SECS-RI11

Process Narrative

The A-B PLCS Device Communications process accepts messages from the A-B PLCS Message Buffering process and transmits them to the A-B PLCS. This process receives acknowledgement and status responses from the A-B PLCS Controllers and forwards them to the A-B PLCS Message Buffer Process for further processing. This process sends device messages to the A-B PLCS Message Logger Process for logging. This process handles all transfer protocols and handshaking required by the device communications.

3.2.10.4 P4.PN - A-B PLCS Message Buffering

Process Name	Process ID #	Date
A-B PLCS Message Buffering	P4.PN	November 1, 1996

Requirements ID #(s)
SECS-RC3, SECS-RC3.1, SECS-RC4, SECS-RC4.2

Process Narrative

The A-B PLCS Message Buffering Process receives messages from and sends messages to both the A-B PLCS Message Formatting and Scheduling process and the A-B PLCS Device Communications process. This process inserts and extracts the messages into and from their respective memory buffers.

3.2.10.5 P5.PN - A-B PLCS Message Formatting and Scheduling

Process Name	Process ID #	Date
A-B PLCS Message Formatting and Scheduling	P5.PN	November 1, 1996

Requirements ID #(s)

SECS-RC1, SECS-RC1.1.8, SECS-RC1.2, SECS-RC1.3, SECS-RC1.4, SECS-RC3, SECS-RC3.1, SECS-RC5, SECS-RC8, SECS-RC10, SECS-RI11

Process Narrative

This process receives messages from the A-B PLCS Traffic Controller Communications process and formats them for transmission to the A-B PLC Controllers.

All Standard Movement Messages (SMMs) for LTL Packing Pallet Moves, Receiving to Module Load Tote Moves, and Bin Packing to Consolidation/Offer are formatted and sent to the A-B PLCS Message Buffering process for transmission to the A-B PLCS.
Both Tote and Pallet tracking information is stored in the TOTE record within the Common Database. The Tote and Pallet records are not deleted from the database, as they are a fixed range of identifiers.

The movement messages generated at the time of pick complete to Bin Packing are written to a barcode (MOVE) in the Common Database until the barcode is scanned by the A-B sorter PLC. The MOVE is read from the Common Database and a Bin Packing Move message is formatted and sent to the A-B PLCS Message Buffering process for transmission to the A-B sorter. The MOVE record is then deleted from the Common Database.

For tracking purposes in the Tote Receiving area, control number (MOVE) and Module Load (MODULE) records are written to the Common Database. At the time of RF Putaway Complete, the MOVE record is deleted. When all MOVE records are removed for a specific MODULE, the MODULE record is deleted.

This process also sends formatted messages to the A-B PLCS Message Logger Process for logging, if logging is enabled.

This process receives and responds to requests for status from the Traffic Controller.

3.2.11 **M1.DFD**

Process ID #	Date
M1.DFD	November 1, 1996

Requirements ID #(s)
SECS-RC8

Process Narrative

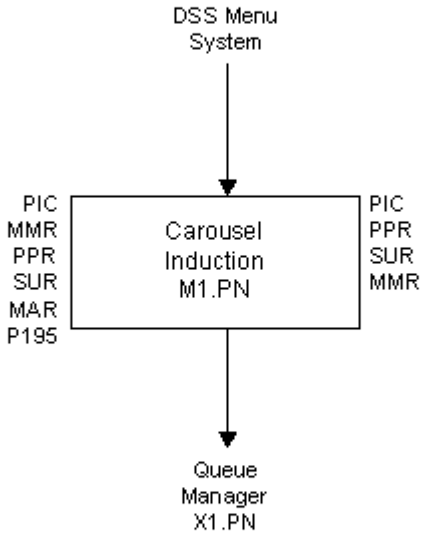

3.2.11.1 M1.PN - Packing Carousel

Process Name	Process ID #	Date
Packing Carousel	M1.PN	November 1, 1996

Requirements ID #(s)
SECS-RC8

Process Narrative

CAROUSEL INDUCTION

The operator at the carousel induction station will scan the pick control number (PCN) of the materiel to be inducted. If the materiel will fit into a single tote, the operator will scan the tote-ID. If multiple totes are required, the operator will scan a new bar-coded pick control number, tote-ID and enter the quantity for each tote.

If the material is for a single-line/single-pick shipment unit (even if it is being split into multiple totes), an SMM transaction for each PCN will be sent to ECS to send the materiel to the pack station. Otherwise, the process will determine if the arrival of this pick completes the shipment unit. If the shipment unit is complete, an SMM transaction for each PCN in the carousel (in addition to the PCN being inducted) will be sent to ECS to move the materiel to the pack station. Each SMM sent for a PCN in the carousel will cause its PICKS-IN-CAROUSELS record to be deleted.

For a multi-line shipment unit, the parameters for the release count (maximum number of picks to hold the carousel) or the hold time (maximum time to hold an incomplete shipment unit in the carousel). If either condition is met, SMMs will be sent to ECS to move the materiel to packing. If the materiel is to be placed in the carousel, an SMM will be sent to ECS and the pick will be added to the PICKS-IN-CAROUSEL file.

When the operator wants to determine if a shipment unit is complete, the operator invokes the SHIPMENT UNITS IN CAROUSEL inquiry. To release a shipment unit, the operator enters an "R" to the left of the shipment unit displayed on the screen. If the operator wishes to view all the Pick Control Numbers being accumulated for the Shipment Unit, he/she enters a "V" to the left of the Shipment Unit. The process will test the selection code and if it is an "R" release the shipment unit, or if it is a "V" display the SHIPMENT UNIT DETAIL. If the SHIPMENT UNIT DETAIL is invoked by the SHIPMENTS UNITS IN CAROUSEL it will return to it, otherwise it will return to the DSS MENU System.

PARAMETER CHANGES

Add the HOLD TIME IN CAROUSEL and CAROUSEL RELEASE COUNT data elements to the D001195 parameter record.

3.2.12 **M2.DFD**

Process ID #	Date
M2.DFD	November 1, 1996

Requirement ID #(s)
SECS-RC11

Data Flow Diagram

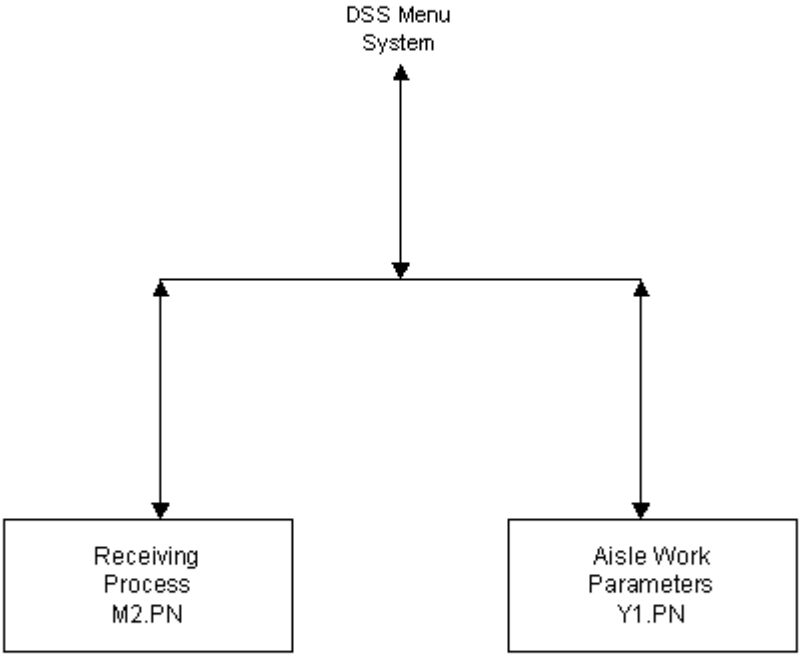

3.2.12.1 M2.PN - Receipt Induction Process

Process Name	Process ID #	Date
Receipt Induction Process	M2.PN	November 1, 1996

Requirements ID #(s)
SECS-RC11

Process Narrative

Program WM21 is accessed from the DSS Menu System, when "RECEIPT INDUCTION PROCESS" is invoked. Up to six (6) "TYPE RECEIPT" lines, read from a User controlled parameter table, will be displayed on the screen. The operator will select the type of receipt being processed which will direct the tote(s) to the proper destination.

If it is ESD type material, enter 'Y' in "ESD REQUIRED" field to confirm presence of Electronic Sensitive Device Equipment. This indicator may also be used to route a designated receipt to a specific "grounded" destination.

A PCN entry is required ("PCN/PICK BAR CODE") if Type Receipt is of a specific type such as Rewarehousing, Replenishment,

Up to four (4) tote entries are available to route receipt:

(1) If the shipment will all fit in one tote, enter up to four (4) tote entries as needed: "TOTE BAR CODE", "TOTE2", "TOTE3", "TOTE4", and set Multitote Indicator ("MULTITOTE") to 'Y'.

(2) If more than one (1) tote is needed, enter up to four (4) tote entries as needed: "TOTE BAR CODE", "TOTE2", "TOTE3", "TOTE4", and set Multitote Indicator ("MULTITOTE") to 'Y'.

ECS Receipt Parameter Load & Maintain Program, WM22, will utilize Screen WM22 to provide the capability to add, change, or delete "TYPE RECEIPT" lines with corresponding description and destination values, and provide an updated listing on the screen of current parameter values prior to and after completion of each update transaction.

3.2.13 **M3.DFD**

Process ID #	Date
M3.DFD	November 1, 1996

Requirement ID #(s)
SECS-RC7.4, RC12

Data Flow Diagram

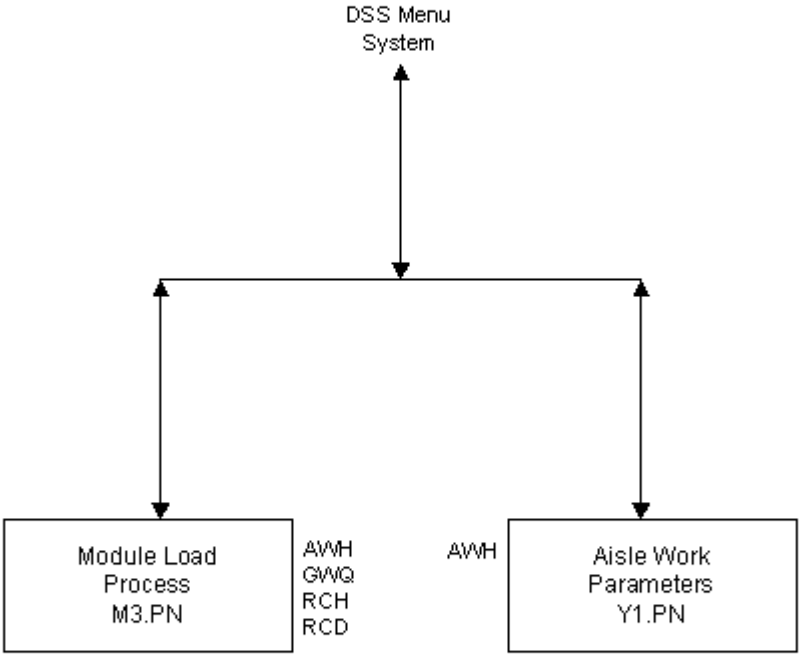

3.2.13.1 M3.PN - Module Load

Process Name	Process ID #	Date
Module Load	M3.PN	November 1, 1996

Requirements ID #(s)
SECS-RC7.4, RC12

Process Narrative

This process is accessed from the DSS Menu System. It will allow an operator to:

Load a Module, Send Module to Storage, Request Empty Module.
If Authorized, Enter Queue Management Function.

If a queue is ready for Module Load, the screen will accept a module number, and store an RCH record, that will be used by the Stow Process, when the module arrives at the Hi-Rise. This process will select PCNs from the queue, and send an SMM to ECS for each PCN, requesting the totes be transferred from the receiving carousel to the module load station.

As the totes arrive, the operator scans the tote-IDs, and places the material into the module, in the following order:

When the operator scans the tote-ID, this process will store an RCD record, for use by the Stow Process, and delete the GWQ record that is no longer needed.

The operator continues scanning tote-IDs, and loading them into the module. Once all PCNs have been loaded, the operator will be prompted, "Module Complete?". 'Y' will complete the module build, and request an AGV to remove the module from the stand.

Normally, the operator will then request an empty module by pressing F6 if there are more queues ready for Module Load.

3.2.13.1.1 M31.PN - Module Load

Process Name	Process ID #	Date
Module Load	M3.PN	November 1, 1996

Requirements ID #(s)
SECS-RC7.4, RC12

Process Narrative

When a queue is complete, either by reaching the limit of totes or by use of the Carousel Queue Management screen, this process will request the PCNs from the carousel in the special order required, so that the Hi-Rise operator can unload the module in a predictable order, known as Hi-Lo Banding.

This process orders the stows to start at Box Level 21, Section 001, moving vertically in Section 001 to Box Level 40, then traversing horizontally to Section 002 then descending to Box Level 21.

This process interleaves stows for Box and Rack rows. That is, if there are stows for Box and Rack of the same Section and Level, they will be loaded on the module adjacent to each other.

3.2.14 **X.DFD**

Process ID #	Date
X.DFD	November 1,1996
Requirement ID #(s)	
SECS-RC7, SECS-RC7.1	

Data Flow Diagram

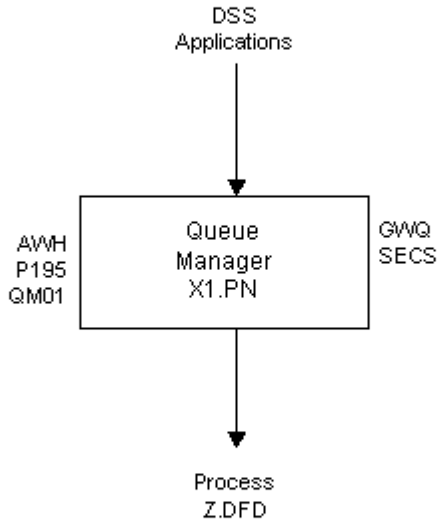

3.2.14.1 X1.PN - Queue Manager

Process Name	Process ID #	Date
Queue Manager	X1.PN	December 8, 1995

Requirements ID #(s)
SECS-RC7, SECS-RC.7.1

Process Narrative

This process is the interface between DSS and the ECS Communication process Z2. The online processes of DSS format a Standard Move Message (SMM) and link to this process. The process accesses a CICS queue containing the aisles of the Ministackers or storage carousels. If the aisle of the location is in the queue, the process stores the SMM in the General Work Queue (GWQ). The process writes the SMM to the SECS transmission queue.

The process will move the destination field to the source field when processing receipts before adding the SMM to the GWQ.

If the SMM is a stow, the process builds the retrieve location by using the destination field; otherwise it uses the source field. If required, the process converts the retrieve location to the bar-coded Tray ID.

If the process detects an "R" in the SMM type field, indicating an RF operation for a Ministacker or storage carousel aisle, the process will assume that the Ministacker or storage carousel will be operated in a back up mode. It determines if it can delete the Aisle Work Queue (AWQ) by reading the first record of the AWQ. If the number of associated workstations is one (1), the process deletes all queued SMMs in the aisle work queue.

3.2.15 **F.DFD**

Process ID #	Date
F.DFD - Tote Conveyor Subcontroller	November 6, 1997

Requirement ID #(s)

SECS-RC1.1, SECS-RC1.1.10, SECS-RC1.2, SECS-RC1.3, SECS-RC1.4, SECS-RC2.11, SECS-RC3.1, SECS-RC4.2, SECS-RC4.3, SECS-RC5, SECS-RC12.4

Data Flow Diagram

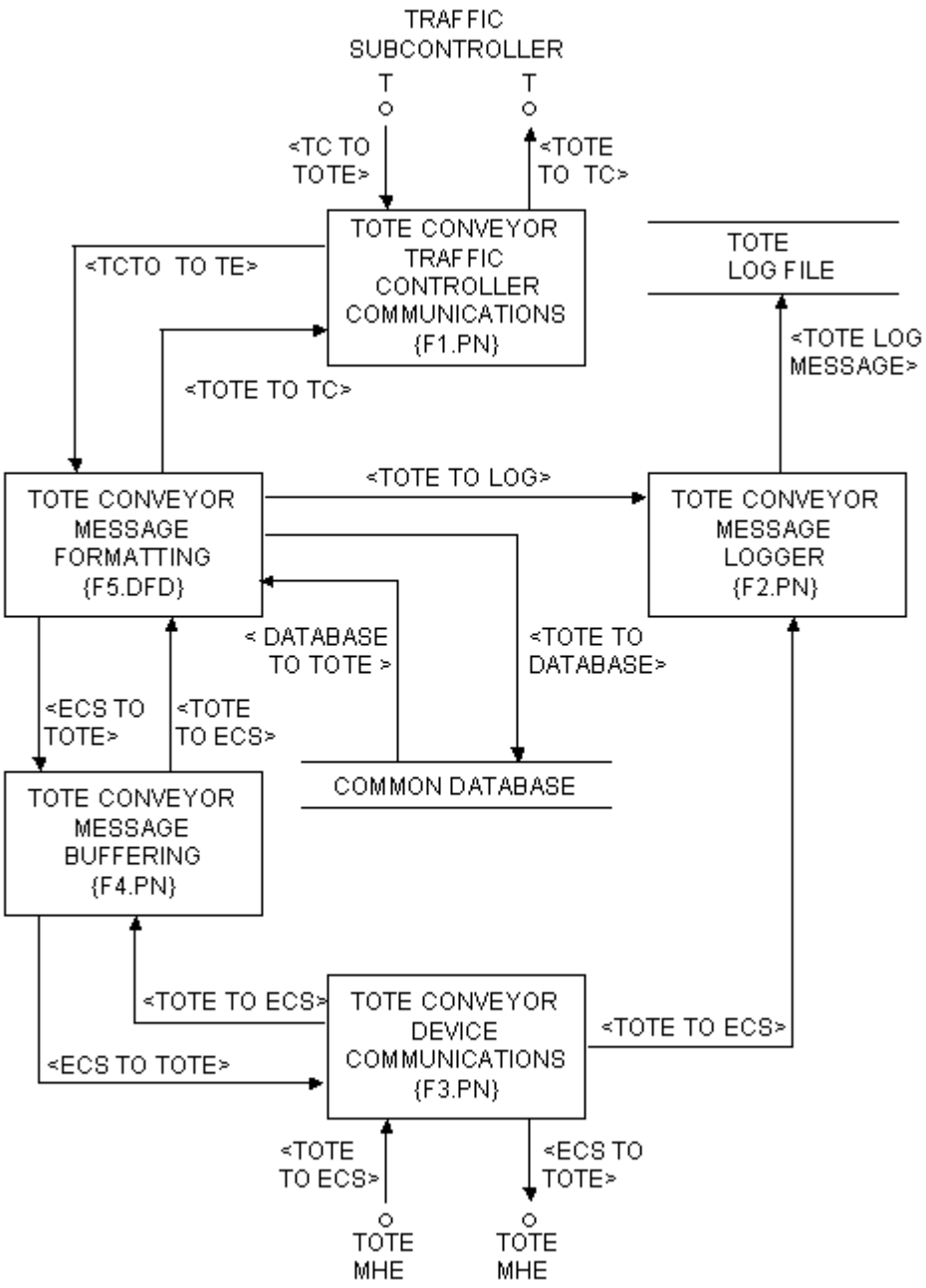

3.2.15.1 F1.PN - Tote Conveyor Traffic Controller Communications

Process Name	Process ID #	Date
Tote Conveyor Traffic Controller Communications	F1.PN	November 6, 1997

Requirement ID #(s)

SECS-RC1.1, SECS-RC1.1.10, SECS-RC1.2, SECS-RC1.3, SECS-RC1.4, SECS-RC2.11, SECS-RC3.1, SECS-RC12.4

Process Narrative

This process receives messages from the Traffic Controller (T.DFD) and passes them onto the Tote Conveyor Message Formatting (F5.DFD) process. This process also receives response and status messages from the Tote Conveyor Message Formatting (F5.DFD) process and sends them to the Traffic Controller (T.DFD). This process handles all message transfer protocols and handshaking between the Traffic Controller (T.DFD) and the subcontroller (F.DFD) as well as the message transmission.

3.2.15.2 F2.PN - Tote Conveyor Message Logger

Process Name	Process ID #	Date
Tote Conveyor Message Logger	F2.PN	November 6, 1997

Requirement ID #(s)
SECS-RC1.1, SECS-RC1.1.10, SECS-RC4.2, SECS-RC4.3

Process Narrative

This process receives messages from the Tote Conveyor Message Formatting (F5.DFD) process and the Tote Conveyor Device Communications (T3.PN) process. If logging is enabled, this process will log all user messages to a log file. This process also logs all error messages, regardless of whether or not logging is enabled.

3.2.15.3 F3.PN - Tote Conveyor Device Communications

Process Name	Process ID #	Date
Tote Conveyor Device Communications	F3.PN	November 6, 1997

Requirement ID #(s)

SECS-RC1.1, SECS-RC1.1.10, SECS-RC1.2, SECS-RC1.3, SECS-RC1.4, SECS-RC5

Process Narrative

This process receives messages from the Tote Conveyor Message Buffering (F4.PN) process and transmits them to the Tote Conveyor Controller (F.DFD). This process receives acknowledgments and status responses from the Tote Conveyor (PLC) and forwards them to the Tote Conveyor Message Buffering (F4.PN) process for further processing. This process sends device messages to the Tote Conveyor Message Logger (F2.PN) process for logging. This process handles all transfer protocols and handshaking required by the device communications.

3.2.15.4 F4.PN - Tote Conveyor Message Buffering

Process Name	Process ID #	Date
Tote Conveyor Message Buffering	F4.PN	November 6, 1997

Requirement ID #(s)

SECS-RC1.1, SECS-RC1.1.10, SECS-RC4.2, SECS-RC4.3

Process Narrative

This process will receive messages from the Tote Conveyor Message Formatting (F5.DFD) process and the Tote Conveyor Device Communications (F3.PN) process and insert and extract the messages to and from their respective memory buffers.

3.2.15.5 F5.DFD

Process ID #	Date
F5.DFD - Tote Conveyor Message Formatting	November 6, 1997

Requirement ID #(s)

SECS-RC1.1, SECS-RC1.1.10, SECS-RC1.2, SECS-RC1.3, SECS-RC1.4, SECS-RC2.3, SECS-RC2.5, SECS-RC2.6, SECS-RC2.11, SECS-RC3.1, SECS-RC4.2, SECS-RC4.3, SECS-RC5

Data Flow Diagram

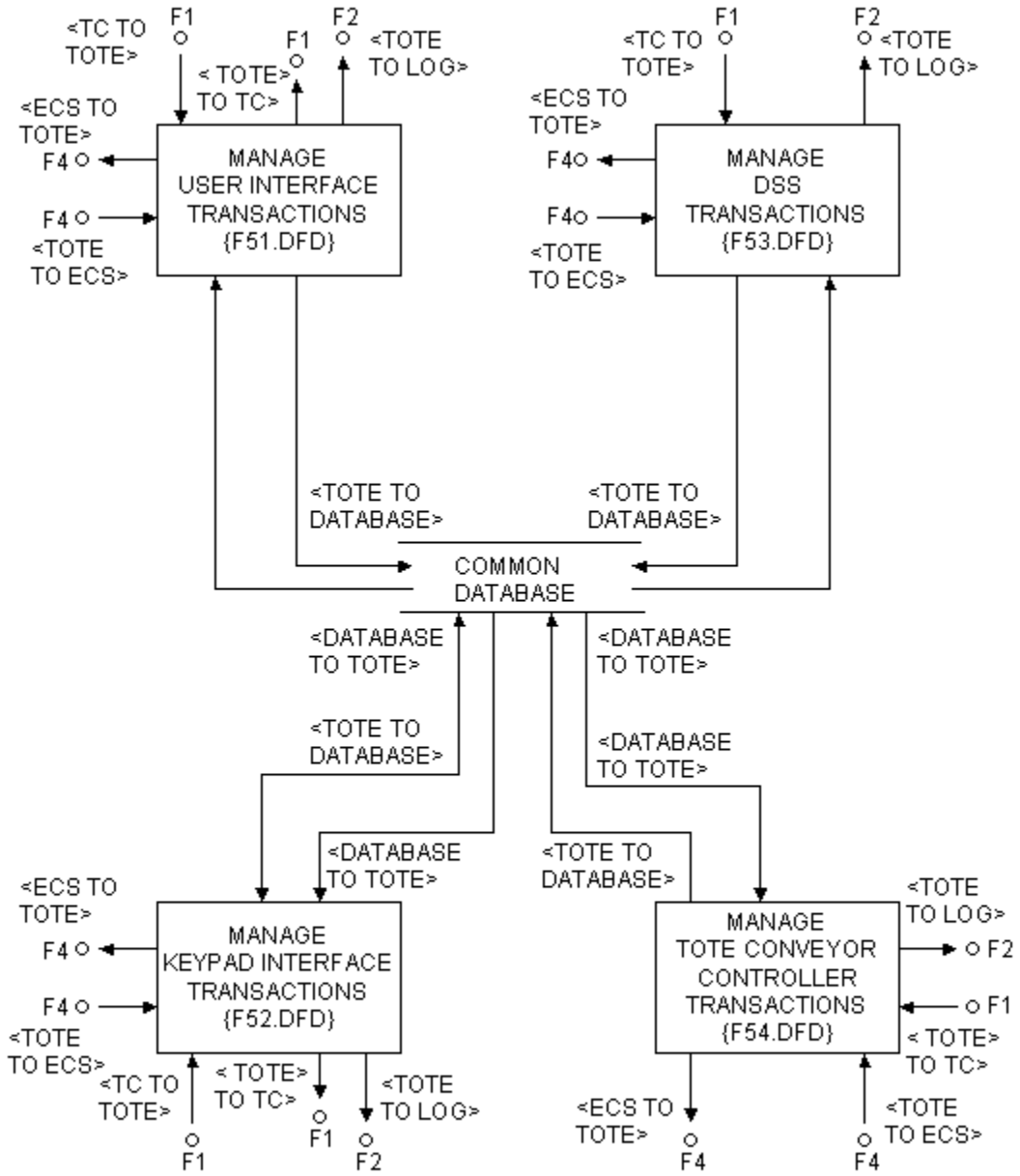

3.2.15.5.1 **F51.DFD**

Process ID #	Date
F51.DFD - Manage User Interface Transactions Page 1 of 2	November 6, 1997

Requirement ID #(s)

SECS-RC1.1, SECS-RC1.1.10, SECS-RC1.2, SECS-R C1.3, SECS-RC1.4, SECS-RC2.3, SECS-RC2.5, SECS-RC2.6, SECS-RC3.1, SECS-RC4.2, SECS-RC4.3, SECS-RC5

Data Flow Diagram

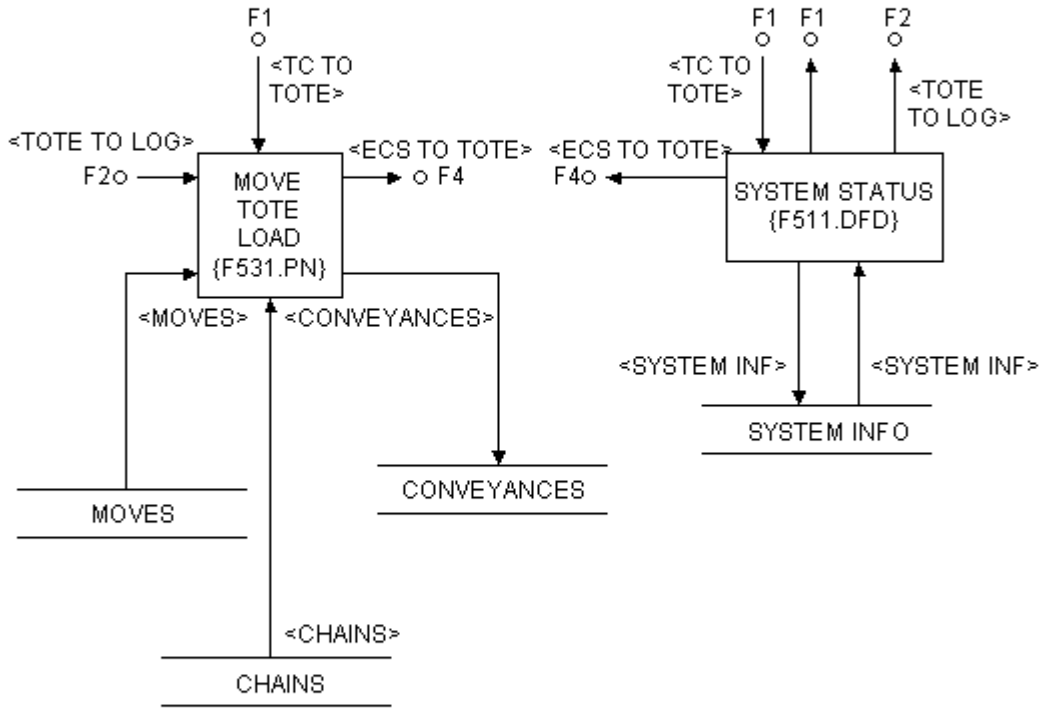

Process ID #	Date
F51.DFD Manage User Interface Transactions Page 2 of 2	November 6, 1997

Requirement ID #(s)

SECS-RC1.1, SECS-RC1.1.10, SECS-RC1.2, SECS-RC1.3, SECS-RC1.4, SECS-RC2.3, SECS-RC2.5, SECS-RC2.6, SECS-RC3.1, SECS-RC4.2, SECS-RC4.3, SECS-RC5

Data Flow Diagram

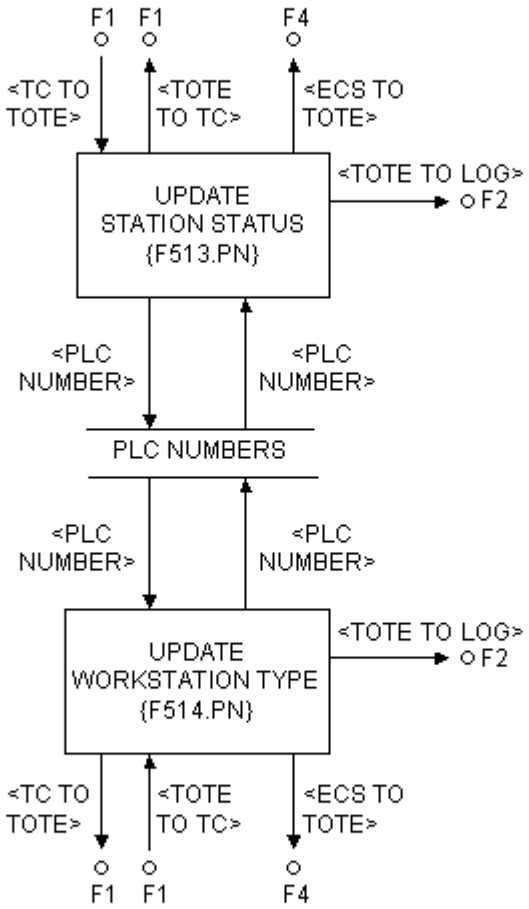

3.2.15.5.1.1 **F511.DFD**

Process ID #	Date
F511.DFD - System Status	November 6, 1997

Requirement ID #(s)

SECS-RC1.1, SECS-RC1.1.10, SECS-RC1.2, SECS-RC1.3, SECS-RC1.4, SECS-RC2.5, SECS-RC2.6, SECS-RC3.1, SECS-RC4.2, SECS-RC4.3, SECS-RC5

Data Flow Diagram

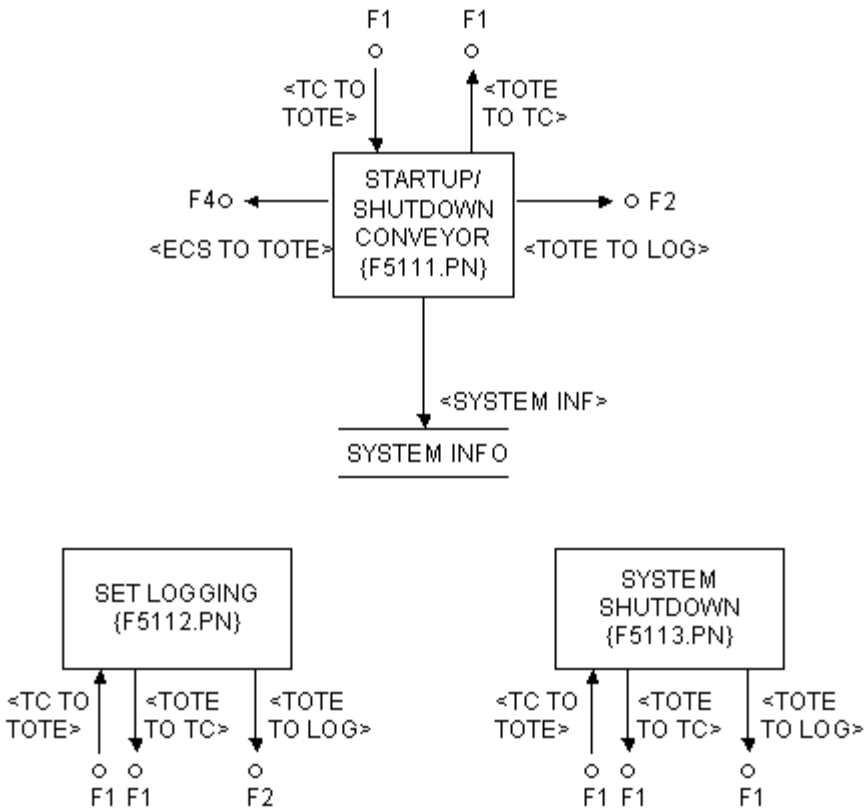

3.2.15.5.1.1.1 **F5111.PN - Startup/Shutdown Conveyor**

Process Name	Process ID #	Date
Startup/Shutdown Conveyor	F5111.PN	November 6, 1997

Requirement ID #(s)
SECS-RC1.1, SECS-RC1.1.10, SECS-RC1.2, SECS-RC2.6

Process Narrative

This process accepts a User Interface request (A01) from the Tote Conveyor Traffic Controller Communications (F1.PN) process to either startup or shutdown the Tote Conveyor PLCs. This process will format a message (08) and send it to the Tote Conveyor Message Buffering (F4.PN) process to be forwarded to the Tote Conveyor PLCs. If invalid data was received, an error message is formatted and sent to the Tote Conveyor Traffic Controller Communications (F1.PN) process. This process sends formatted messages to the Tote Conveyor Message Logger (F2.PN) process for possible logging.

3.2.15.5.1.1.2 **F5112.PN - Set Logging**

Process Name	Process ID #	Date
Set Logging	F5112.PN	November 6, 1997

Requirement ID #(s)

SECS-RC1.1, SECS-RC1.1.10, SECS-RC2.5, SECS-RC4.3

Process Narrative

This process accepts a User Interface request (A07) from the Tote Conveyor Traffic Controller Communications (F1.PN) process to turn logging either on or off. If invalid data was received, an error message is formatted and sent to the Tote Conveyor Traffic Controller Communications (F1.PN) process. This process sends formatted messages to the Tote Conveyor Message Logger (F2.PN) process for possible logging.

3.2.15.5.1.1.3 **F5113.PN - System Shutdown (Software)**

Process Name	Process ID #	Date
System Shutdown (Software)	F5113.PN	November 6, 1997

Requirement ID #(s)
SECS-RC1.1, SECS-RC1.1.10, SECS-RC2.6

Process Narrative

This process accepts a User Interface request (A09) from the Tote Conveyor Traffic Controller Communications (F1.PN) process to set a flag to shutdown the Tote Conveyor Subcontroller. If invalid data was received, an error message is formatted and sent to the Tote Conveyor Traffic Controller Communications (F1.PN) process. This process sends formatted messages to the Tote Conveyor Message Logger (F2.PN) process for possible logging.

3.2.15.5.1.2 **F513.PN - Update Station Status**

Process Name	Process ID #	Date
Update Station Status	F513.PN	November 6, 1997

Requirement ID #(s)
SECS-RC1.1, SECS-RC1.1.10, SECS-RC2.11

Process Narrative

This process accepts an Update Station Status request (J73) from the Tote Conveyor Traffic Controller (F1.PN). Upon receiving the message, this process will format a message (04) and send it to the Tote Conveyor Message Buffering (F4.PN) process to be forward to the Tote Conveyor PLC. If invalid data was received, an error message is formatted and sent to the Tote Conveyor Traffic Controller Communications (F1.PN) process. This process sends formatted messages to the Tote Conveyor Message Logger (F2.PN) process for possible logging.

The task performed by this process is to update 'PLC Numbers' based on operator input. This allows a supervisor to set workstations active or inactive as workloads change. The new lane statuses for the requested area are recorded in 'PLC Numbers'.

3.2.15.5.1.3 **F514.PN - Update Workstation Type**

Process Name	Process ID #	Date
Update Workstation Type	F514.PN	November 6, 1997

Requirement ID #(s)
SECS-RC1.1, SECS-RC1.1.10, SECS-RC2.11

Process Narrative

This process accepts an Update Workstation Type request (J75) from the Tote Conveyor Traffic Controller (F1.PN). Upon receiving the message, this process will format a message (07) and send it to the Tote Conveyor Message Buffering (F4.PN) process to be forwarded to the Tote Conveyor PLC. If invalid data was received, an error message is formatted and sent to the Tote Conveyor Traffic Controller Communications (F1.PN) process. This process sends formatted messages to the Tote Conveyor Message Logger (F2.PN) process for possible logging.

The task performed by this process is to update 'PLC Numbers' based on the inspection lane type entered by the operator. The possible lane types are Random Inspection, Retrograde Inspection, New Procurement Inspection, and Depot Property Inspection. The new lane type configuration is recorded in 'PLC Numbers', and the information is then sent to the Tote Device Communications (F4.PN) process.

3.2.15.5.2 **F52.DFD**

Process ID #	Date
F52.DFD - Manage Keypad Interface Transactions	November 6, 1997

Requirement ID #(s)
SECS-RC1.1, SECS-RC1.1.10, SECS-RC12.4

Data Flow Diagram

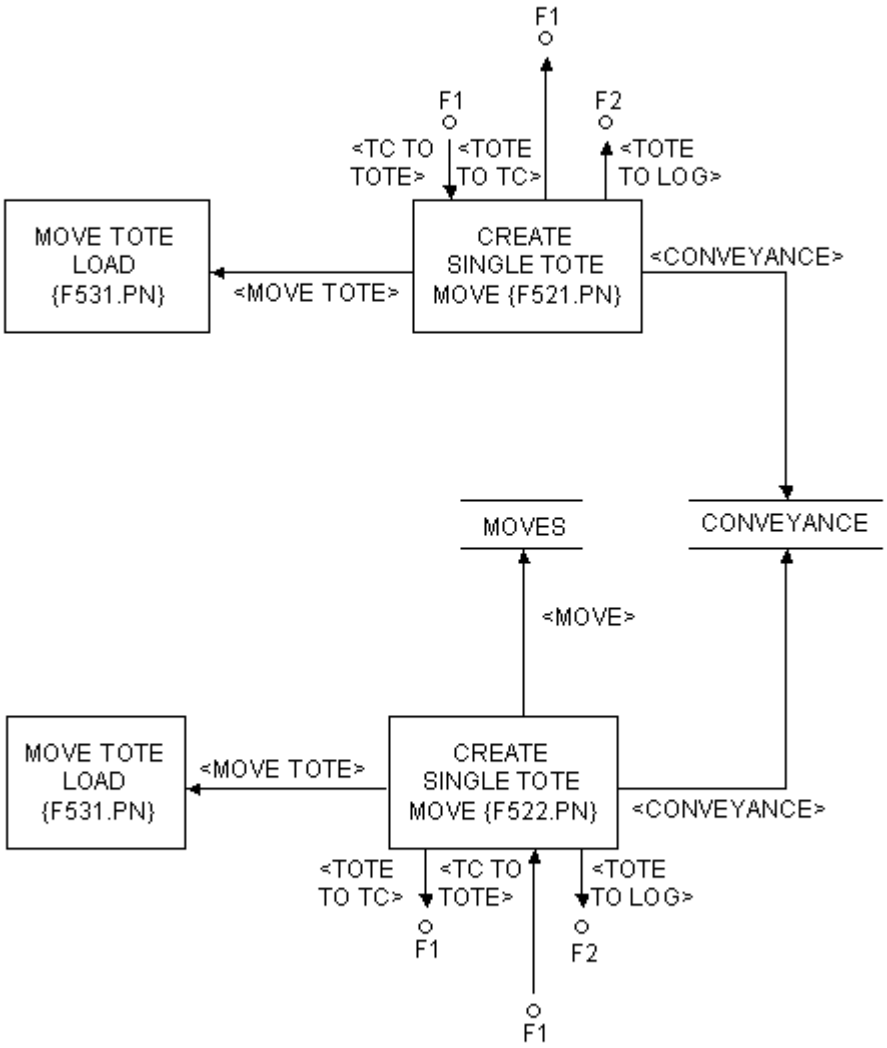

3.2.15.5.2.1 **F521.PN - Create Single Tote Move**

Process Name	Process ID #	Date
Create Single Tote Move	F521.PN	November 6, 1997

Requirement ID #(s)
SECS-RC1.1, SECS-RC1.1.10, SECS-RC12.4

Process Narrative

This process receives a Create Single Tote Move (M01) message from the Tote Conveyor Traffic Controller Communications (F1.PN) process. This message comes as a result of the keypad conversation Create Single Tote Move. Prior to sending the M01, the Keypad Subcontroller (K.DFD) has received the necessary information to create a move, and has validated the information. However, if invalid information is received, an error message is formatted and sent to the Tote Conveyor Traffic Controller Communications (F1.PN) process. This process will also send formatted messages to the Tote Conveyor Message Logger (F2.PN) process for possible logging. The process will then store the new move in 'Conveyances' and send information to the Move Tote Load (F531.PN) process to move the tote.

3.2.15.5.2.2 **F522.PN - Initiate Single Tote Move**

Process Name	Process ID #	Date
Initiate Single Tote Move	F522.PN	November 6, 1997

Requirement ID #(s)
SECS-RC1.1, SECS-RC1.1.10, SECS-RC12.4

Process Narrative

This process receives an Initiate Single Tote Move (M01) message from the Tote Conveyor Traffic Controller Communications (F1.PN) process. This message comes as a result of the keypad conversation Initiate Single Tote Move. Prior to sending the M01, the Keypad Subcontroller (K.DFD) has received the necessary information to create a move, and has validated the information. However, if invalid information is received, an error message is formatted and sent to the Tote Conveyor Traffic Controller Communications (F1.PN) process. This process will also send formatted messages to the Tote Conveyor Message Logger (F2.PN) process for possible logging. The process will then store the new move in the 'Conveyances' and 'Moves' records, and a request is made to the Move Tote Load (F531.PN) process to move the tote.

3.2.15.5.3 **F53.DFD**

Process ID #	Date
F53.DFD - Manage DSS Transactions	November 6, 1997

Requirement ID #(s)

SECS-RC1.1, SECS-RC1.1.10, SECS-RC1.2, SECS-RC1.3, SECS-RC1.4

Data Flow Diagram

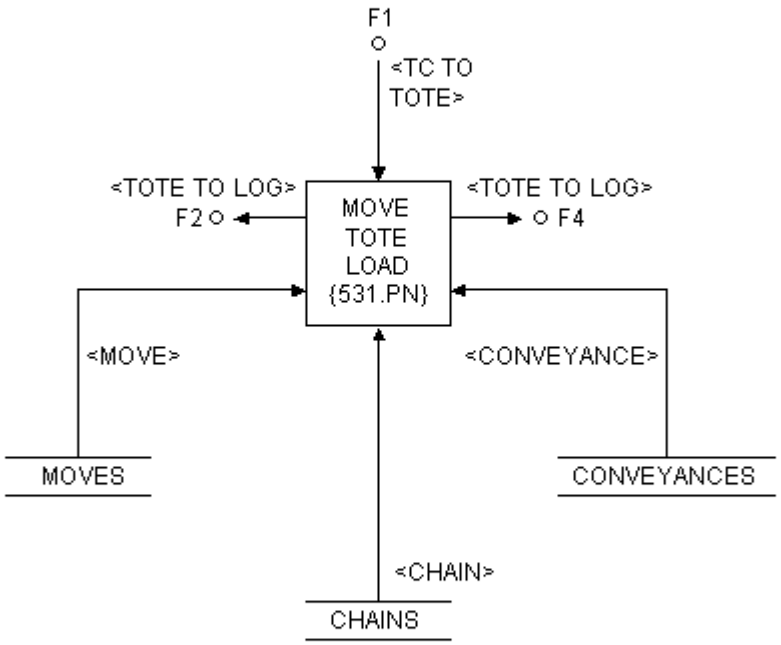

3.2.15.5.3.1 **F531.PN - Move Tote Load**

Process Name	Process ID #	Date
Move Tote Load	F531.PN	November 6, 1997

Requirement ID #(s)

SECS-RC1.1, SECS-RC1.1.10, SECS-RC1.2, SECS-RC1.3, SECS-RC1.4, SECS-RC2.11, SECS-RC12.4

Process Narrative

Requests coming to this process can come from either the Upper Tier (SMM) or User Interface (M01) through the Tote Conveyor Traffic Controller Communications (F1.PN) process, or through various processes that handle keypad interface requests. These internal tote processes are Create Single Tote Move (F521.PN), Initiate Single Tote Move (F522.PN), or Create Chained Tote Move (F523.PN). The tote conveyor destination is obtained and the move is initiated through a New Tote Move message (01) or the destination is modified through a Modify Destination message (02). The proper message is formatted and sent to the Tote Conveyor Message Buffering Process (F4.PN). This process sends formatted messages to the Tote Conveyor Message Logger (F2.PN) process for possible logging.

3.2.15.5.4 **F54.DFD**

Process ID #	Date
F54.DFD - Manage Tote Conveyor Controller Transactions	November 6, 1997

Requirement ID #(s)

SECS-RC1.1, SECS-RC1.1.10, SECS-RC1.2, SECS-RC1.3, SECS-RC1.4, SECS-RC3.1, SECS-RC4.2, SECS-RC4.3, SECS-RC5

Data Flow Diagram

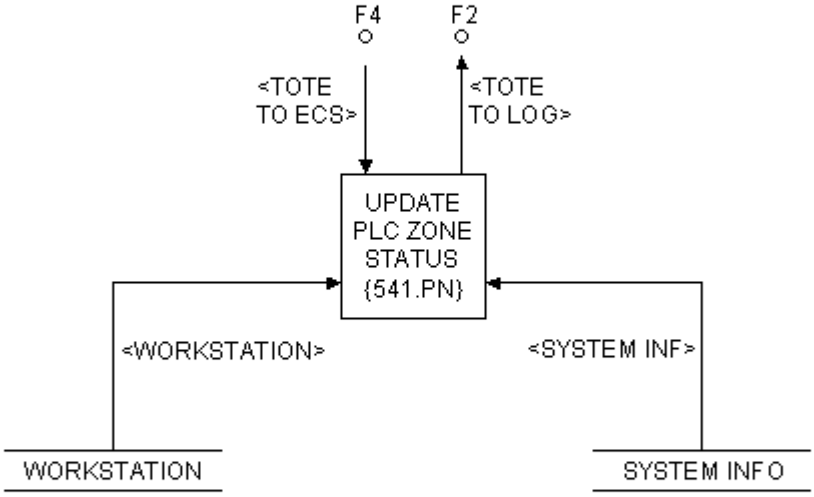

3.2.15.5.4.1 **F541.PN - Update PLC Zone Status**

Process Name	Process ID #	Date
Update PLC Zone Status	F541.PN	November 6, 1997

Requirement ID #(s)

SECS-RC1.1, SECS-RC1.1.10, SECS-RC1.2, SECS-RC1.3, SECS-RC1.4, SECS-RC3.1, SECS-RC4.2, SECS-RC4.3, SECS-RC5

Process Narrative

This process accepts an Update PLC Zone Status message (09) from the Tote Conveyor Message Buffering (F4.PN) process that is sent from the Tote Conveyor PLC. This message updates ‘Workstations’ to reflect the PLC zone status change. The possible modes are ‘1’ for automatic mode, ‘2’ for semi-automatic mode, ‘3’ for manual mode, ‘4’ for a startup acknowledgment, and ‘5’ for a shutdown acknowledgment. Modes ‘4’ and ‘5’ are sent in response to a 08-type message. The process then sends a formatted message to the Tote Conveyor Message Logger (F2.PN) process for possible logging.

3.2.16 **W.DFD**

Process ID #	Date
W.DFD - Pallet Conveyor Subcontroller	November 6, 1997

Requirement ID #(s)

SECS-RC1.1, SECS-RC1.1.10, SECS-RC1.2, SECS-RC1.3, SECS-RC1.4, SECS-RC2.11, SECS-RC3.1, SECS-RC4.2, SECS-RC4.3, SECS-RC5, SECS-RC12.4

Data Flow Diagram

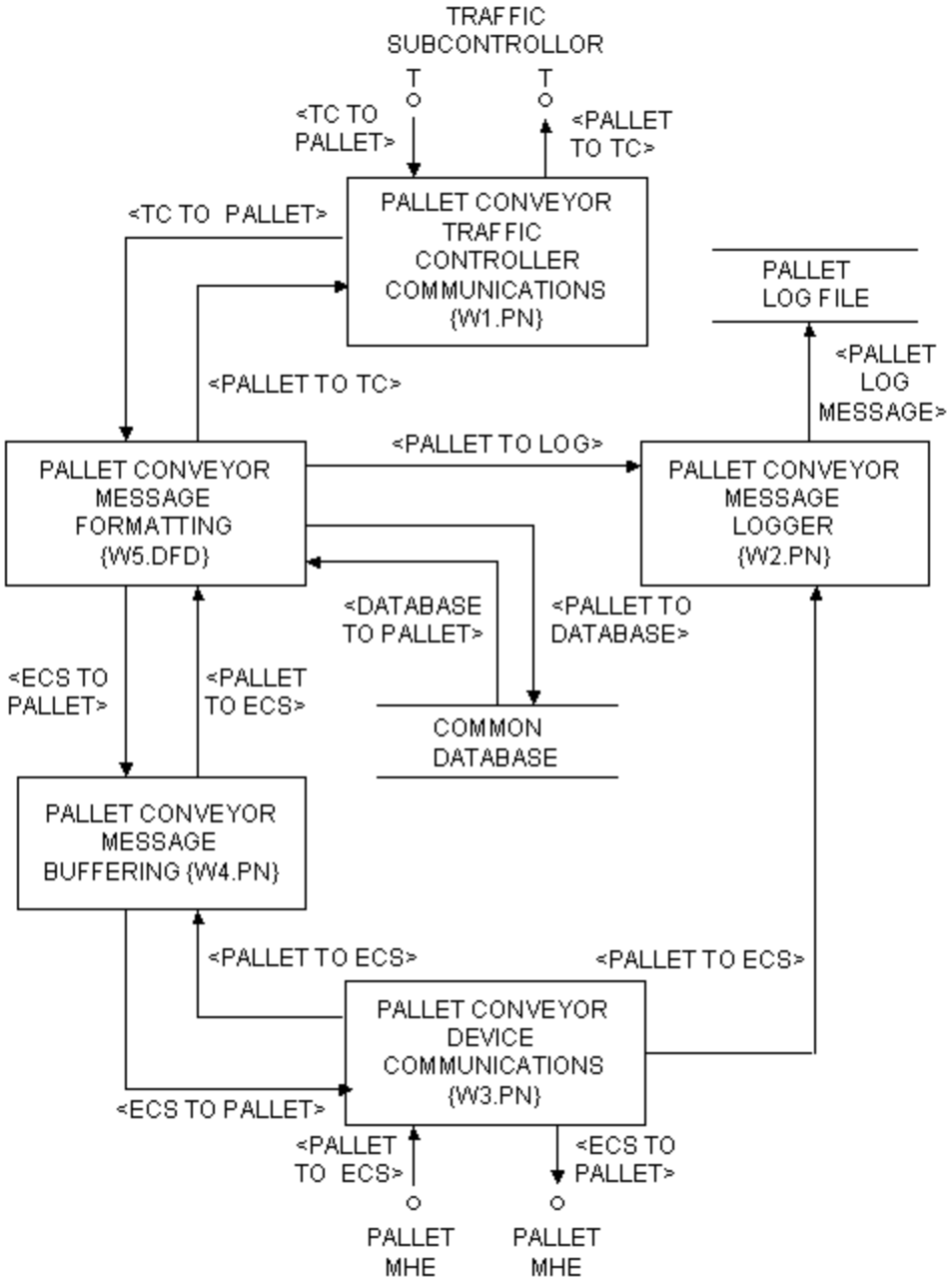

3.2.16.1 W1.PN - Pallet Conveyor Traffic Controller Communications

Process Name	Process ID #	Date
Pallet Conveyor Traffic Controller Communications	W1.PN	November 6, 1997

Requirement ID #(s)

SECS-RC1.1, SECS-RC1.1.10, SECS-RC1.2, SECS-RC1.3, SECS-RC1.4, SECS-RC2.11, SECS-RC3.1, SECS-RC12.4

Data Flow Diagram

This process receives messages from the Traffic Controller (T.DFD) and passes them onto the Pallet Conveyor Controller Message Formatting (W5.DFD) process. This process also receives response and status messages from the Pallet Conveyor Message Formatting (W5.DFD) process and sends them to the Traffic Controller (T.DFD). This process handles all message transfer protocols and handshaking between the Traffic Controller (T.DFD) and the subcontroller (W.DFD) as well as the message transmission.

3.2.16.2 W2.PN - Pallet Conveyor Message Logger

Process Name	Process ID #	Date
Pallet Conveyor Message Logger	W2.PN	November 6, 1997

Requirement ID

SECS-RC1.1, SECS-RC1.1.10, SECS-RC4.2, SECS-RC4.3

Data Flow Diagram

This process receives messages from the Pallet Conveyor Message Formatting (W5.DFD) process and the Pallet Conveyor Device Communications (W3.PN) process. If logging is enabled, this process will log all user messages to a log file. This process also logs all error messages, regardless of whether or not logging is enabled.

3.2.16.3 W3.PN - Pallet Conveyor Device Communications

Process Name	Process ID #	Date
Pallet Conveyor Device Communications	W3.PN	November 6, 1997

Requirement ID #(s)

SECS-RC1.1, SECS-RC1.1.10, SECS-RC1.2, SECS-RC1.3, SECS-RC1.4, SECS-RC5

Data Flow Diagram

This process receives messages from the Pallet Conveyor Message Buffering (W4.PN) process and transmits them to the Pallet Conveyor Controller (W.DFD). This process receives acknowledgments and status responses from the Pallet Conveyor (PLC) and forwards them to the Pallet Conveyor Message Buffering (W4.PN) process for further processing. This process sends device messages to the Pallet Conveyor Message Logger (W2.PN) process for logging. This process handles all transfer protocols and handshaking required by the device communications.

3.2.16.4 W4.PN - Pallet Conveyor Message Buffering

Process Name	Process ID #	Date
Pallet Conveyor Message Buffering	W4.PN	November 6, 1997

Requirement ID #(s)
SECS-RC1.1, SECS-RC1.1.10, SECS-RC4.2, SECS-RC4.3

Data Flow Diagram

This process will receive messages from the Pallet Conveyor Message Formatting (W5.DFD) process and the Pallet Conveyor Device Communications (W3.PN) process and insert and extract the messages to and from their respective queues.

3.2.16.5 **W5.DFD**

Process ID #	Date
W5.DFD - Pallet Conveyor Message Formatting	November 6, 1997

Requirement ID #(s)

SECS-RC1.1, SECS-RC1.1.10, SECS-RC1.2, SECS-RC1.3, SECS-RC1.4, SECS-RC2.3, SECS-RC2.5, SECS-RC2.6, SECS-RC2.11, SECS-RC3.1, SECS-RC4.2, SECS-RC4.3, SECS-RC5

Data Flow Diagram

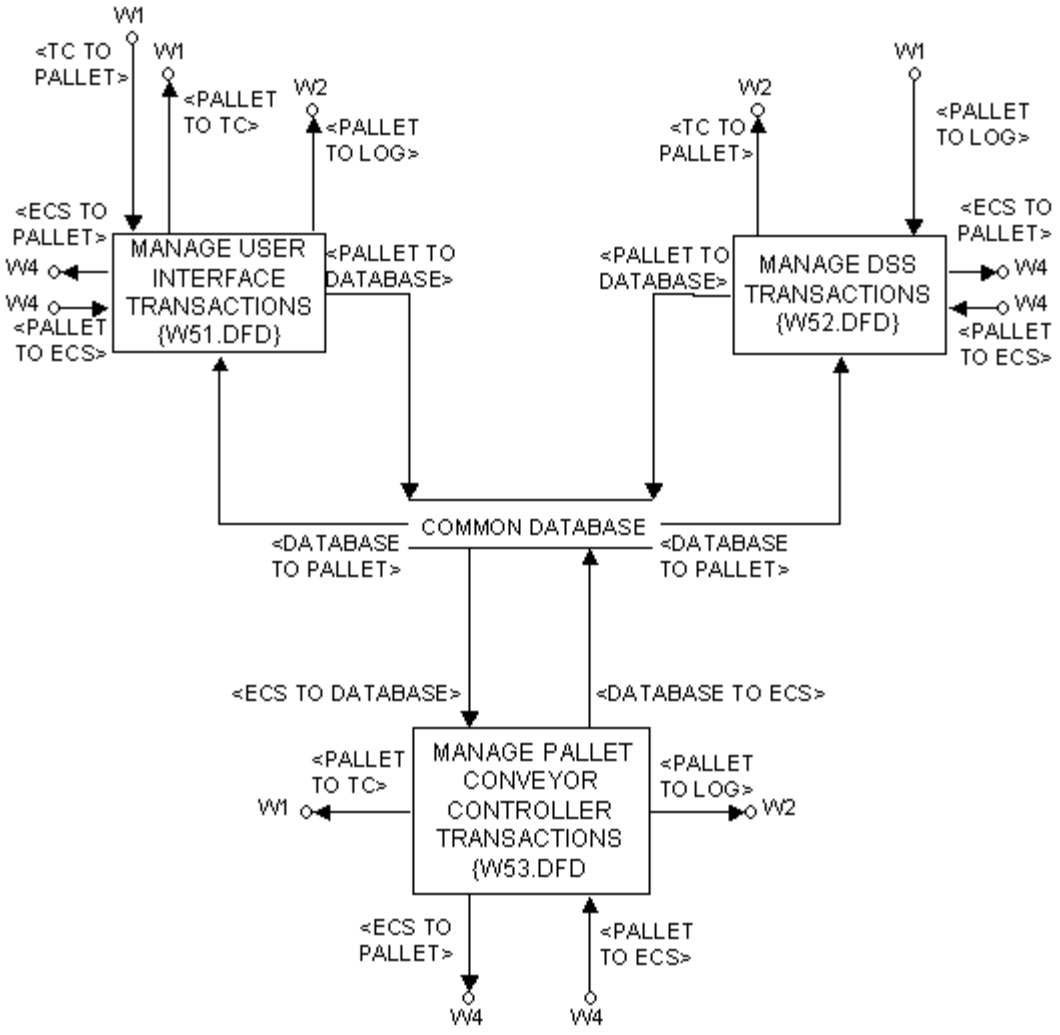

3.2.16.5.1 **W51.DFD**

Process ID #	Date
W51.DFD - Manage User Interface Transactions	November 6, 1997

Requirement ID #(s)

SECS-RC1.1, SECS-RC1.1.10, SECS-RC1.2, SECS-RC1.3, SECS-RC1.4, SECS-RC2.3, SECS-RC2.5, SECS-RC2.6, SECS-RC3.1, SECS-RC4.2, SECS-RC4.3, SECS-RC5

Data Flow Diagram

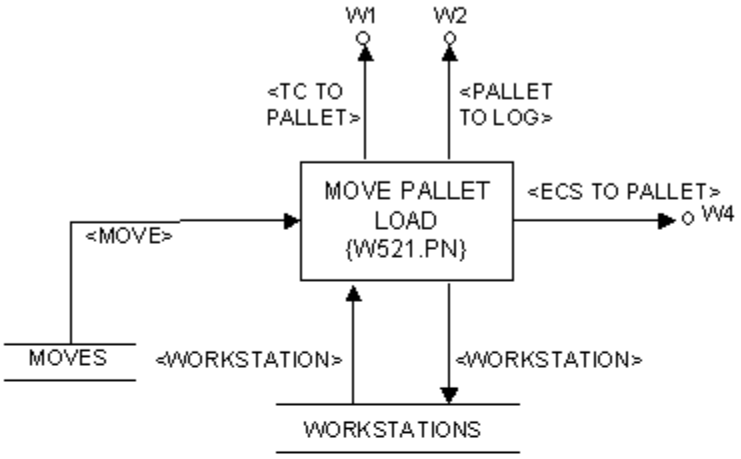

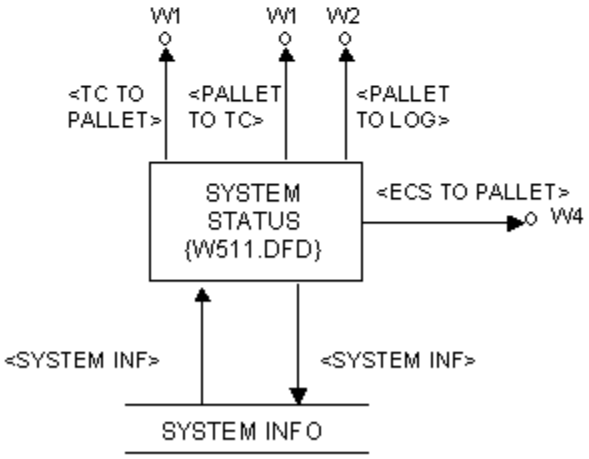

3.2.16.5.1.1 **W511.DFD**

Process ID #	Date
W511.DFD - System Status	November 6, 1997

Requirement ID #(s)

SECS-RC1.1, SECS-RC1.1.10, SECS-RC1.2, SECS-RC1.3, SECS-RC1.4, SECS-RC2.5, SECS-RC2.6, SECS-RC3.1, SECS-RC4.2, SECS-RC4.3, SECS-RC5

Data Flow Diagram

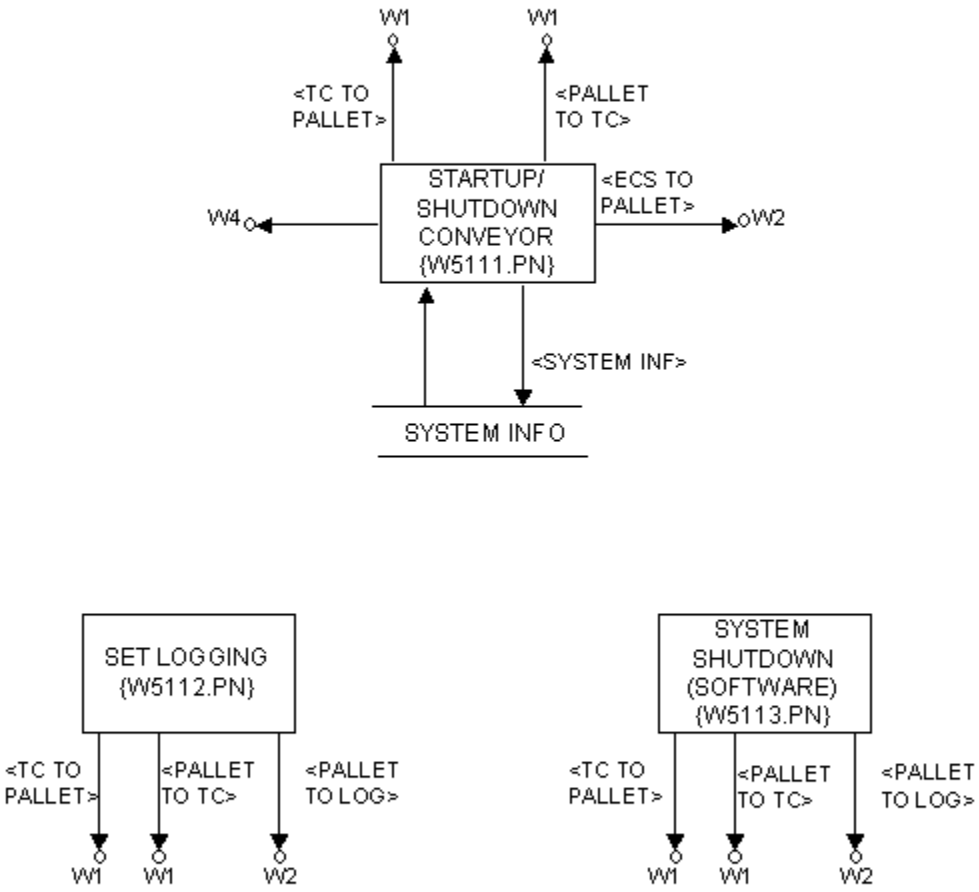

3.2.16.5.1.1.1 **W5111.PN - Startup/Shutdown Conveyor**

Process Name	Process ID #	Date
Startup/Shutdown Conveyor	W5111.PN	November 6, 1997

Requirement ID #(s)
SECS-RC1.1, SECS-RC1.1.10, SECS-RC1.2, SECS-RC2.6

Process Narrative

This process accepts a User Interface request (A01) from the Pallet Conveyor Traffic Controller Communications (W1.PN) process to either startup or shutdown the Pallet Conveyor PLCs. This process will format a message (08) and send it to the Pallet Conveyor Message Buffering (W4.PN) process to be forwarded to the Pallet Conveyor PLCs. If invalid data was received, an error message is formatted and sent to the Pallet Conveyor Traffic Controller Communications (W1.PN) process. This process sends formatted messages to the Pallet Conveyor Message Logger (W2.PN) process for possible logging.

3.2.16.5.1.1.2 **W5112.PN - Set Logging**

Process Name	Process ID #	Date
Set Logging	W5112.PN	November 6, 1997

Requirement ID #(s)
SECS-RC1.1, SECS-RC1.1.10, SECS-RC2.5, SECS-RC4.3

Process Narrative

This process accepts a User Interface request (A07) from the Pallet Conveyor Traffic Controller Communications (W1.PN) process to turn logging either on or off. If invalid data was received, an error message is formatted and sent to the Pallet Conveyor Traffic Controller Communications (W1.PN) process. This process sends formatted messages to the Pallet Conveyor Message Logger (W2.PN) process for possible logging.

3.2.16.5.1.1.3 **W5113.PN - System Shutdown (Software)**

Process Name	Process ID #	Date
System Shutdown (Software)	W5113.PN	November 6, 1997

Requirement ID #(s)
SECS-RC1.1, SECS-RC1.1.10, SECS-RC2.6

Process Narrative

This process accepts a User Interface request (A09) from the Pallet Conveyor Traffic Controller Communications (W1.PN) process to set a flag to shutdown the Pallet Conveyor Subcontroller. If invalid data was received, an error message is formatted and sent to the Pallet Conveyor Traffic Controller Communications (W1.PN) process. This process sends formatted messages to the Pallet Conveyor Message Logger (W2.PN) process for possible logging.

3.2.16.6 **W52.DFD**

Process ID #	Date
W52.DFD - Manage DSS Transactions	November 6, 1997

Requirement ID #(s)

SECS-RC1.1, SECS-RC1.1.10, SECS-RC1.2, SECS-RC1.3, SECS-RC1.4

Data Flow Diagram

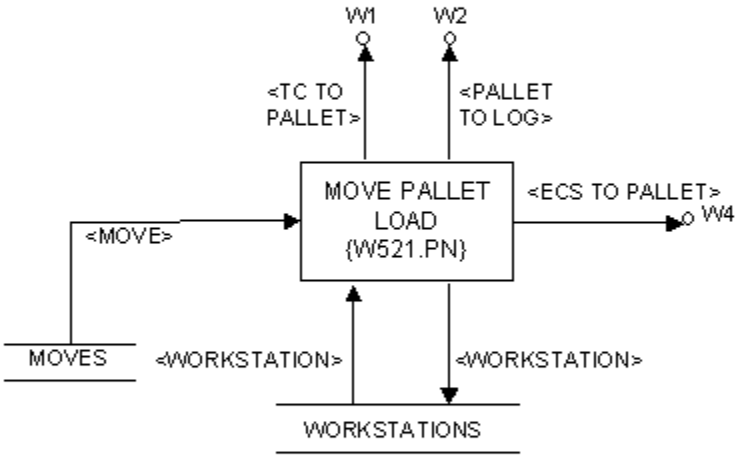

3.2.16.6.1 W521.PN - Move Pallet Load

Process Name	Process ID #	Date
Move Pallet Load	W521.PN	November 6, 1997

Requirement ID #(s)
SECS-RC1.1, SECS-RC1.1.10, SECS-RC1.2, SECS-RC1.3, SECS-RC1.4

Process Narrative

This process accepts a message from either the Process Load Present (W533.PN) process or from the Pallet Conveyor Traffic Controller (W1.PN). This process will send a formatted message to the Pallet Conveyor Message Logger (W2.PN) for possible logging.

The request to move a pallet may or may not have a Control Number associated with it. If there is a Control Number in the 'Workstations' record, movement is initiated by passing a Pallet Move message (12) to the PLC through the Pallet Conveyor Message Buffering (W4.PN) process. If there is not a Control Number, the load present message is either ignored or else recorded in 'Workstations' (depending on the area).

When the request for a move comes from the Towline Subcontroller (L.DFD) via the Pallet Conveyor Traffic Controller (W1.PN), if a load present has been recorded at the workstation, the Pallet Move message is sent to initiate the move. If the load present has not been recorded, the Control Number is put in 'Workstations'.

3.2.16.7 **W53.DFD**

Process ID #	Date
W53.DFD - Manage Pallet Conveyor Controller Transactions Page 1 of 2	November 6, 1997

Requirement ID #(s)

SECS-RC1.1, SECS-RC1.1.10, SECS-RC1.2, SECS-RC1.3, SECS-RC1.4, SECS-RC3.1, SECS-RC4.2, SECS-RC4.3, SECS-RC5

Data Flow Diagram

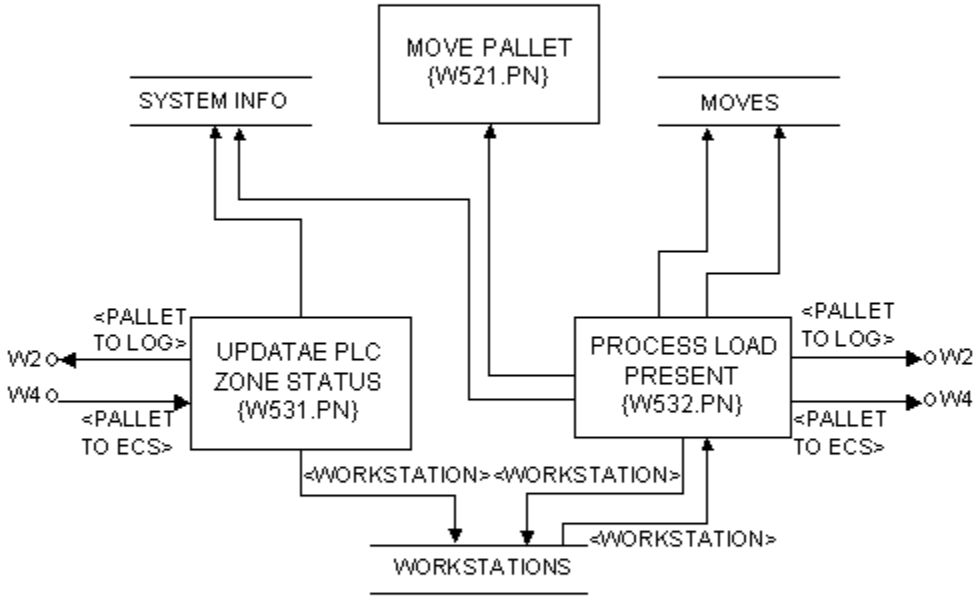

Process ID #	Date
W53.DFD - Manage Pallet Conveyor Controller Transactions Page 2 of 2	November 6, 1997

Requirement ID #(s)

SECS-RC1.1, SECS-RC1.1.10, SECS-RC1.2, SECS-RC1.3, SECS-RC1.4, SECS-RC3.1, SECS-RC4.2, SECS-RC4.3, SECS-RC5

Data Flow Diagram

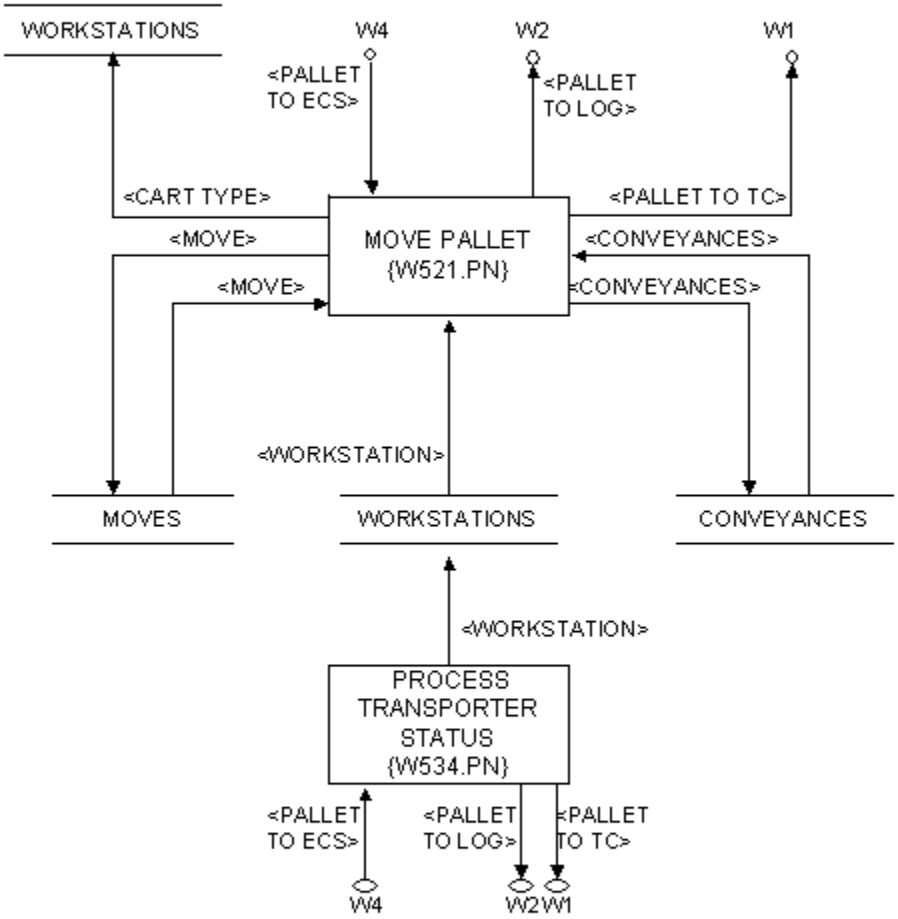

3.2.16.7.1 W531.PN - Update PLC Zone Status

Process Name	Process ID #	Date
Update PLC Zone Status	W531.PN	November 6, 1997

Requirement ID #(s)

SECS-RC1.1, SECS-RC1.1.10, SECS-RC1.2, SECS-RC1.3, SECS-RC1.4, SECS-RC3.1, SECS-RC4.2, SECS-RC4.3, SECS-RC5

Process Narrative

This process accepts an Update PLC Zone Status message (09) from the Pallet Conveyor Message Buffering (W4.PN) process, which is sent from the Pallet Conveyor PLC. This message updates ‘Workstations’ to reflect the PLC zone status change. The possible modes are: ‘1’ for automatic mode, ‘2’ for semi-automatic mode, ‘3’ for manual mode, ‘4’ for a startup acknowledgment, and ‘5’ for a shutdown acknowledgment. Modes ‘4’ and ‘5’ are sent in response to a 08-type message. The process then sends a formatted message to the Pallet Conveyor Message Logger (W2.PN) process for possible logging.

3.2.16.7.2 W532.PN - Process Load Present

Process Name	Process ID #	Date
Process Load Present	W532.PN	November 6, 1997

Requirement ID #(s)

SECS-RC1.1, SECS-RC1.1.10, SECS-RC1.2, SECS-RC1.3, SECS-RC1.4, SECS-RC3.1, SECS-RC4.2, SECS-RC4.3, SECS-RC5

Process Narrative

This process receives a Pallet Conveyor PLC message (11) from the Pallet Conveyor Message Buffering (W4.PN) process. A message is then formatted and sent to the Pallet Conveyor Message Logger (W2.PN) for possible logging.

The task performed at this process is dependent upon the location of the load. If the load present is from the M/H Pack turntable, 'Workstations' is updated to decrement the count on the input pallet conveyor. If the load present is at a towline unloader station, and if preceding processes have deposited the material control number in the workstation, this process requests that the Move Pallet Load (W52.PN) process moves the load. If the load present is at the Intradepot South Unloader, this process deletes the move record and stores the control number and destination in memory.

3.2.16.7.3 W533.PN - Process Pallet Arrival

Process Name	Process ID #	Date
Process Pallet Arrival	W533.PN	November 6, 1997

Requirement ID #(s)

SECS-RC1.1, SECS-RC1.1.10, SECS-RC1.2, SECS-RC1.3, SECS-RC1.4, SECS-RC3.1, SECS-RC4.2, SECS-RC4.3, SECS-RC5

Process Narrative

This process updates several database files as a result of receiving the Pallet Conveyor PLC message (13) from the Pallet Conveyor Message Buffering (W4.PN) process. When the transaction is received, this process reads the 'Moves' record to validate the arrival destination. For successful arrivals, this process updates or deletes the 'Moves' record.

The process is handled in differing ways depending upon the location at which it arrives. If the arrival is at an automatic loader, this process determines if there is an empty cart already at the loader. If so, a request is made to the Towline Subcontroller to move the cart. If this is a normal load, the request is made to the Start Move (L531.PN) process by sending the M01 message to the Pallet Conveyor Traffic Controller Communications (W1.PN) process. If it is a special load such as pallets, the request to move the cart is made to Empty Cart Management (L5322.DFD) by sending the M01 message to the Pallet Conveyor Traffic Controller Communications (W1.PN) process. If the arrival is at an aisle in rack or bin storage, the 'Moves' record is updated to indicate that the material has arrived and is in position for storage.

This process will also send a formatted message to the Pallet Conveyor Message Logger (W2.PN) process for possible logging.

3.2.16.7.4 W534.PN - Process Transporter Status

Process Name	Process ID #	Date
Process Transporter Status	W534.PN	November 6, 1997

Requirement ID #(s)

SECS-RC1.1, SECS-RC1.1.10, SECS-RC1.2, SECS-RC1.3, SECS-RC1.4, SECS-RC3.1, SECS-RC4.2, SECS-RC4.3, SECS-RC5

Process Narrative

This process receives a Pallet Conveyor PLC message (14) from the Pallet Conveyor Message Buffering (W4.PN) process. A message is then formatted and sent to the Pallet Conveyor Message Logger (W2.PN) for possible logging.

The task performed at this process is to change the inbound or outbound status of the reversible pallet conveyors at Intradepot Receiving. When the message is received, the 'Workstations' information is updated with the new information.

3.2.17 **B.DFD**

Process ID #	Date
B.DFD	November 6, 1997

Requirement ID #(s)
SECS-RC1.1.9

Data Flow Diagram

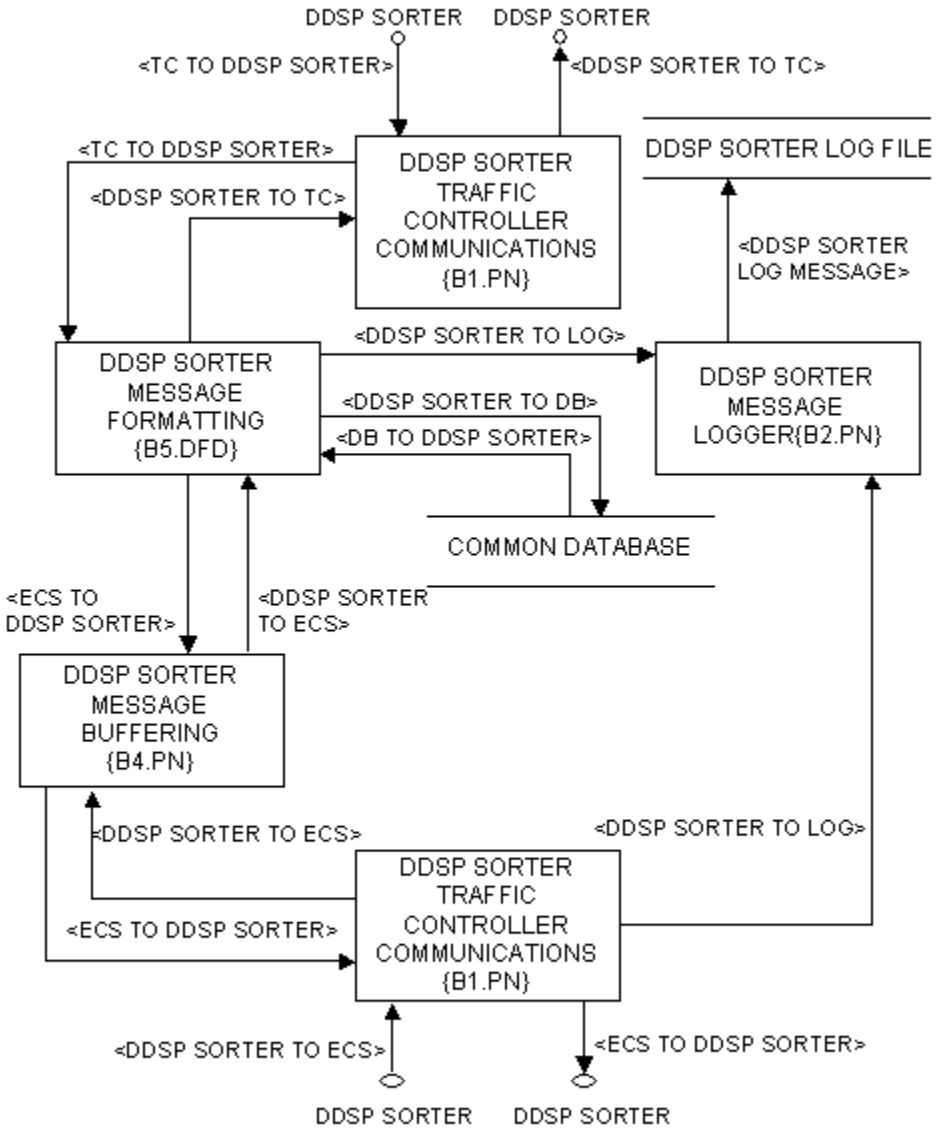

3.2.17.1 B1.PN - Sorter Traffic Controller Communications

Process Name	Process ID #	Date
Sorter Traffic Controller Communications	B1.PN	November 6, 1997

Requirement ID #(s)
SECS-RC1.1.9

Process Narrative

This process receives messages from the Traffic Controller (T.DFD) and passes them to the Sorter Message Formatting (B5.PN) process. This process receives response and status messages from the Sorter Message Formatting (B5.PN) process and sends them to the Traffic Controller (T.DFD). This process handles all message transfer protocols and handshaking between the Traffic Controller (T.DFD) and the subcontroller (B.DFD).

3.2.17.2 B2.PN - Sorter Message Logger

Process Name	Process ID #	Date
Sorter Message Logger	B2.PN	November 6, 1997

Requirement ID #(s)
SECS-RC1.1.9

Process Narrative

This process receives messages from the Sorter Message Formatting (B5.PN) process and the Sorter Device Communications (B3.PN) process and logs messages to the Sorter Log File if logging is enabled.

3.2.17.3 B3.PN - Communications

Process Name	Process ID #	Date
Sorter Device Communications	B3.PN	November 6, 1997

Requirement ID #(s)
SECS-RC1.1.9

Process Narrative

This process receives messages from the Sorter Message Buffering (B4.PN) process and transmits them to the Sorter Controller (B.DFD). This process receives acknowledgments and status responses from the Sorter Controller (B.DFD) and forwards them to the Sorter Message Buffering (B4.PN) process for further processing. This process sends Sorter to ECS messages to the Sorter Message Logger (B2.PN) process for logging. This process handles all transfer protocols and handshaking required by the device communications.

3.2.17.4 B4.PN - Sorter Message Buffering

Process Name	Process ID #	Date
Sorter Message Buffering	B4.PN	November 6, 1997

Requirement ID #(s)
SECS-RC1.1.9

Process Narrative

This process will receive messages from the Sorter Message Formatting (B5.PN) process, insert messages into its memory buffer, extract messages out of its memory buffer, and send these messages to the Sorter Device Communications (B3.PN) process. This process will receive messages from the Sorter Device Communications (B3.PN) process, insert messages into its memory buffer, extract messages out of its memory buffer, and send these messages to the Sorter Device Communications.

3.2.17.5 B5.PN - Sorter Message Formatting

Process Name	Process ID #	Date
Sorter Message Formatting	B5.PN	November 6, 1997

Requirement ID #(s)
SECS-RC1.1.9

Process Narrative

This process receives messages from the Sorter Traffic Controller Communications Process (B1.PN) and formats them for transmission to the New Cumberland Sorter. This process sends Sorter to Log messages to the Sorter Message Logger Process (B2.PN) for logging. This process also receives messages from the Sorter Message Buffering Process (B4.PN) and forwards them to the Sorter Traffic Controller Communications Process (B1.PN) for transmission to the Traffic Controller (T.DFD).

3.2.18 **L.DFD**

Process ID #	Date
L.DFD - Towline Subcontroller	November 6, 1997

Requirement ID #(s)

SECS-RC1.1, SECS-RC1.1.10, SECS-RC1.2, SECS-RC1.3, SECS-RC1.4, SECS-RC2.11, SECS-RC3.1, SECS-RC4.2, SECS-RC4.3, SECS-RC5, SECS-RC12.4

Data Flow Diagram

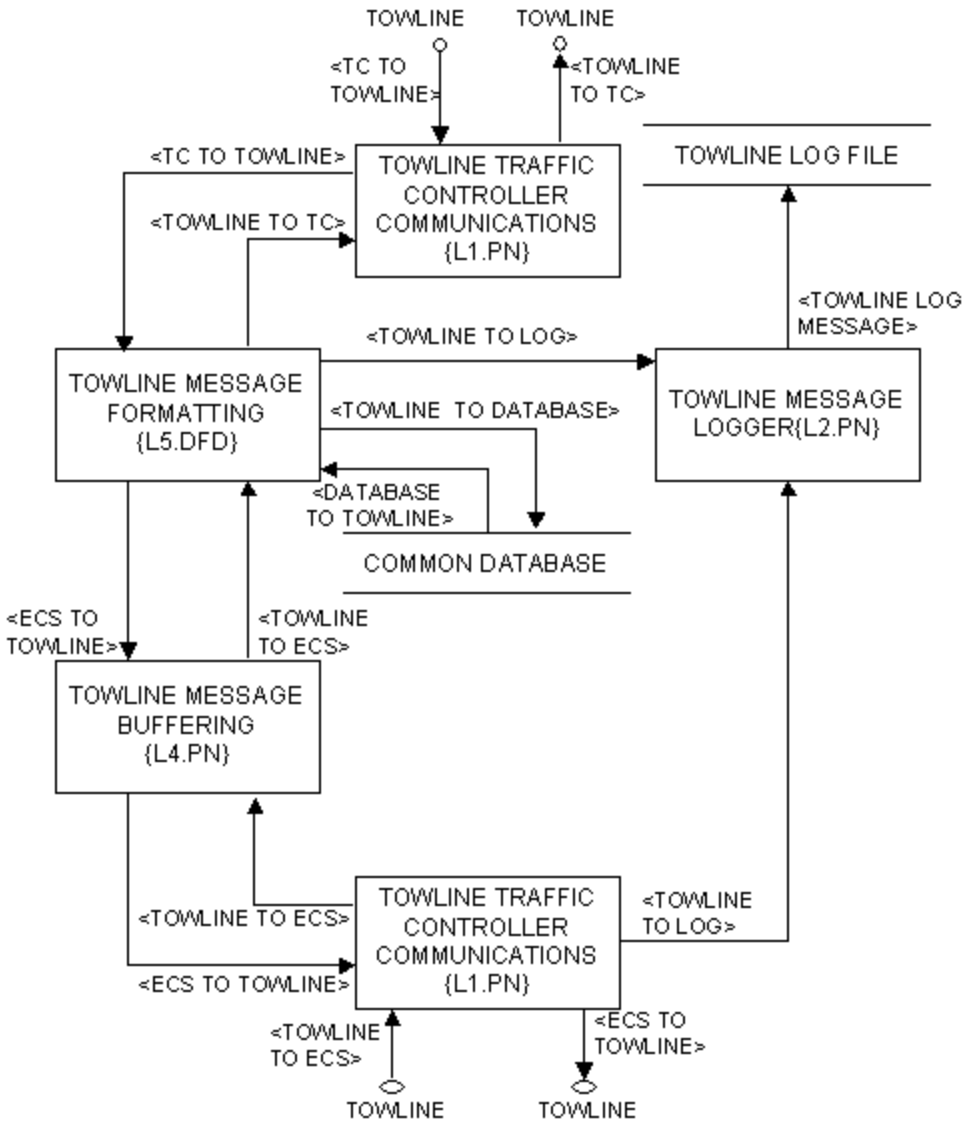

3.2.18.1 L1.PN - Towline Traffic Controller Communications

Process Name	Process ID #	Date
Towline Traffic Controller Communications	L1.PN	November 6, 1997

Requirement ID #(s)

SECS-RC1.1, SECS-RC1.1.10, SECS-RC1.2, SECS-RC1.3, SECS-RC1.4, SECS-RC2.11, SECS-RC3.1, SECS-RC12.4

Process Narrative

This process receives messages from the Traffic Controller (T.DFD) and passes them onto the Towline Message Formatting Processing (L5.DFD). This process receives response and status messages from the Towline Message Formatting Processing (L5.DFD) and sends them to the Traffic Controller (T.DFD). This process handles all message transfer protocols and handshaking between the Traffic Controller (T.DFD) and the Towline Subcontroller (L.DFD).

3.2.18.2 L2.PN - Towline Message Logger

Process Name	Process ID #	Date
Towline Message Logger	L2.PN	November 6, 1997

Requirement ID #(s)
SECS-RC1.1, SECS-RC1.1.10, SECS-RC4.2, SECS-RC4.3

Process Narrative

This process receives messages from the Towline Message Formatting (L5.DFD) process and the Towline Device Communications (L3.PN) process and logs messages to the Towline Log File if logging is enabled.

3.2.18.3 L3.PN - Towline Device Communications

Process Name	Process ID #	Date
Towline Device Communications	L3.PN	November 6, 1997

Requirement ID #(s)

SECS-RC1.1, SECS-RC1.1.10, SECS-RC1.2, SECS-RC1.3, SECS-RC1.4, SECS-RC5

Process Narrative

This process receives messages from the Towline Message Buffering (L4.PN) process and transmits them to the Towline Controller (L.DFD). This process receives acknowledgments and status responses from the Towline Controller (L.DFD) and forwards them to the Towline message Buffering (L4.PN) process for further processing. This process sends device messages to the Towline Message Logger (L2.PN) process for logging. This process handles all transfer protocols and handshaking required by the device communications.

3.2.18.4 L4.PN - Towline Message Buffering

Process Name	Process ID #	Date
Towline Message Buffering	L4.PN	November 6, 1997

Requirement ID #(s)
SECS-RC1.1, SECS-RC1.1.10, SECS-RC4.2, SECS-RC4.3

Process Narrative

This process will receive ECS TO TOWLINE messages from the Towline Message Formatting (L5.DFD) process and buffer the messages prior to forwarding these ECS TO TOWLINE messages to the Towline Device Communications (L3.PN) process.

In addition, this process will receive TOWLINE TO ECS messages from the Towline Device Communications (L3.PN) process and buffer the messages prior to forwarding the TOWLINE TO ECS messages to the Towline Message Formatting (L5.DFD) process.

3.2.18.5 **L5.DFD**

Process ID #	Date
L5.DFD - Towline Message Formatting Page 1 of 2	November 6, 1997

Requirement ID #(s)

SECS-RC1.1, SECS-RC1.1.10, SECS-RC1.2, SECS-RC1.3, SECS-RC1.4, SECS-RC2.3, SECS-RC2.5, SECS-RC2.6, SECS-RC2.11, SECS-RC3.1, SECS-RC4.2, SECS-RC4.3, SECS-RC5

Data Flow Diagram

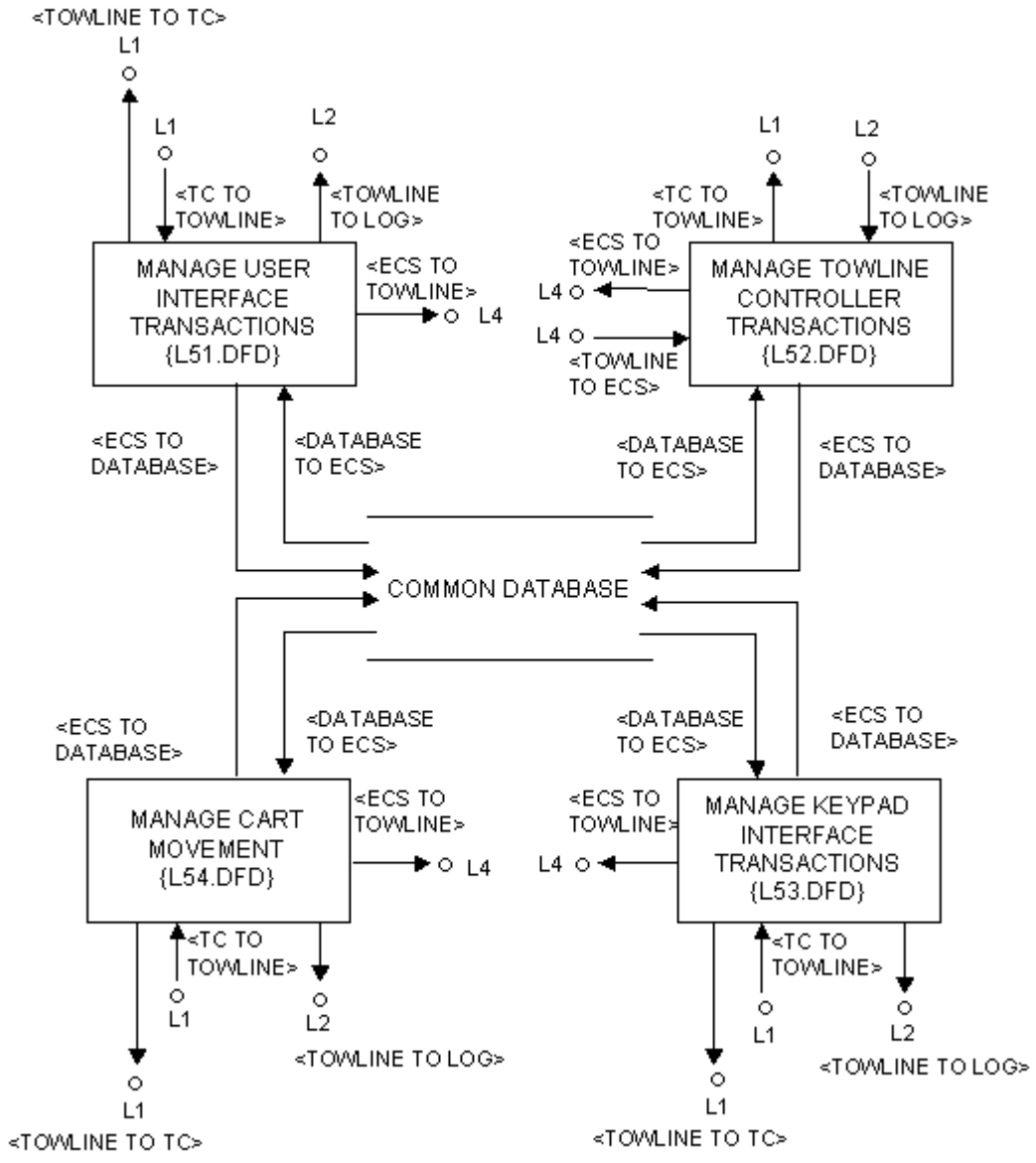

Process ID #	Date
L5.DFD - Towline Message Formatting Page 2 of 2	November 6, 1997

Requirement ID #(s)

SECS-RC1.1, SECS-RC1.1.10, SECS-RC1.2, SECS-RC1.3, SECS-RC1.4, SECS-RC2.3, SECS-RC2.5, SECS-RC2.6, SECS-RC2.11, SECS-RC3.1, SECS-RC4.2, SECS-RC4.3, SECS-RC5

Data Flow Diagram

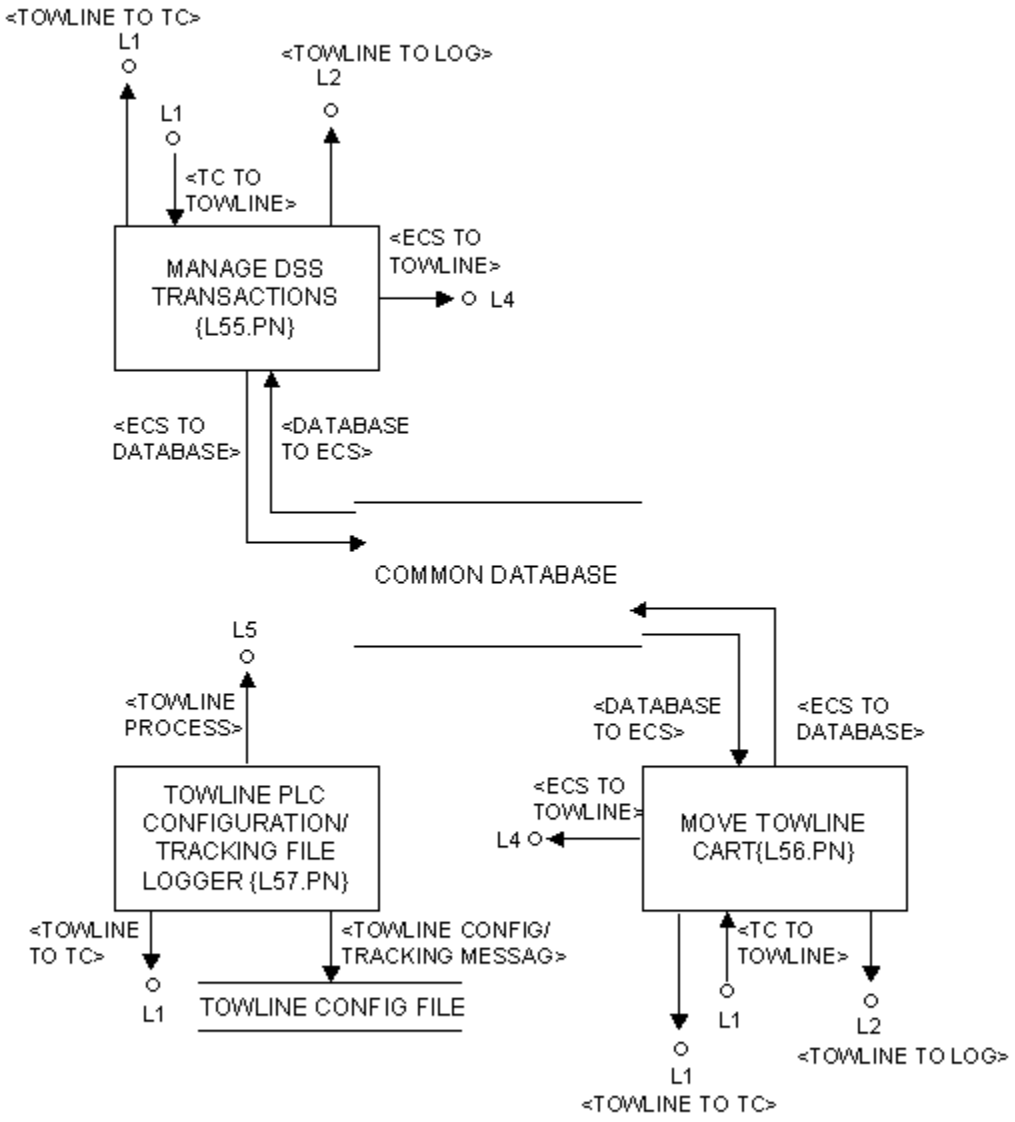

3.2.18.5.1 L55.PN - Manage DSS Transactions

Process Name	Process ID #	Date
Manage DSS Transactions	L55.PN	November 6, 1997

Requirement ID #(s)

SECS-RC1.1, SECS-RC1.1.10, SECS-RC1.2, SECS-RC1.3, SECS-RC1.4, SECS-RC2.11, SECS-RC12.4

Process Narrative

This process accepts an Upper Tier request from the Traffic Controller (L1.DFD) to move a loaded towline cart from one towline workstation to another. The process calls the Move Towline Cart Process (L56.PN) to determine routing for the towline cart. Up to ten (10) intermediate destinations and the final destination are stored in the Common Database. The appropriate ECS TO TOWLINE messages are formatted and sent to the towline PLC through the Towline Buffering Process (L4.PN).

The Upper Tier also sends a second category of SMM that controls the number of tracking control numbers held in the Common Database. When the Upper Tier sends the appropriate SMM, the process stores or deletes the tracking control number in the COMMON DATABASE.

This process sends a formatted message to the Towline Message Logger (L2.PN) for possible logging.

3.2.18.5.2 L56.PN - Move Towline Cart

Process Name	Process ID #	Date
Move Towline Cart Page 1 of 2	L56.PN	November 6, 1997

Requirement ID #(s)
SECS-RC1.1, SECS-RC1.1.10, SECS-RC1.2, SECS-RC1.3, SECS-RC1.4, SECS-RC2.11

Process Narrative

This process receives requests to move carts and determines if cart movement is allowed. The specific towline destination and route to that destination is determined, and the cart is started moving to the first destination along the route. When the cart arrives at intermediate destinations, this process is again used by the Update for Arrivals (L5211.PN) process to continue the move on to the final destination.

Requests to move carts are received from several sources. The Upper Tier directed movement is generally received via other DSS functions. DSS sends ECS an SMM through the Towline Traffic Controller Communications process (L1.PN). The SMM is forwarded to the Towline Message Formatting process (L5.PN) for processing. For example, the Receipt Entry process sends a SMM when the storage destination is determined and requests that this process move the material. When the material is picked from storage, the Upper Tier sends a SMM to move the material to a pack station.

Movement requests are also generated by an operator using a keypad conversation controlled by the ECS Keypad Interface process (K.DFD) or a PC conversation controlled by the ECS User Interface (U.DFD).

Movement requests are additionally requested by the Manage Medium/Heavy Queue process {L541.DFD} or the Manage Empty Carts process {L542.DFD}.

When the towline destination is an area that has multiple spurs, this process determines the specific spur within that functional area. Various methods are used to determine the spur based on the area and whether it is a logical chain of carts or a single cart. For example, when material is moved into a Medium/Heavy Queue, the destination spur is determined by finding a spur with the same priority as the material and with sufficient room. Another example is the Intradepot Queues at Intradepot South; the spur is determined by the warehouse associated with the material. Distribution across multiple spurs without a special priority, type of destination associate is done a workload balancing basis. In the Common Database, the ‘Conveyances’, ‘Workstations’, and ‘Chains’ tables are accessed using the above algorithms to provide the data necessary to determine the specific spur.

Once the specific spur is determined, this process generates the path the towline cart must follow to reach the final destination workstation. For each segment along the path, the ‘Workstations’ table is read and if any towline spur, loop, or transfer along the route is disabled, an alternate route is chosen (if one exists). The alternate path is generated and the ‘Workstations’ table is again read for each segment of the alternate path. When the primary or alternate path is chosen, the ‘Conveyances’ table is updated to contain the final destination and spur and all the intermediate destinations in between. A <Towline Cart Move> ECS to Towline PLC transaction for the first intermediate destination is then sent to the PLC via the Towline Buffering process (L4.PN).

This process sends a formatted message to the Towline Message Logger (L2.PN) for possible logging.

3.2.18.5.3 L57.PN - Towline PLC Configuration/Tracking File Logger

Process Name	Process ID #	Date
Towline PLC Configuration/ Tracking File Logger	L57.PN	November 6, 1997

Requirement ID #(s)
SECS-RC1.1, SECS-RC1.1.10, SECS-RC1.4, SECS-RC4.3

Process Narrative

This process accepts a configuration or tracking Towline to PLC message from Towline Message Formatting and Buffering (L5.PN) and writes the message to appropriate configuration or tracking file, TOWLINE CONF FILE.

This process sends a formatted message to the Towline Message Logger (L2.PN) for possible logging.

3.2.18.5.4 **L51.DFD**

Process ID #	Date
L51.DFD - Manage User Interface Transactions Page 1 of 2	November 6, 1997

Requirement ID #(s)

SECS-RC1.1, SECS-RC1.1.10, SECS-RC1.2, SECS-RC1.3, SECS-RC1.4, SECS-RC2.3,SECS-RC2.5, SECS-RC2.6, SECS-RC2.8, SECS-RC3.1, SECS-RC4.2, SECS-RC4.3, SECS-RC5

Data Flow Diagram

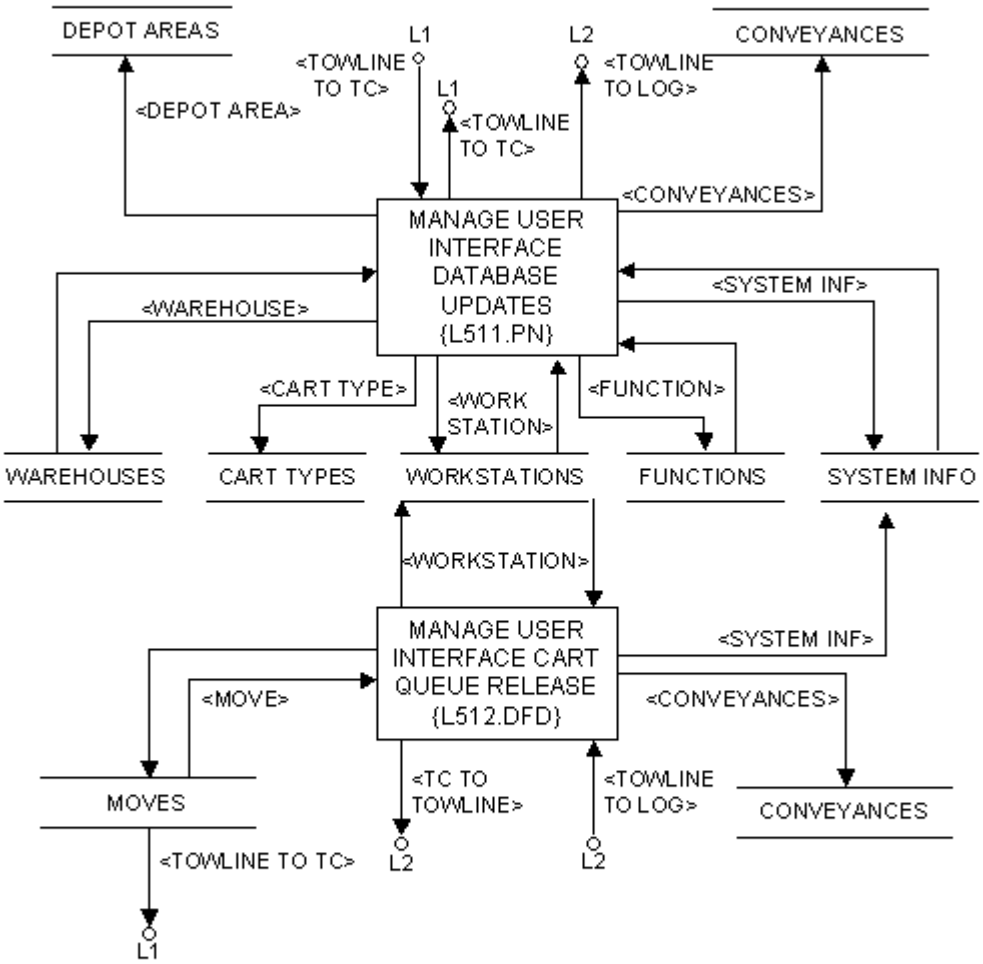

Process ID #	Date
L51.DFD - Manage User Interface Transactions Page 2 of 2	November 6, 1997

Requirement ID #(s)

SECS-RC1.1, SECS-RC1.1.10, SECS-RC1.2, SECS-RC1.3, SECS-RC1.4, SECS-RC2.3, SECS-RC2.5, SECS-RC2.6, SECS-RC2.8, SECS-RC3.1, SECS-RC4.2, SECS-RC4.3, SECS-RC5

Data Flow Diagram

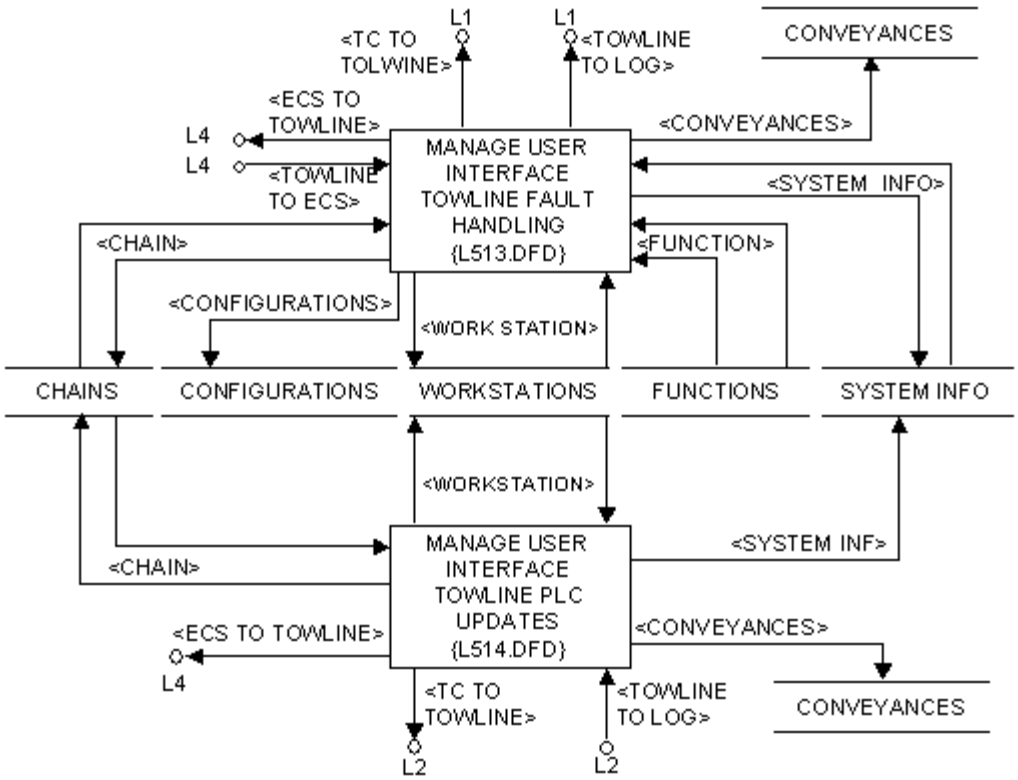

3.2.18.5.4.1 **L511.DFD**

Process ID #	Date
L511.DFD - Manage User Interface Database Updates Page 1 of 3	November 6, 1997

Requirement ID #(s)

SECS-RC1.1, SECS-RC1.1.10, SECS-RC1.2, SECS-RC1.4, SECS-RC2.8, SECS-RC3.1, SECS-RC4.2, SECS-RC4.3, SECS-RC5

Data Flow Diagram

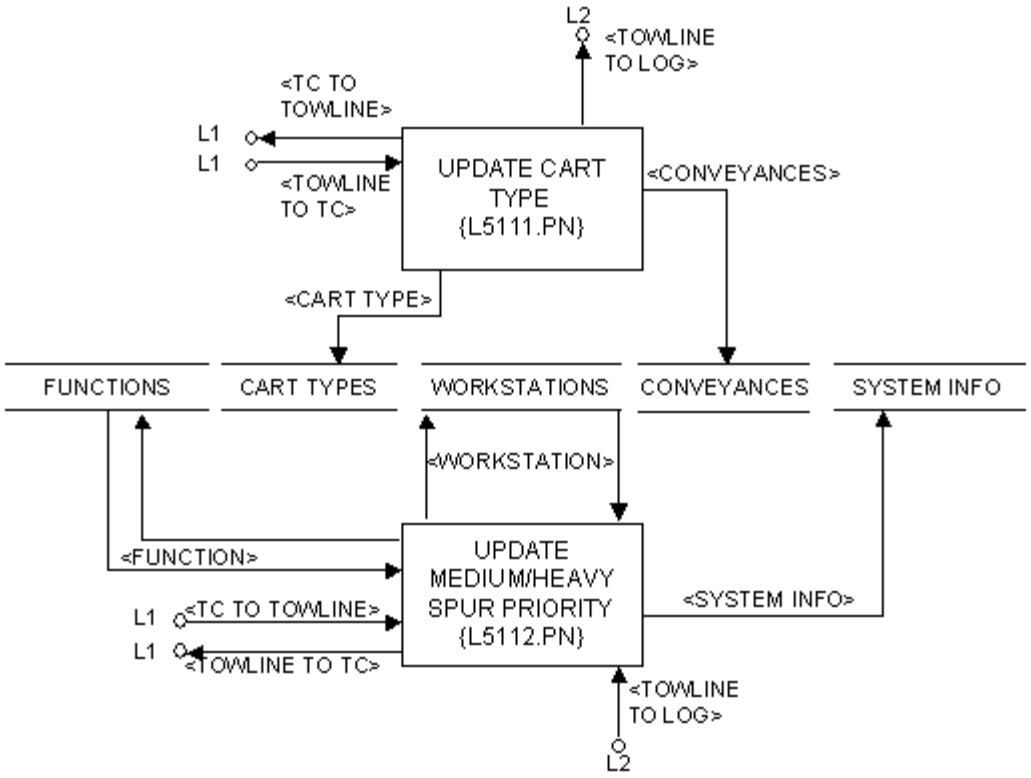

Process ID #	Date
L511.DFD - Manage User Interface Database Updates Page 2 of 3	November 6, 1997

Requirement ID #(s)

SECS-RC1.1, SECS-RC1.1.10, SECS-RC1.2, SECS-RC1.4, SECS-RC2.8, SECS-RC3.1, SECS-RC4.2, SECS-RC4.3, SECS-RC5

Data Flow Diagram

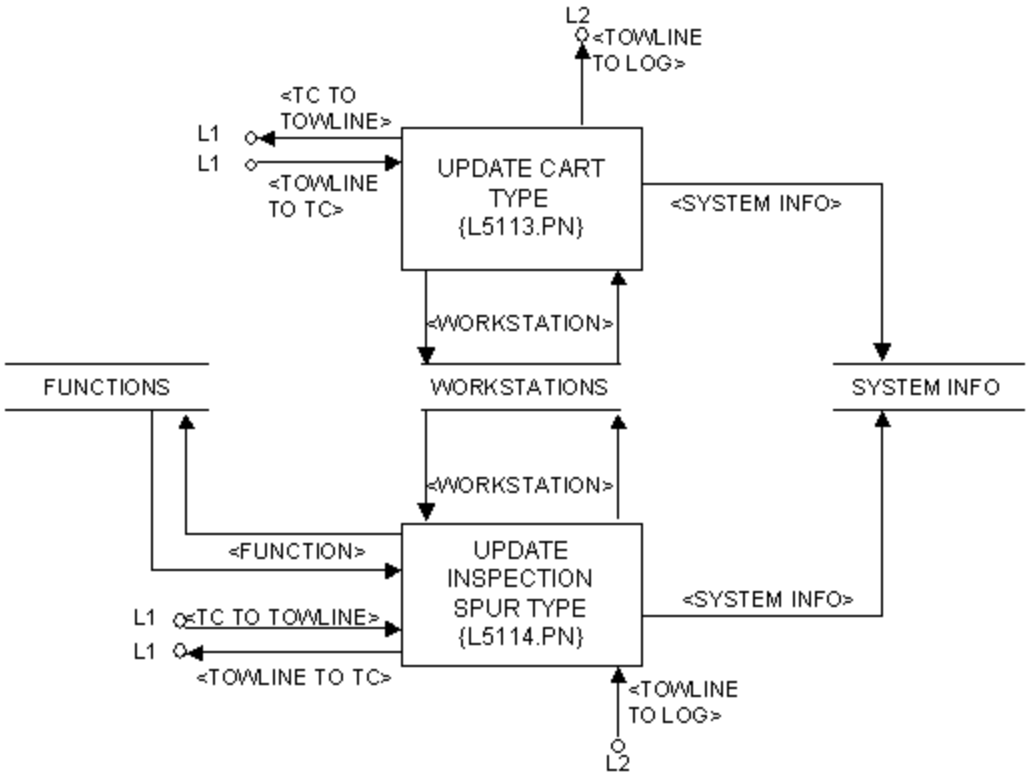

Process ID #	Date
L511.DFD - Manage User Interface Database Updates Page 3 of 3	November 6, 1997

Requirement ID #(s)

SECS-RC1.1, SECS-RC1.1.10, SECS-RC1.2, SECS-RC1.4, SECS-RC2.8, SECS-RC3.1, SECS-RC4.2, SECS-RC4.3, SECS-RC5

Data Flow Diagram

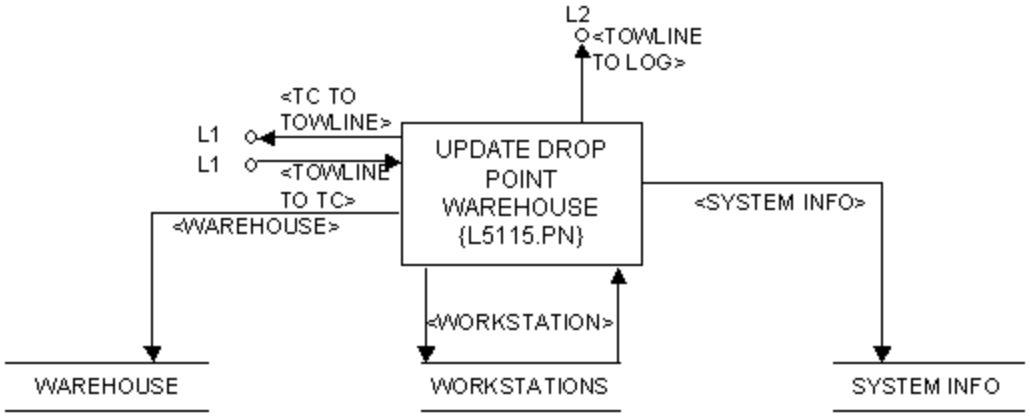

3.2.18.5.4.1.1 **L5111.PN - Update Cart Type**

Process Name	Process ID #	Date
Update Cart Type	L5111.PN	November 6, 1997

Requirement ID #(s)

SECS-RC1.1, SECS-RC1.1.10, SECS-RC1.2, SECS-RC1.4, SECS-RC2.8, SECS-RC3.1, SECS-RC4.3

Process Narrative

This process allows an operator to notify the ECS that a cart type or up to five cart types have changed. An example would be when a trash container is placed on a standard roller bed cart and the type becomes whether empty trash cart or loaded trash cart. This information is necessary because, for example, now the trash cart cannot be considered for delivery to an automatic loading workstation.

In most cases, the cart type change will be handled internally by the ECS. For example, at automatic loaders and unloaders where the cart type changes between empty and loaded standard cart, or when a cart leaves the tote box stacker, the type changes from empty totebox cart to a full totebox cart. However, when an operator changes empty standard cart to an empty totebox cart by placing a special purpose totebox pallet on it, the ECS must be notified through this process.

This operation is performed through the User Interface Update Cart Type (U827.PN). The prompt allows the operator to enter up to Five (5) cart IDs. When the operator has entered the Cart IDs through <UI Cart Type Update>, the User Interface Update Cart Type (U827.PN) verifies each entry. When the process determines that there is correct entry, the User Interface Update Cart Type (U827.PN) obtains and displays the current Cart Type for each of the Cart IDs entered. The operator is then allowed to update any of the Cart Types (<UI Cart Type Update>). The User Interface passes the Traffic Controller (T.DFD) an ECS Internal Message. This ECS Internal Message is then forwarded to the Towline Subcontroller (L.DFD) that updates the ‘Conveyances’ and ‘Cart Types’ database tables. This process returns an ECS Internal Message via the Traffic Controller (T.DFD) to signal status of the update to the User Interface (U.DFD). The User Interface Update Cart Type (U827.PN) redisplays the cart type(s) and the operator is prompted for further changes or to exit.

This process sends a formatted message to the Towline Message Logger (L2.PN) for possible logging.

3.2.18.5.4.1.2 **L5112.PN - Update Medium/Heavy Spur Priority**

Process Name	Process ID #	Date
Update Medium/Heavy Spur Priority	L5112.PN	November 6, 1997

Requirement ID #(s)

SECS-RC1.1, SECS-RC1.1.10, SECS-RC1.2, SECS-RC1.4, SECS-RC2.8, SECS-RC3.1, SECS-RC4.3

Process Narrative

This process allows the priority configuration of the Medium/Heavy queues to be adjusted to compensate for variations in priority volumes. Priority configuration is used by the Move Towline Cart process (L56.PN) to move the cart into the correct priority spur.

The priority scheme is as follows:

- DUE TODAY = 1,
- PAST DUE = 2,
- DUE TOMORROW = 3, and
- DUE AFTER TOMORROW = 4.

When this operator transaction is requested, the User Interface Update M/H Pack Queue Priority (U829.PN) displays the current spur-priority assignments. The operator changes the desired spur priority configurations through <Priority Update>. The User Interface Update M/H Pack Queue Priority (U829.PN) process will assure that there is at least one spur per priority and passes via the Traffic Controller (T.DFD) the Towline Subcontroller (L.DFD) an ECS Internal Message to update the database. The new spur priority assignments are recorded in ‘Functions’ and ‘Workstations’. This process returns an ECS Internal Message via the Traffic Controller (T.DFD) to signal status of the update to the User Interface (U.DFD). The User Interface Update M/H Pack Queue Priority (U829.PN) redisplays the priority configuration and the operator is prompted for further changes or to exit.

This process sends a formatted message to the Towline Message Logger (L2.PN) for possible logging.

3.2.18.5.4.1.3 **L5113.PN - Update Towline Spur Status**

Process Name	Process ID #	Date
Update Towline Spur Status	L5113.PN	November 6, 1997

Requirement ID #(s)

SECS-RC1.1, SECS-RC1.1.10, SECS-RC1.2, SECS-RC1.4, SECS-RC2.8, SECS-RC3.1, SECS-RC4.3

Process Narrative

This process updates the 'Workstations' database table based on operator input from the User Interface (U.DFD). This process allows a supervisor to set workstations active or inactive based on workload changes. ECS will only route carts to logically active workstations. If a workstation is set to logically inactive, the ECS will not route carts to the specific workstation.

Through the User Interface Update Towline Spur Status (U82A.PN), the operator requests to update spur status by area. The User Interface Update Towline Spur Status (U82A.PN) provides the operator with the current logical spur statuses (active or inactive).

The operator changes the desired spur statuses through the User Interface Update Towline Spur Status (U82A.PN). The User Interface (U.DFD) sends an ECS Internal Message to the Towline Subcontroller (L.DFD) via the Traffic Controller (T.DFD). This process updates the 'Workstations' database table and 'System Info' shared memory and returns an ECS Internal Message to the User Interface (U.DFD) via the Traffic Controller (T.DFD) to indicate update status. In the case of successful status, the User Interface Update Towline Spur Status (U82A.PN) displays a message for a new area or to exit. Otherwise, an error message is displayed.

This process sends a formatted message to the Towline Message Logger (L2.PN) for possible logging.

3.2.18.5.4.1.4 **L5114.PN - Update Inspection Spur Status**

Process Name	Process ID #	Date
Update Inspection Spur Status	L5114.PN	November 6, 1997

Requirement ID #(s)

SECS-RC1.1, SECS-RC1.1.10, SECS-RC1.2, SECS-RC1.4, SECS-RC2.8, SECS-RC3.1, SECS-RC4.3

Process Narrative

This process updates the 'Functions' and 'Workstations' database tables based on operator input from the User Interface (U.DFD). This process allows a supervisor to set Inspection workstations based on workload changes. The possible Inspections spurt types are Random, Retrograde, New Procurement, and Depot Property. The possible Receipt Entry spur types are Mission and CCP.

Through the User Interface Update Inspection Spur Type Status (U82B.PN), the operator requests to update spur type configuration. The User Interface Update Inspection Spur Status (U82B.PN) provides the operator with the current assignments.

The operator changes to the desired type configuration through the User Interface Update Inspection Spur Status (U82B.PN). The User Interface (U.DFD) sends an ECS Internal Message to the Towline Subcontroller (L.DFD) via the Traffic Controller (T.DFD). This process updates the 'Workstations' and 'Functions' database tables and 'System Info' shared memory; and returns an ECS Internal Message to the User Interface (U.DFD) via the Traffic Controller (T.DFD) to indicate update status. In the case of successful status, the User Interface Update Towline Spur Status (U82B.PN) displays a message for further changes or to exit. Otherwise, an error message is displayed.

This process sends a formatted message to the Towline Message Logger (L2.PN) for possible logging.

3.2.18.5.4.1.5 **L5115.PN - Update Drop Point Warehouse**

Process Name	Process ID #	Date
Update Drop Point Warehouse	L5115.PN	November 6, 1997

Requirement ID #(s)

SECS-RC1.1, SECS-RC1.1.10, SECS-RC1.2, SECS-RC1.4, SECS-RC2.8, SECS-RC3.1, SECS-RC4.3

Process Narrative

This process updates the 'Warehouses' and 'Workstations' database tables based on operator input from the User Interface (U.DFD). This process allows a supervisor to adjust the warehouse association of the Intradepot queues for delivery of material to outlying warehouses based on workload changes. Multiple warehouses may be associated with one Intradepot Queue spur, but this process assures that only one warehouse is assigned to only one queue workstation at any given time.

Through the User Interface Update Drop Point Warehouse (U82C.PN), the operator requests to update the warehouse-queue assignment. The User Interface Update Drop Point Warehouse (U82C.PN) provides the operator with the current assignments.

The operator changes the desired spur warehouse configuration through the User Interface Update Drop Point Warehouse (U82C.PN). The User Interface (U.DFD) sends an ECS Internal Message to the Towline Subcontroller (L.DFD) via the Traffic Controller (T.DFD). This process updates the 'Warehouses' and 'Workstations' database tables and 'System Info' shared memory; and returns an ECS Internal Message to the User Interface (U.DFD) via the Traffic Controller (T.DFD) to indicate update status. In the case of successful status, the User Interface Update Drop Point Warehouse (U82D.PN) displays a message for further changes or to exit. Otherwise, an error message is displayed.

This process sends a formatted message to the Towline Message Logger (L2.PN) for possible logging.

3.2.18.5.4.2 **L512.DFD**

Process ID #	Date
L512.DFD - Manage Cart Queue Release	November 6, 1997

Requirement ID #(s)

SECS-RC1.1, SECS-RC1.1.10, SECS-RC1.2, SECS-RC1.3, SECS-RC1.4, SECS-RC2.8, SECS-RC3.1, SECS-RC4.3

Data Flow Diagram

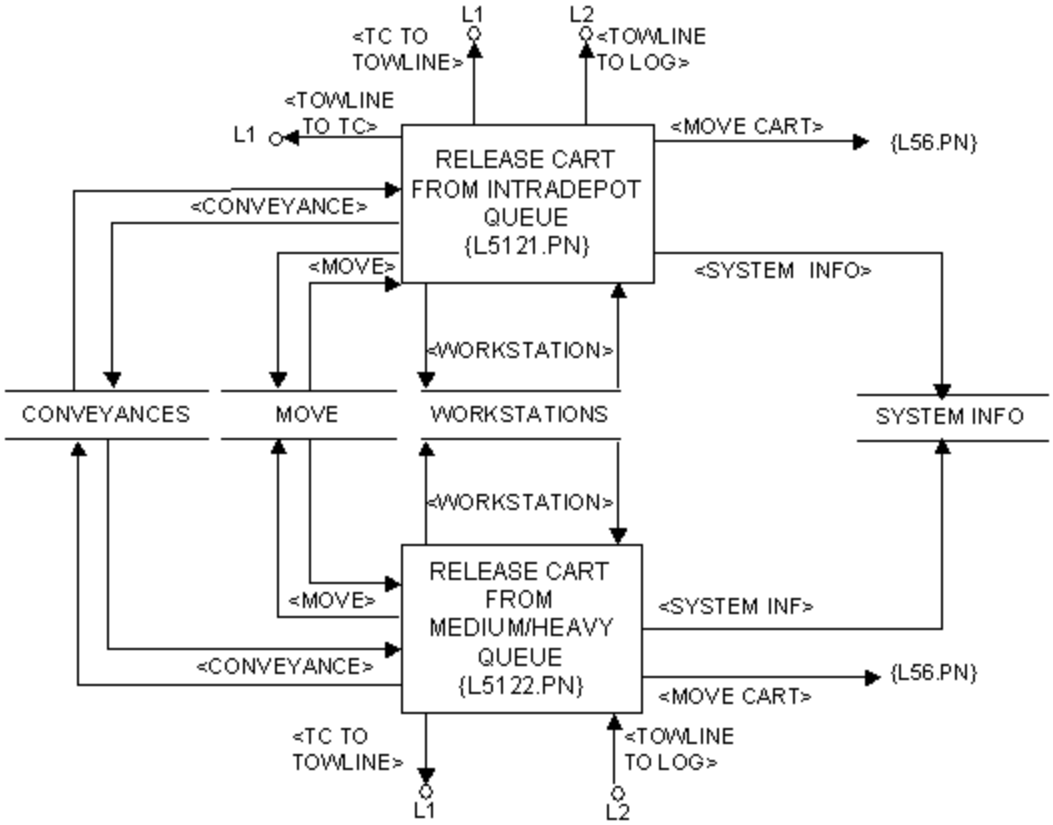

3.2.18.5.4.2.1 **L5121.PN - Release Cart From Intradepot Queue**

Process Name	Process ID #	Date
Release Cart From Intradepot Queue	L5121.PN	November 6, 1997

Requirement ID #(s)

SECS-RC1.1, SECS-RC1.1.10, SECS-RC1.2, SECS-RC1.3, SECS-RC1.4, SECS-RC2.8, SECS-RC3.1, SECS-RC4.3

Process Narrative

This process releases carts from the Intradepot Queue based on operator input from the User Interface (U.DFD). In the Intradepot Queues, the normal procedure is to release carts from the queues to the outbound conveyors. This process determines which conveyor lane to route the material to based on the outlying warehouse destination and updates the 'Moves' and 'Conveyances' database tables based on the outlying warehouse destination.

Through the User Interface Release Cart From Intradepot Queue (U825.PN), the operator requests to move a cart or a queue of carts to the outbound pallet conveyors at Intradepot Receiving. The User Interface Release Cart From Intradepot Queue (U825.PN) provides the operator with the 'Moves', 'Conveyances', and 'System Info' information.

The User Interface (U.DFD) sends an ECS Internal Message to the Towline Subcontroller (L.DFD) via the Traffic Controller (T.DFD). This process updates the 'Conveyances', 'Moves' and 'Workstations' database tables and calls the Move Towline Cart process (L56.PN) to format and send a towline move message. The process also returns an ECS Internal Message to the User Interface (U.DFD) via the Traffic Controller (T.DFD) to indicate movement status. In the case of successful status, the User Interface Release Cart From Intradepot Queue (U825.PN) displays a message for further releases or to exit. Otherwise, an error message is displayed.

This process sends a formatted message to the Towline Message Logger (L2.PN) for possible logging.

3.2.18.5.4.2.2 **L5122.PN - Release Cart From Medium/Heavy Queue**

Process Name	Process ID #	Date
Release Cart From Medium/Heavy Queue	L5122.PN	November 6, 1997

Requirement ID #(s)

SECS-RC1.1, SECS-RC1.1.10, SECS-RC1.2, SECS-RC1.3, SECS-RC1.4, SECS-RC2.8, SECS-RC3.1, SECS-RC4.3

Process Narrative

This process releases carts form the Medium/Heavy Queue based on operator input from the User Interface (U.DFD). In the Medium/Heavy Queues, the normal procedure is to release carts from the queues to lane with the most space available. This process determines if the cart selected for release is the first cart at the head of the queue. If the cart is at the head of the queue, it may 'override' the normal release procedure (i.e., by priority) and is eligible for release.

Through the User Interface Release Cart From Medium/Heavy Queue (U826.PN), the operator requests to move a cart or a queue of carts to the outbound pallet conveyors at Medium/Heavy Receiving. The User Interface Release Cart From Medium/Heavy Queue (U826.PN) provides the operator with the 'Moves', 'Conveyances', and 'System Info' information.

The User Interface (U.DFD) sends an ECS Internal Message to the Towline Subcontroller (L.DFD) via the Traffic Controller (T.DFD). This process updates the 'Conveyances', 'Moves' and 'Workstations' database tables and calls the Move Towline Cart process (L56.PN) to format and send a towline move message. The process also returns an ECS Internal Message to the User Interface (U.DFD) via the Traffic Controller (T.DFD) to indicate movement status. In the case of successful status, the User Interface Release Cart From Medium/Heavy Queue (U826.PN) displays a message for further releases or to exit. Otherwise, an error message is displayed.

This process sends a formatted message to the Towline Message Logger (L2.PN) for possible logging.

3.2.18.5.4.3 **L513.DFD**

Process ID #	Date
L513.DFD - Manage User Interface Towline Fault Handling Page 1 of 4	November 6, 1997

Requirement ID #(s)

SECS-RC1.1, SECS-RC1.1.10, SECS-RC1.2, SECS-RC1.3, SECS-RC1.4, SECS-RC2.8, SECS-RC2.11, SECS-RC3.1, SECS-RC4.3

Data Flow Diagram

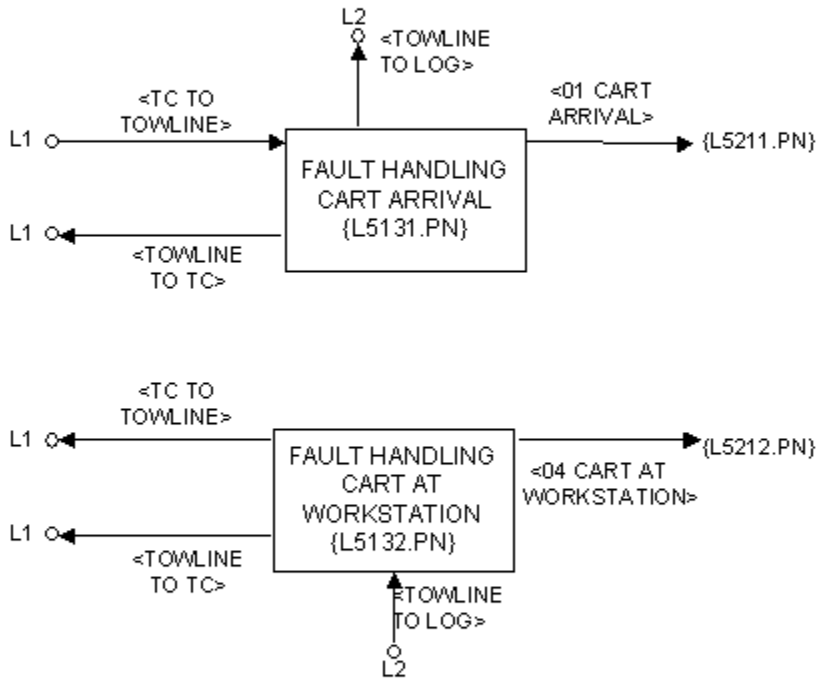

Process ID #	Date
L513.DFD Manage User Interface Towline Fault Handling Page2 of 4	November 6, 1997

Requirement ID #(s)

SECS-RC1.1, SECS-RC1.1.10, SECS-RC1.2, SECS-RC1.3, SECS-RC1.4, SECS-RC2.8, SECS-RC2.11, SECS-RC3.1, SECS-RC4.3

Data Flow Diagram

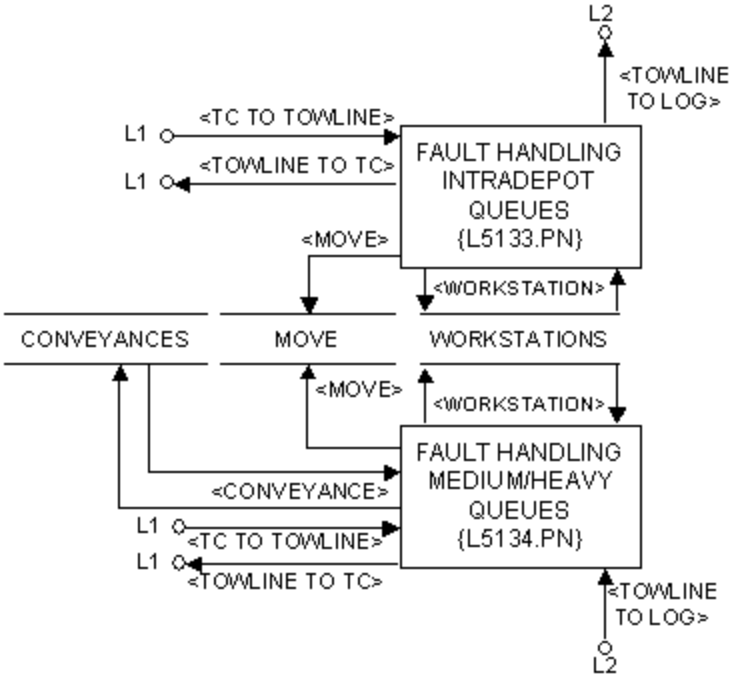

Process ID #	Date
L513.DFD Manage User Interface Towline Fault Handling Page 3 of 4	November 6, 1997

Requirement ID #(s)

SECS-RC1.1, SECS-RC1.1.10, SECS-RC1.2, SECS-RC1.3, SECS-RC1.4, SECS-RC2.8, SECS-RC2.11, SECS-RC3.1, SECS-RC4.3

Data Flow Diagram

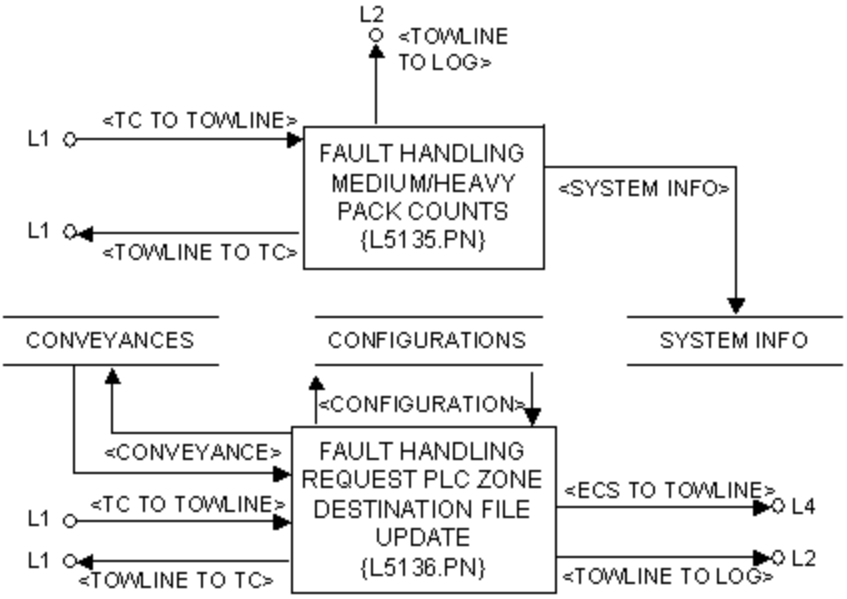

Process ID #	Date
L513.DFD Manage User Interface Towline Fault Handling Page 4 of 4	November 6, 1997

Requirement ID #(s)

SECS-RC1.1, SECS-RC1.1.10, SECS-RC1.2, SECS-RC1.3, SECS-RC1.4, SECS-RC2.8, SECS-RC2.11, SECS-RC3.1, SECS-RC4.3

Data Flow Diagram

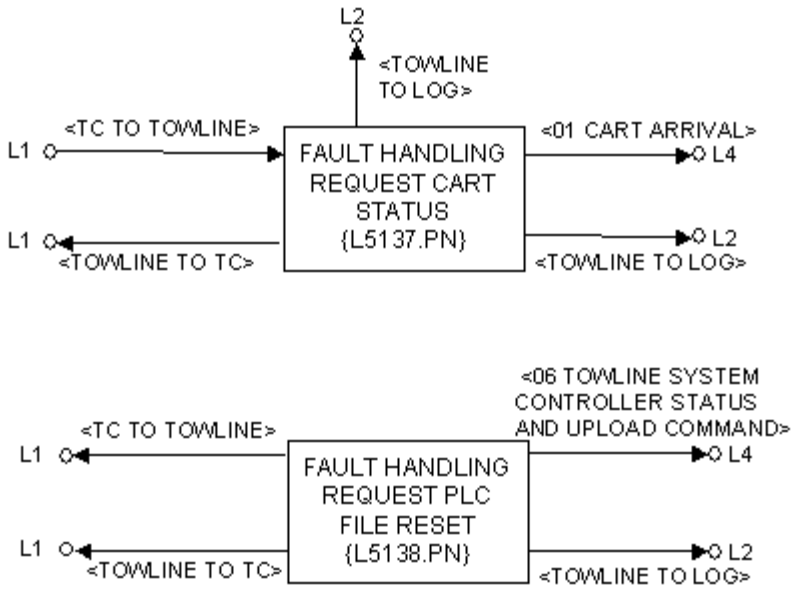

3.2.18.5.4.3.1 **L5131.PN - Fault Handling Cart Arrival**

Process Name	Process ID #	Date
Fault Handling Cart Arrival	L5131.PN	November 6, 1997

Requirement ID #(s)

SECS-RC1.1, SECS-RC1.1.10, SECS-RC1.2, SECS-RC1.3, SECS-RC1.4, SECS-RC2.8, SECS-RC2.11, SECS-RC3.1, SECS-RC4.3

Process Narrative

This process will receive a message (J93) through a request from User Interface Subcontroller (U.DFD) via the Traffic Subcontroller (T.DFD). A message is formatted and sent to the Towline Message Logger (L2.PN) for possible logging. The process will then send a message (01) to Update For Arrivals (L5211.PN).

This process returns a Towline to TC message to signal status of the update to the User Interface (U.DFD). The User Interface (U.DFD) prompts the operator for further changes or to exit.

3.2.18.5.4.3.2 **L5132.PN - Fault Handling Cart At Workstation**

Process Name	Process ID #	Date
Fault Handling Cart At Workstation	L5132.PN	November 6, 1997

Requirement ID #(s)

SECS-RC1.1, SECS-RC1.1.10, SECS-RC1.2, SECS-RC1.3, SECS-RC1.4, SECS-RC2.8, SECS-RC2.11, SECS-RC3.1, SECS-RC4.3

Process Narrative

This process will receive a message (J93) through a request from User Interface Subcontroller (U.DFD) via the Traffic Subcontroller (T.DFD). A message is formatted and sent to the Towline Message Logger (L2.PN) for possible logging. The process will then send a message (04) to Update For Cart At Workstation (L5212.PN).

This process returns a Towline to TC message to signal status of the update to the User Interface (U.DFD). The User Interface (U.DFD) prompts the operator for further changes or to exit.

3.2.18.5.4.3.3 **L5133.PN - Fault Handling Intradepot Queues**

Process Name	Process ID #	Date
Fault Handling Intradepot Queues	L5133.PN	November 6, 1997

Requirement ID #(s)

SECS-RC1.1, SECS-RC1.1.10, SECS-RC1.2, SECS-RC1.3, SECS-RC1.4, SECS-RC2.8, SECS-RC2.11, SECS-RC3.1, SECS-RC4.3

Process Narrative

This process will receive a message (J95) through a request from User Interface Subcontroller (U.DFD) via the Traffic Subcontroller (T.DFD). A message is formatted and sent to the Towline Message Logger (L2.PN) for possible logging. The process will then update the 'Moves' and 'Workstations' database records.

This process returns a Towline to TC message to signal status of the update to the User Interface (U.DFD). The User Interface (U.DFD) prompts the operator for further changes or to exit.

3.2.18.5.4.3.4 **L5134.PN - Fault Handling Medium/Heavy Pack Queues**

Process Name	Process ID #	Date
Fault Handling Medium/ Heavy Pack Queues	L5134.PN	November 6, 1997

Requirement ID #(s)

SECS-RC1.1, SECS-RC1.1.10, SECS-RC1.2, SECS-RC1.3, SECS-RC1.4, SECS-RC2.8, SECS-RC2.11, SECS-RC3.1, SECS-RC4.3

Process Narrative

This process will receive a message (J95) through a request from User Interface Subcontroller (U.DFD) via the Traffic Subcontroller (T.DFD). A message is formatted and sent to the Towline Message Logger (L2.PN) for possible logging. The process will then update the 'Moves', 'Conveyances' and 'Workstations' database records.

This process returns a Towline to TC message to signal status of the update to the User Interface (U.DFD). The User Interface (U.DFD) prompts the operator for further changes or to exit.

3.2.18.5.4.3.5 **L5135.PN - Fault Handling Medium/Heavy Pack Counts**

Process Name	Process ID #	Date
Fault Handling Medium/ Heavy Pack Counts	L5135.PN	November 6, 1997

Requirement ID #(s)

SECS-RC1.1, SECS-RC1.1.10, SECS-RC1.2, SECS-RC1.3, SECS-RC1.4, SECS-RC2.8, SECS-RC2.11, SECS-RC3.1, SECS-RC4.3

Process Narrative

This process will receive a message (J97) through a request from User Interface Subcontroller (U.DFD) via the Traffic Subcontroller (T.DFD). A message is formatted and sent to the Towline Message Logger (L2.PN) for possible logging. The process will then update the 'System Info' database record.

This process returns a Towline to TC message to signal status of the update to the User Interface (U.DFD). The User Interface (U.DFD) prompts the operator for further changes or to exit.

3.2.18.5.4.3.6 **L5136.PN - Fault Handling Request PLC Zone Destination File Update**

Process Name	Process ID #	Date
Fault Handling Request PLC Zone Destination File Update	L5136.PN	November 6, 1997

Requirement ID #(s)

SECS-RC1.1, SECS-RC1.1.10, SECS-RC1.2, SECS-RC1.3, SECS-RC1.4, SECS-RC2.8, SECS-RC2.11, SECS-RC3.1, SECS-RC4.3

Process Narrative

This process will receive a message (T07) through a request from User Interface Subcontroller (U.DFD) via the Traffic Subcontroller (T.DFD). A message is formatted and sent to the Towline Message Logger (L2.PN) for possible logging. The database records 'Conveyances' and 'Configurations' will then be updated. A message will be formatted and sent to the Towline Message Buffering (L4.PN) process to be forwarded to the Towline PLCs. Finally, a Towline to TC will be formatted and sent to the Towline Traffic Controller Communications (L1.PN) process to be forwarded back to the User Interface Subcontroller (U.DFD).

3.2.18.5.4.3.7 **L5137.PN - Fault Handling Request Cart Status**

Process Name	Process ID #	Date
Fault Handling Request Cart Status	L5137.PN	November 6, 1997

Requirement ID #(s)

SECS-RC1.1, SECS-RC1.1.10, SECS-RC1.2, SECS-RC1.3, SECS-RC1.4, SECS-RC2.8, SECS-RC2.11, SECS-RC3.1, SECS-RC4.3

Process Narrative

This process will receive a message (T11) through a request from User Interface Subcontroller (U.DFD) via the Traffic Subcontroller (T.DFD). A message is formatted and sent to the Towline Message Logger (L2.PN) for possible logging. The process will then send a message to the Towline PLC via the Towline Message Buffering (L4.PN) process. Finally, a Towline to TC message will be formatted and sent to the Towline Traffic Controller Communications (L1.PN) process to be forwarded back to the User Interface Subcontroller (U.DFD).

3.2.18.5.4.3.8 **L5138.PN - Fault Handling Request PLC File Reset**

Process Name	Process ID #	Date
Fault Handling Request PLC File Reset	L5138.PN	November 6, 1997

Requirement ID #(s)

SECS-RC1.1, SECS-RC1.1.10, SECS-RC1.2, SECS-RC1.3, SECS-RC1.4, SECS-RC2.8, SECS-RC2.11, SECS-RC3.1, SECS-RC4.3

Process Narrative

This process will receive a message (T13) through a request from User Interface Subcontroller (U.DFD) via the Traffic Subcontroller (T.DFD). A message is formatted and sent to the Towline Message Logger (L2.PN) for possible logging. Finally, this process returns a Towline to TC message to signal status of the update to the User Interface (U.DFD). The User Interface (U.DFD) prompts the operator for further changes or to exit.

3.2.18.5.4.4 **L514.DFD**

Process ID #	Date
L514.DFD Manage User Interface Towline PLC Updates	November 6, 1997

Requirement ID #(s)

SECS-RC1.1, SECS-RC1.1.10, SECS-RC1.2, SECS-RC1.3, SECS-RC1.4, SECS-RC2.2, SECS-RC2.6, SECS-RC2.8, SECS-RC2.11, SECS-RC3.1, SECS-RC4.3

Data Flow Diagram

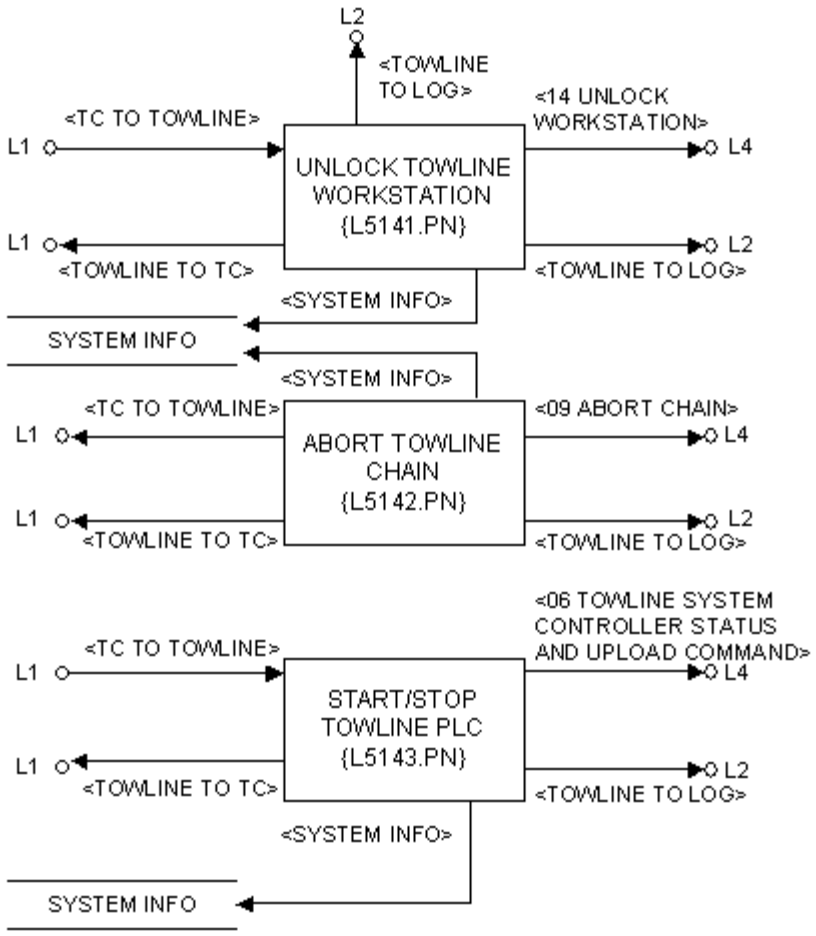

3.2.18.5.4.4.1 **L5141.PN - Unlock Towline Workstation**

Process Name	Process ID #	Date
Unlock Towline Workstation	L5141.PN	November 6, 1997

Requirement ID #(s)

SECS-RC1.1, SECS-RC1.1.10, SECS-RC1.2, SECS-RC1.3, SECS-RC1.4, SECS-RC2.2, SECS-RC2.8, SECS-RC2.11, SECS-RC3.1, SECS-RC4.3

Process Narrative

This process receives a TC to Towline message from the User Interface Unlock Towline Workstation process (U828.PN) by specifying the workstation ID. The process dissolves the ECS logical lock on a workstation by updating SYSTEM INFO and formats a 14 UNLOCK WORKSTATION message to be sent to the towline via the Towline Message Buffering process (L4.PN).

This process also returns a TOWLINE TO TC message for delivery to the User Interface (U.DFD) to indicate successful status or error messages.

This process sends formatted messages to the Towline Message Logger (L2.PN) process for logging.

3.2.18.5.4.4.2 **L5142.PN - Abort Towline Chain**

Process Name	Process ID #	Date
Abort Towline Chain	L5142.PN	November 6, 1997

Requirement ID #(s)

SECS-RC1.1, SECS-RC1.1.10, SECS-RC1.2, SECS-RC1.3, SECS-RC1.4, SECS-RC2.8, SECS-RC2.11, SECS-RC3.1, SECS-RC4.3

Process Narrative

This process receives a TC to Towline message from the User Interface Abort Chain process (U82E.PN) by specifying the chain ID. The process dissolves the ECS logical lock on a workstation by updating SYSTEM INFO and formats a 09 Abort Chain message to be sent to the towline via the Towline Message Buffering process (L4.PN).

This process also returns a TOWLINE TO TC message for delivery to the User Interface (U.DFD) to indicate successful status or error messages.

This process sends formatted messages to the Towline Message Logger (L2.PN) process for logging.

3.2.18.5.4.4.3 **L5143.PN - Start/Stop Towline**

Process Name	Process ID #	Date
Start/Stop Towline	L5143.PN	November 6, 1997

Requirement ID #(s)

SECS-RC1.1, SECS-RC1.1.10, SECS-RC1.2, SECS-RC1.3, SECS-RC1.4, SECS-RC2.2, SECS-RC2.6, SECS-RC2.8, SECS-RC2.11, SECS-RC3.1, SECS-RC4.3

Process Narrative

This process receives a TC to Towline message from the User Interface Start/Stop Towline PLCs process (U851.PN) by specifying the towline zone and either a start up or shutdown flag. The process updates SYSTEM INFO and formats a 06 TOWLINE SYSTEM CONTROLLER STATUS AND UPLOAD message to be sent to the towline via the Towline Message Buffering process (L4.PN).

This process also returns a TOWLINE TO TC message for delivery to the User Interface (U.DFD) to indicate successful status or error messages.

This process sends formatted messages to the Towline Message Logger (L2.PN) process for logging.

(Note: Both functions of starting/stopping the towline PLC and the towline upload file functions are handled by the 06 message.)

3.2.18.5.5 **L52.DFD**

Process ID #	Date
L52.DFD - Manage Towline Controller Transactions	November 6, 1997

Requirement ID #(s)

SECS-RC1.1, SECS-RC1.1.10, SECS-RC1.2, SECS-RC1.3, SECS-RC1.4, SECS-RC3.1, SECS-RC4.3, SECS-RC5

Data Flow Diagram

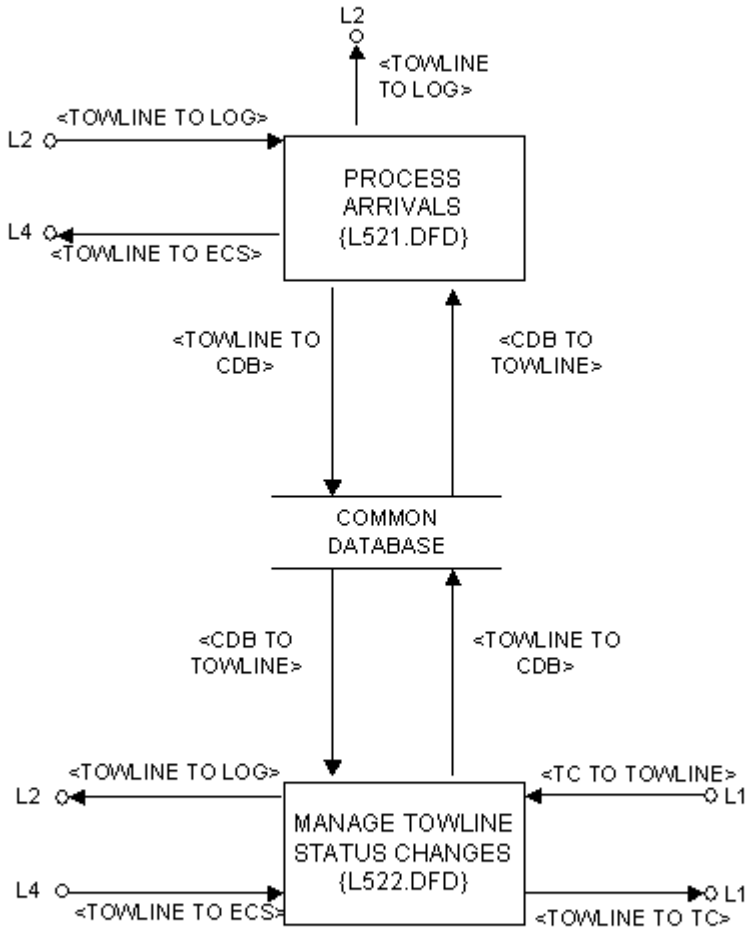

3.2.18.5.5.1 **L521.DFD**

Process ID #	Date
L521.DFD - Process Arrivals Page 1 of 2	November 6, 1997

Requirement ID #(s)

SECS-RC1.1, SECS-RC1.1.10, SECS-RC1.2, SECS-RC1.3, SECS-RC1.4, SECS-RC3.1, SECS-RC4.3, SECS-RC5

Data Flow Diagram

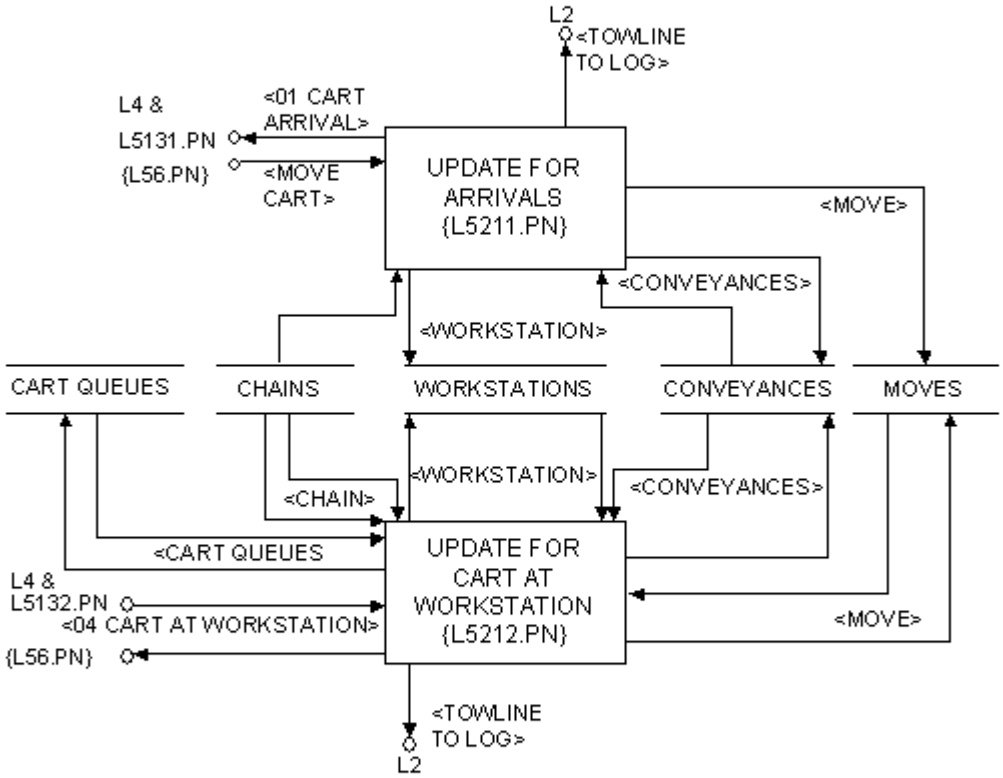

Process ID #	Date
L521.DFD - Process Arrivals Page 2 of 2	November 6, 1997

Requirement ID #(s)

SECS-RC1.1, SECS-RC1.1.10, SECS-RC1.2, SECS-RC1.3, SECS-RC1.4, SECS-RC3.1, SECS-RC4.3, SECS-RC5

Data Flow Diagram

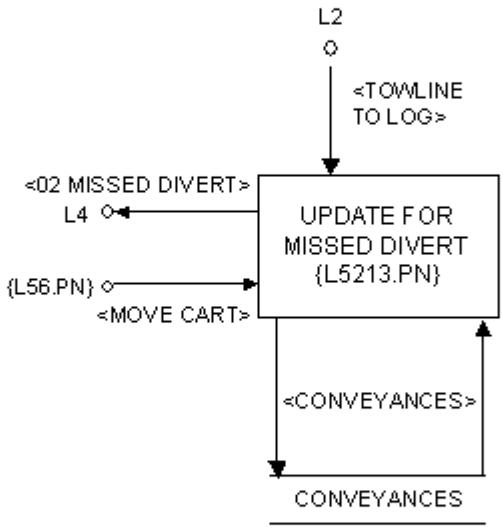

3.2.18.5.5.1.1 **L5211.PN - Update For Arrivals**

Process Name	Process ID #	Date
Update For Arrivals	L5211.PN	November 6, 1997

Requirement ID #(s)

SECS-RC1.1, SECS-RC1.1.10, SECS-RC1.2, SECS-RC1.3, SECS-RC1.4, SECS-RC3.1, SECS-RC4.3, SECS-RC5

Process Narrative

This process receives a transaction from the Towline PLC via Towline Buffering process (L4.PN) when the towline cart arrives at its assigned destination. If the arrival is at an intermediate destination, this process requests that the Move Towline Cart (L56.PN) process send another transaction to the PLC to continue the move. If the arrival is at the final destination, several database files are updated.

When a <Cart Arrival> is received from the PLC, the count of carts enroute and count of carts in the spur are updated in 'Workstation', and 'Conveyance' is read to determine if the arrival is at the final towline spur. If not, the present location is updated in 'Conveyance' and a new <Cart Move> transaction is sent to the PLC via the Move Towline Cart (L56.PN) process with the next intermediate destination.

If the arrival is at the final towline destination, the 'Conveyance' record is updated. If the arrival is at the ultimate destination and no other functions (such as storage or packing) is to be performed on the material, the 'Move' record is deleted. If the cart is an empty, 'Conveyance' is updated with the current location. If material is unloaded or loaded at this station, 'Conveyance' is updated to dissolve the chain.

If the arriving cart is one of a chain, the 'Chain' record is updated. Once the last of the carts on a chain has arrived, the 'Chain' record is dissolved for most EDC workstations. An example of an exception is certain spurs in the Receiving area that are transfers between loops.

3.2.18.5.5.1.2 **L5212.PN - Update For Cart At Workstation**

Process Name	Process ID #	Date
Update For Cart At Workstation	L5212.PN	November 6, 1997

Requirement ID #(s)

SECS-RC1.1, SECS-RC1.1.10, SECS-RC1.2, SECS-RC1.3, SECS-RC1.4, SECS-RC3.1, SECS-RC4.3, SECS-RC5

Process Narrative

This process receives a transaction from the PLC when the cart is positioned at a weigh station or automatic workstation. This is when ECS needs notification that the cart is positioned for workstation operations.

If the cart is at an Unloader, the empty cart is either directed to a loader in the same area, or empty cart management is notified to move the empty. If needed, a message is sent to the Pallet Conveyor Subcontroller (W.DFD) via the Traffic Subcontroller (T.DFD) to move the pallet after it has been transferred.

If the cart is located at a Loader and there is a load ready to be moved, the Move Towline Cart (L56.PN) process is notified to move the cart when the transfer has finished.

If the cart is located at the M/H queues, the Manage M/H Queue process (L541.PN) is notified that the cart is at the merge stop. However, if the cart is a second or subsequent cart of a chain, the cart is moved to its destination by a request to the Move Towline Cart (L56.PN) process. The ‘Cart Queue’, ‘Conveyance’, and ‘Move’ database tables are updated. If the cart is part of a chain, the ‘Chain’ database table is updated as well.

If the cart is located at the Intradepot queues, the Intradepot queue process is notified that the cart is at the merge stop. However, if the cart is a second or subsequent cart of the entire queue spur being released, the cart is moved to its destination by a request to the Move Towline Cart (L56.PN) process.

If the cart is at the Totebox Stacker, it is queued to empty cart management, which delivers the stack of totes on the cart to one of the assigned destinations.

3.2.18.5.5.1.3 **L5213.PN - Update For Missed Divert**

Process Name	Process ID #	Date
Update For Missed Divert	L5213.PN	November 6, 1997

Requirement ID #(s)

SECS-RC1.1, SECS-RC1.1.10, SECS-RC1.2, SECS-RC1.3, SECS-RC1.4, SECS-RC3.1, SECS-RC4.3, SECS-RC5

Process Narrative

This process receives a transaction from the PLC via Towline Message Buffering (L4.PN) when the towline cart misses its assigned destination. Misdiverted carts may be redirected through <Move Cart> transactions.

When the transaction is received from the PLC, depending on the location, this process may ignore the missed divert and the PLC will recirculate the cart around the loop back to the assigned destination. It may also update 'Conveyance' to get the cart to the assigned location by another path if possible. If the misdivert is at a spur of a multiple spur area, the cart is sent to another spur within the same area. If the cart is part of a chain, this process will also send a cart back to its original destination indefinitely.

This process also plays an important role in the management of standard empty carts. When workload level or variations cause a spur to become full so that a missed divert is received for the empty cart, this routine determines a downstream destination for the cart. If the downstream area is also full, another missed divert is received. The empty cart continues to circulate in this manner until it reaches an area where it is needed.

3.2.18.5.5.2 **L522.DFD**

Process ID #	Date
L522.DFD Manage Towline Status Changes Page 1 of 3	November 6, 1997

Requirement ID #(s)

SECS-RC1.1, SECS-RC1.1.10, SECS-RC1.2, SECS-RC1.3, SECS-RC1.4, SECS-RC3.1, SECS-RC4.3, SECS-RC5

Data Flow Diagram

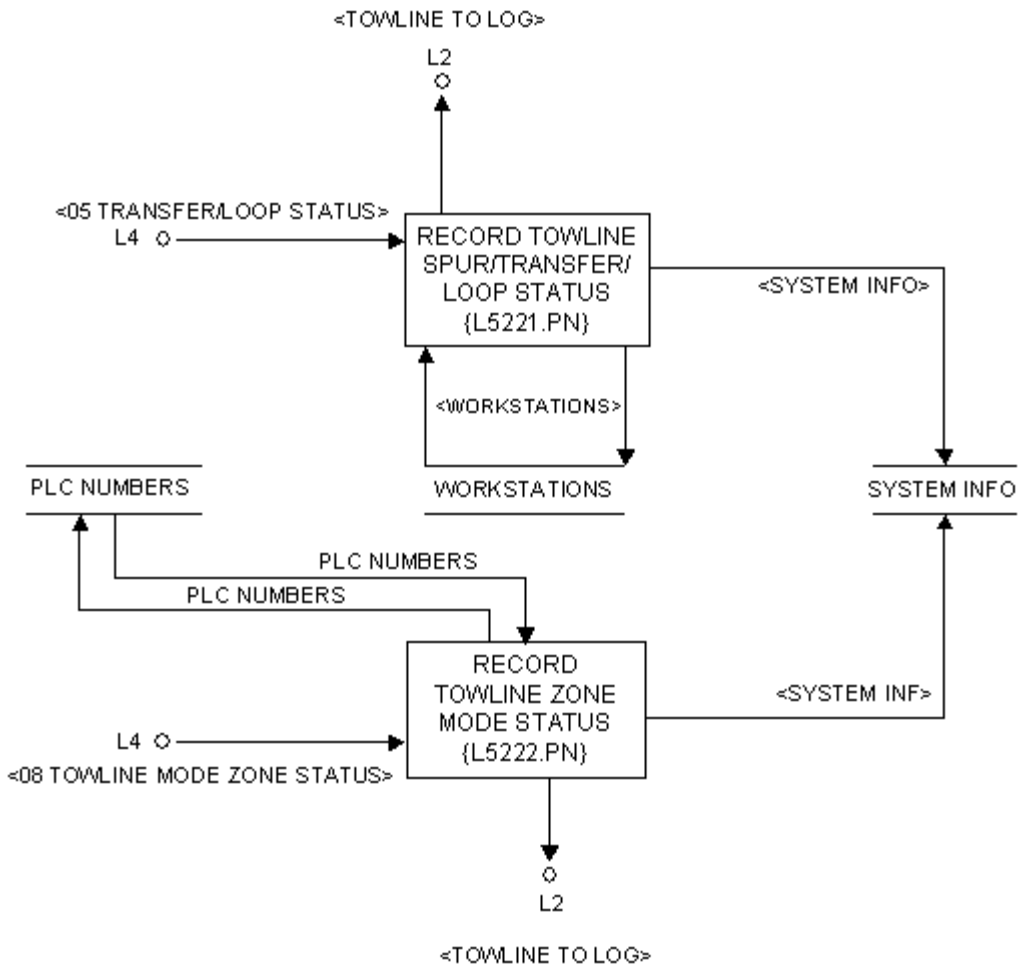

Process ID #	Date
L522.DFD Manage Towline Status Changes Page 2 of 3	November 6, 1997

Requirement ID #(s)

SECS-RC1.1, SECS-RC1.1.10, SECS-RC1.2, SECS-RC1.3, SECS-RC1.4, SECS-RC3.1, SECS-RC4.3, SECS-RC5

Data Flow Diagram

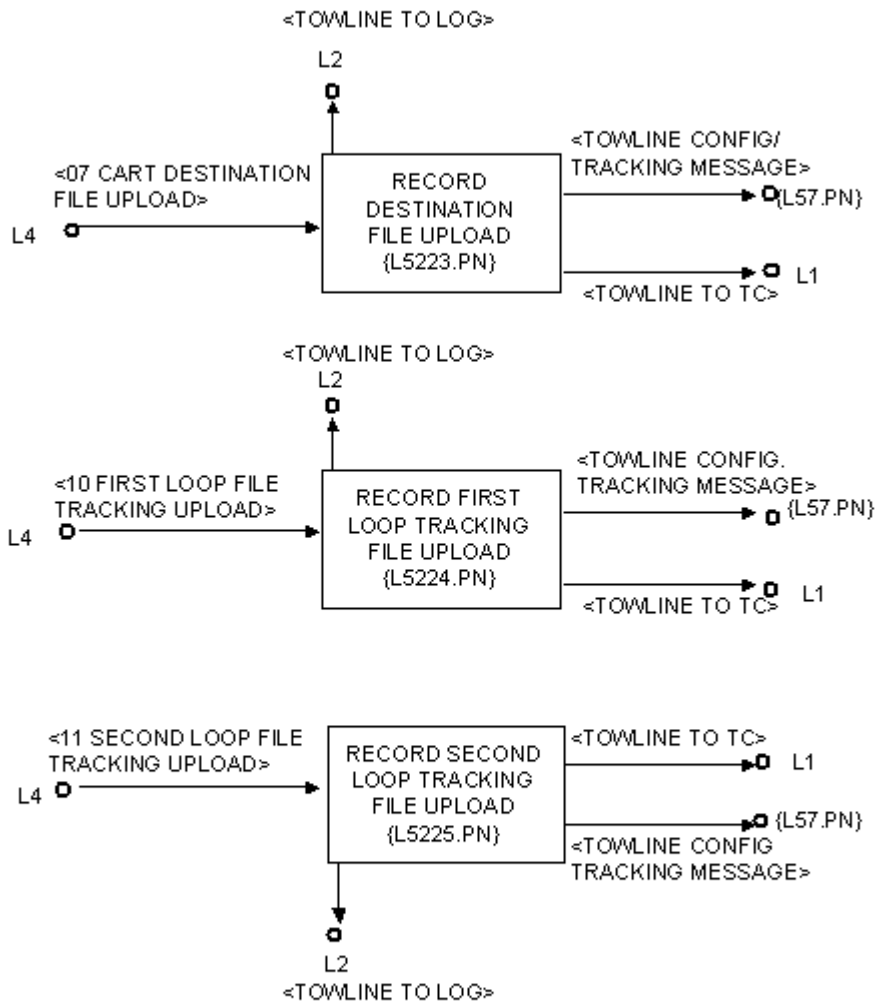

Process ID #	Date
L522.DFD Manage Towline Status Changes Page 3 of 3	November 6, 1997

Requirement ID #(s)

SECS-RC1.1, SECS-RC1.1.10, SECS-RC1.2, SECS-RC1.3, SECS-RC1.4, SECS-RC3.1, SECS-RC4.3, SECS-RC5

Data Flow Diagram

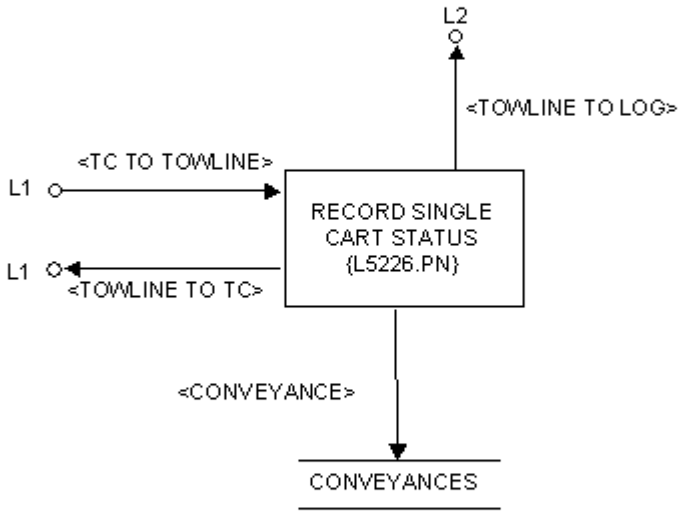

3.2.18.5.5.2.1 **L5221.PN - Record Towline Spur/Transfer/Loop Status**

Process Name	Process ID #	Date
Record Towline Spur/ Transfer/Loop Status	L5221.PN	November 6, 1997

Requirement ID #(s)

SECS-RC1.1, SECS-RC1.1.10, SECS-RC1.2, SECS-RC1.3, SECS-RC1.4, SECS-RC3.1, SECS-RC4.3, SECS-RC5

Process Narrative

This process receives a Towline to ECS message from the PLC that conveys the new status. The process will update 'Workstation' to reflect the status change. The received message will provide ECS with the following spur status:

- enabled,
- disabled,
- faulted,
- full,
- empty, or
- locked for a chain.

When the spur status changes to Enabled or Unlocked, Manage Empty Carts (L542.PN) is called and 'System Info' shared memory is updated.

This process sends a formatted message to the Towline Message Logger (L2.PN) for possible logging.

3.2.18.5.5.2.2 **L5222.PN - Record Towline Zone Mode Status**

Process Name	Process ID #	Date
Record Towline Zone Mode Status	L5222.PN	November 6, 1997

Requirement ID #(s)

SECS-RC1.1, SECS-RC1.1.10, SECS-RC1.2, SECS-RC1.3, SECS-RC1.4, SECS-RC3.1, SECS-RC4.3, SECS-RC5

Process Narrative

This process receives a 08 TOWLINE MODE ZONE STATUS message from the Towline Message Buffering process (L4.PN). It updates the 'PLC Number' table and the 'System Info' with the new status of the towline PLC.

This process sends a formatted message to the Towline Message Logger (L2.PN) for possible logging.

3.2.18.5.5.2.3 **L5223.PN - Record Cart Destination File Upload**

Process Name	Process ID #	Date
Record Cart Destination File Upload	L5223.PN	November 6, 1997

Requirement ID #(s)

SECS-RC1.1, SECS-RC1.1.10, SECS-RC1.2, SECS-RC1.3, SECS-RC1.4, SECS-RC3.1, SECS-RC4.3, SECS-RC5

Process Narrative

This process receives a 07 CART DESTINATION FILE UPLOAD message from the Towline Buffering process (L4.PN). It sends a TOWLINE CONFIG/TRACKING MESSAGE to the Towline PLC Configuration/Tracking File Logger process (L57.PN). It also notifies the User Interface (U.DFD) that a response has been received from a User Interface (U.DFD) upload request by sending the Traffic Controller (T.DFD) a TOWLINE TO TC message.

This process sends a formatted message to the Towline Message Logger (L2.PN) for possible logging.

3.2.18.5.5.2.4 **L5224.PN - Record First Loop Tracking File Upload**

Process Name	Process ID #	Date
Record First Loop Tracking File Upload	L5224.PN	November 6, 1997

Requirement ID #(s)

SECS-RC1.1, SECS-RC1.1.10, SECS-RC1.2, SECS-RC1.3, SECS-RC1.4, SECS-RC3.1, SECS-RC4.3, SECS-RC5

Process Narrative

This process receives a 10 FIRST LOOP TRACKING FILE UPLOAD message from the Towline Buffering process (L4.PN). It sends a TOWLINE CONFIG/TRACKING MESSAGE to the Towline PLC Configuration/Tracking File Logger process (L57.PN). It also notifies the User Interface (U.DFD) that a response has been received from a User Interface (U.DFD) upload request by sending the Traffic Controller (T.DFD) a TOWLINE TO TC message.

This process sends a formatted message to the Towline Message Logger (L2.PN) for possible logging.

3.2.18.5.5.2.5 **L5225.PN - Record Second Loop Tracking File Upload**

Process Name	Process ID #	Date
Record Second Loop Tracking File Upload	L5225.PN	November 6, 1997

Requirement ID #(s)

SECS-RC1.1, SECS-RC1.1.10, SECS-RC1.2, SECS-RC1.3, SECS-RC1.4, SECS-RC3.1, SECS-RC4.3, SECS-RC5

Process Narrative

This process receives aNn11 SECOND LOOP TRACKING FILE UPLOAD message from the Towline Buffering process (L4.PN). It sends a TOWLINE CONFIG/TRACKING MESSAGE to the Towline PLC Configuration/Tracking File Logger process (L57.PN). It also notifies the User Interface (U.DFD) that a response has been received from a User Interface (U.DFD) upload request by sending the Traffic Controller (T.DFD) a TOWLINE TO TC message.

This process sends a formatted message to the Towline Message Logger (L2.PN) for possible logging.

3.2.18.5.5.2.6 **L5226.PN - Record Single Cart Status**

Process Name	Process ID #	Date
Record Single Cart Status	L5226.PN	November 6, 1997

Requirement ID #(s)

SECS-RC1.1, SECS-RC1.1.10, SECS-RC1.2, SECS-RC1.3, SECS-RC1.4, SECS-RC3.1, SECS-RC4.3, SECS-RC5

Process Narrative

This process receives a 13 CART INFORMATION REQUEST REPLY message from the Towline Buffering process (L4.PN). It updates the 'Conveyance' database table with new values for PLC destination, chain ID, and recirculation count. It also notifies the User Interface (U.DFD) that a response has been received from a User Interface (U.DFD) request cart information message by sending the Traffic Controller (T.DFD) a TOWLINE TO TC message.

This process sends a formatted message to the Towline Message Logger (L2.PN) for possible logging.

3.2.18.5.6 **L53.DFD**

Process ID #	Date
L53.DFD Manage Keypad Interface Transactions Page 1 of 2	November 6, 1997

Requirement ID #(s)

SECS-RC1.1, SECS-RC1.1.10, SECS-RC4.3, SECS-RC5, SECS-RC12.4

Data Flow Diagram

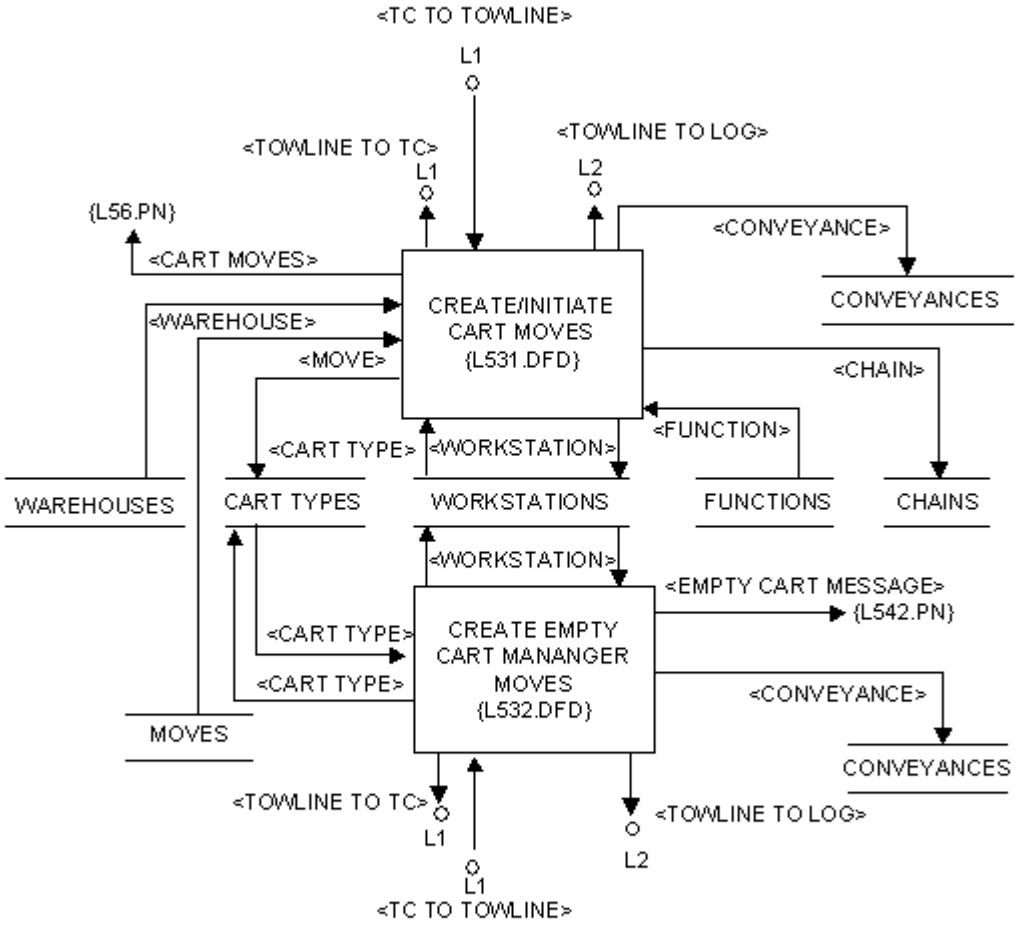

Process ID #	Date
L53.DFD Manage Keypad Interface Transactions (Page 2 of 2)	November 6, 1997

Requirement ID #(s)

SECS-RC1.1, SECS-RC1.1.10, SECS-RC4.3, SECS-RC5, SECS-RC12.4

Data Flow Diagram

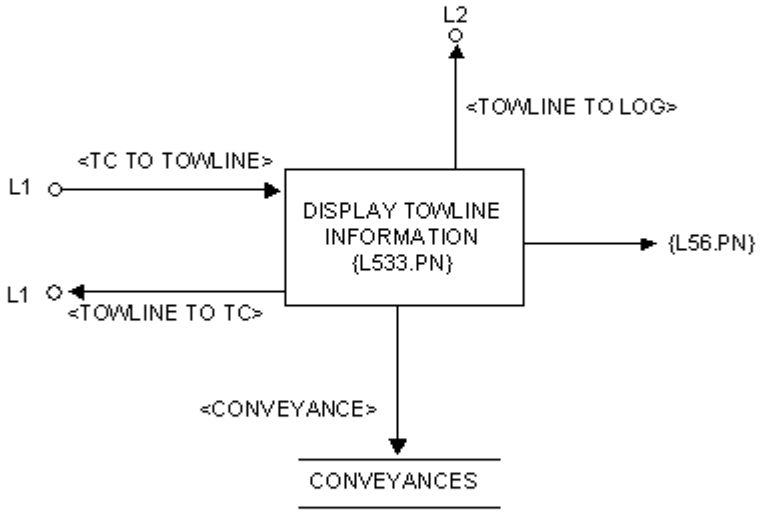

3.2.18.5.6.1 **L531.DFD**

Process ID #	Date
L531.DFD Create/Initiate Cart Moves Page 1 of 3	November 6, 1997

Requirement ID #(s)

SECS-RC1.1, SECS-RC1.1.10, SECS-RC4.3, SECS-RC5, SECS-RC12.4

Data Flow Diagram

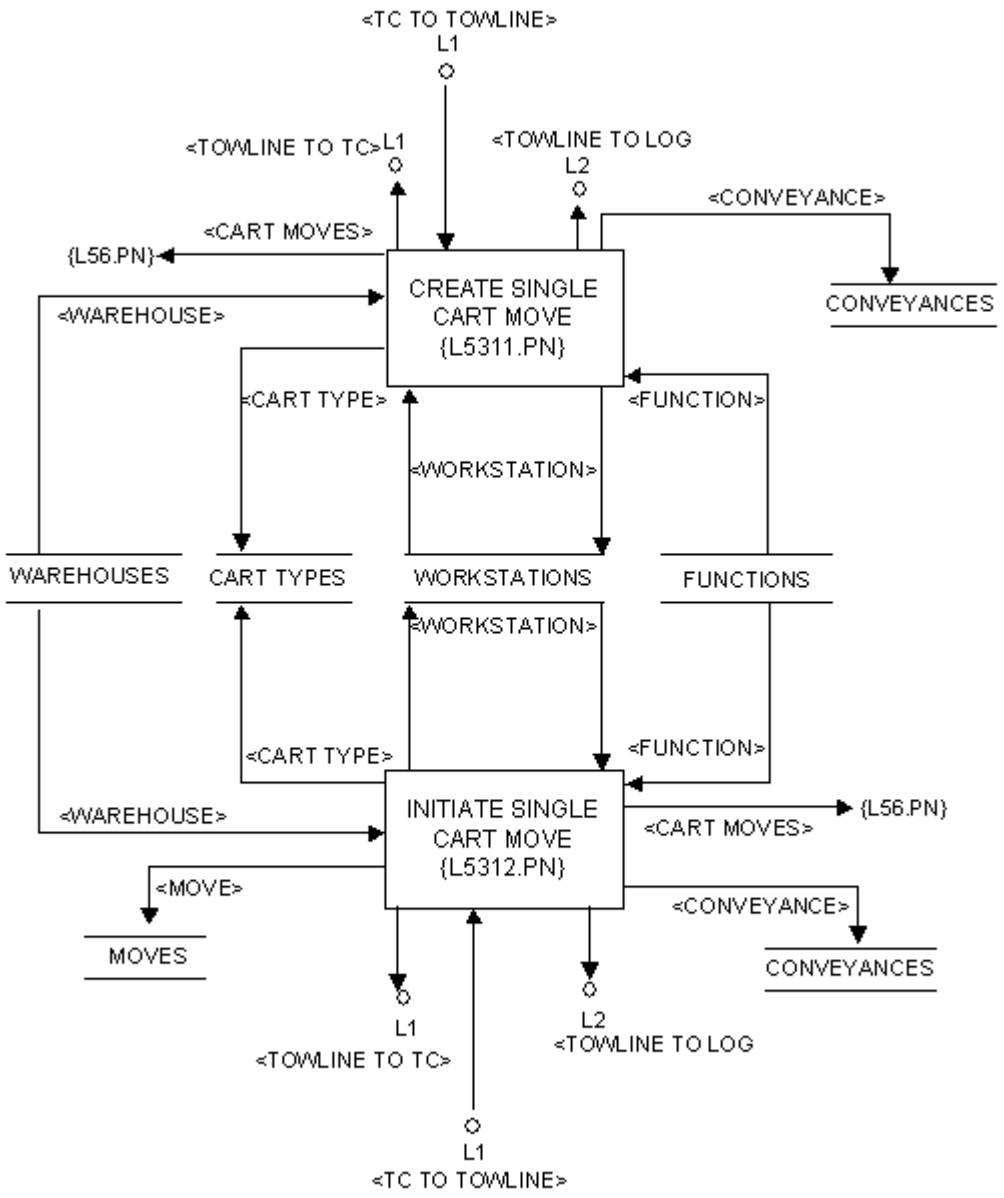

Process ID #	Date
L531.DFD Create/Initiate Cart Moves Page 2 of 3	November 6, 1997

Requirement ID #(s)
SECS-RC1.1, SECS-RC1.1.10, SECS-RC4.3, SECS-RC5, SECS-RC12.4

Data Flow Diagram

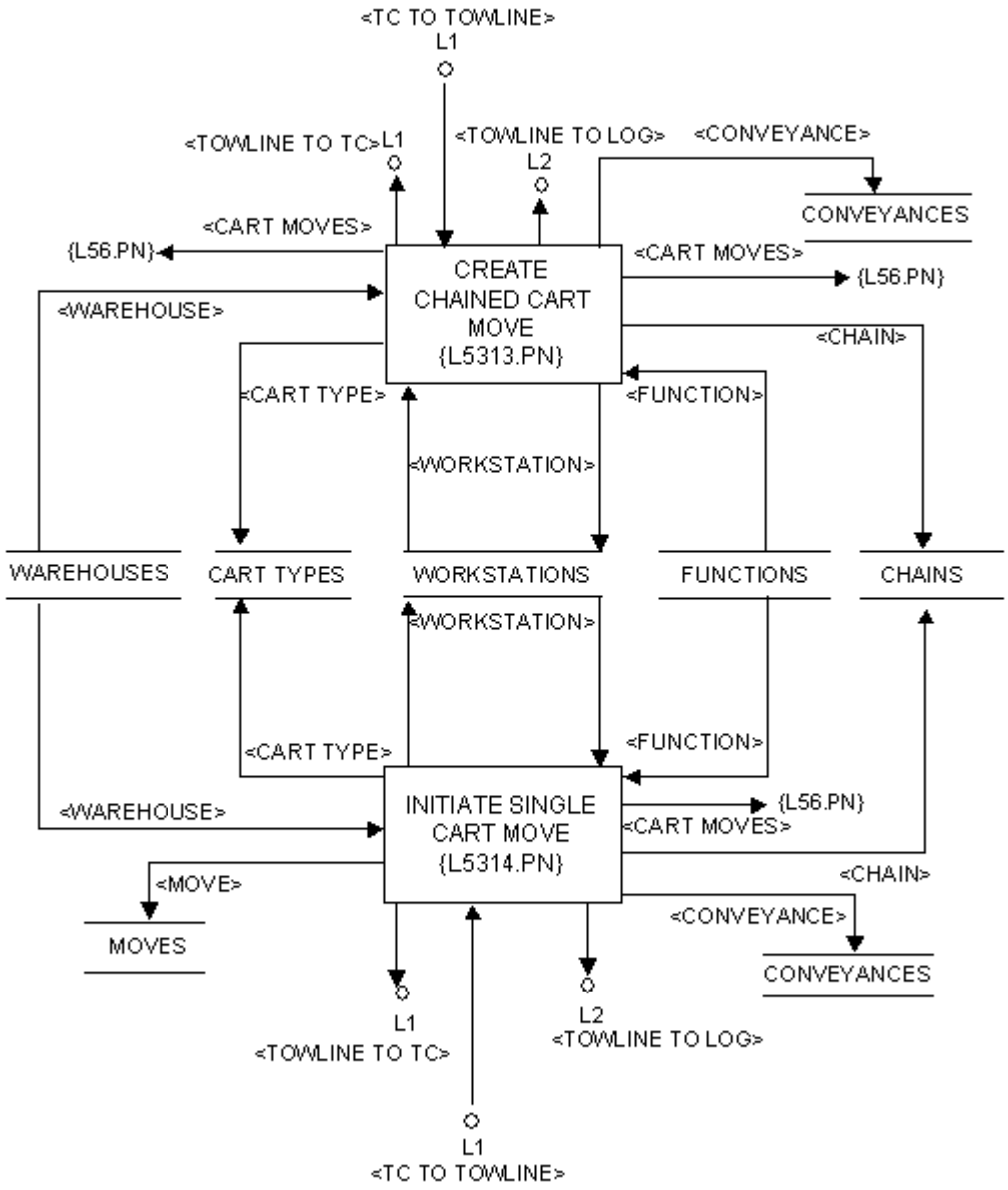

Process ID #	Date
L531.DFD Create/Initiate Cart Moves Page 3 of 3	November 6, 1997

Requirement ID #(s)
SECS-RC1.1, SECS-RC1.1.10, SECS-RC4.3, SECS-RC5, SECS-RC12.4

Data Flow Diagram

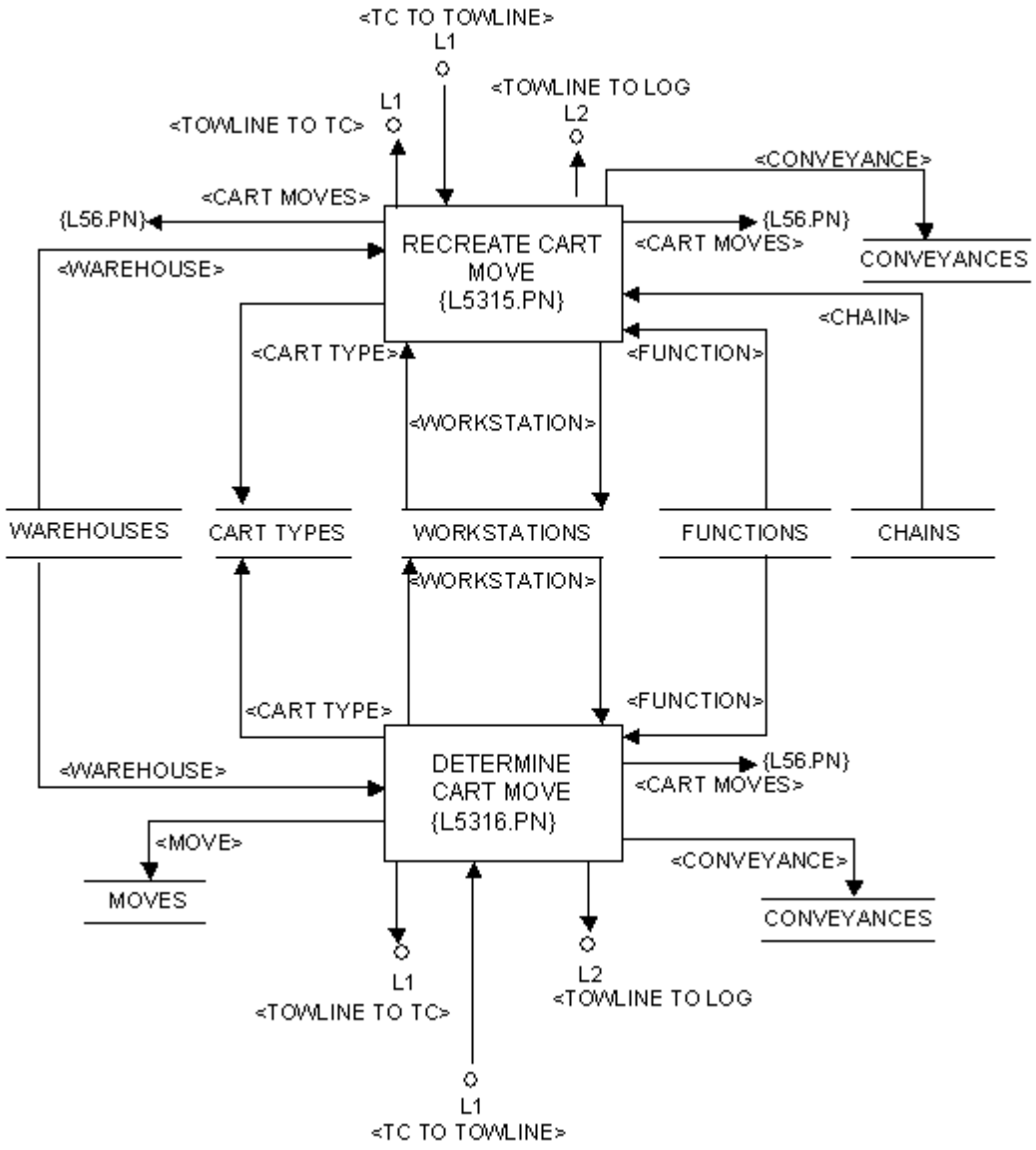

3.2.18.5.6.1.1 **L5311.PN - Create Single Cart Move**

Process Name	Process ID #	Date
Create Single Cart Move	L5311.PN	November 6, 1997

Requirement ID #(s)
SECS-RC1.1, SECS-RC1.1.10, SECS-RC4.3, SECS-RC5, SECS-RC12.4

Process Narrative

This process accepts an M01 from the Keypad Subcontroller (K.DFD) from the Towline Traffic Controller Communications (L1.DFD) to move a single cart by calling Move Towline Cart (L56.PN). A Towline to TC message is returned to the Towline Traffic Controller Communications (L1.DFD) to indicate status of the request to move a single cart.

The material being transported on the cart does not have a control number associated with it. An example of this type of material is a non-chained movement of material before Receipt Entry.

This process will read and/or update the following database tables, depending on the exact route:

- ‘Warehouse’,
- ‘Cart Type’,
- ‘Move’,
- ‘Workstation’,
- ‘Function’, or
- ‘Conveyance’.

This process sends a formatted message to the Towline Message Logger (L2.PN) for possible logging.

3.2.18.5.6.1.2 **L5312.PN - Initiate Single Cart Move**

Process Name	Process ID #	Date
Initiate Single Cart Move	L5312.PN	November 6, 1997

Requirement ID #(s)
SECS-RC1.1, SECS-RC1.1.10, SECS-RC4.3, SECS-RC5, SECS-RC12.4

Process Narrative

This process accepts an M01 from the Keypad Subcontroller (K.DFD) via the Traffic Subcontroller (T.DFD) to move a single cart by calling Move Towline Cart (L56.PN). The material being transported on the cart does have a control number associated with it, which is the case for most movements after the material has been identified at Receipt Entry.

This process will read and/or update the following database tables, depending on the exact route:

- ‘Warehouse’,
- ‘Cart Type’,
- ‘Move’,
- ‘Workstation’,
- ‘Function’, or
- ‘Conveyance’.

This process sends a formatted message to the Towline Message Logger (L2.PN) for possible logging.

3.2.18.5.6.1.3 **L5313.PN - Create Chained Cart Move**

Process Name	Process ID #	Date
Create Chained Cart Move	L5313.PN	November 6, 1997

Requirement ID #(s)
SECS-RC1.1, SECS-RC1.1.10, SECS-RC4.3, SECS-RC5, SECS-RC12.4

Process Narrative

This process accepts an M01 from the Keypad Subcontroller (K.DFD) via the Traffic Subcontroller (T.DFD) to move a chain of cart by calling Move Towline Cart (L56.PN). The material being transported on the cart does not have a control number associated with it. An example of this type of material is all chained movement of material before Receipt Entry.

This process will read and/or update the following database tables, depending on the exact route:

- ‘Warehouse’,
- ‘Cart Type’,
- ‘Chain’,
- ‘Workstation’,
- ‘Function’, or
- ‘Conveyance’.

This process sends a formatted message to the Towline Message Logger (L2.PN) for possible logging.

3.2.18.5.6.1.4 **L5314.PN - Initiate Chained Cart Move**

Process Name	Process ID #	Date
Initiate Chained Cart Move	L5314.PN	November 6, 1997

Requirement ID #(s)
SECS-RC1.1, SECS-RC1.1.10, SECS-RC4.3, SECS-RC5, SECS-RC12.4

Process Narrative

This process accepts an M01 from the Keypad Subcontroller (K.DFD) through the Towline Traffic Controller Communications (L1.DFD) to move a chain of cart by calling Move Towline Cart (L56.PN). The material being transported on the cart has a control number associated with it. An example of this is all chained movement of material before Receipt Entry.

This process will read and/or update the following database tables, depending on the exact route:

- ‘Warehouse’,
- ‘Cart Type’,
- ‘Chain’,
- ‘Move’,
- ‘Workstation’,
- ‘Function’, or
- ‘Conveyance’.

This process sends a formatted message to the Towline Message Logger (L2.PN) for possible logging.

3.2.18.5.6.1.5 **L5315.PN - Recreate Cart Move**

Process Name	Process ID #	Date
Recreate Cart Move	L5315.PN	November 6, 1997

Requirement ID #(s)
SECS-RC1.1, SECS-RC1.1.10, SECS-RC4.3, SECS-RC5, SECS-RC12.4

Process Narrative

This process accepts an M01 from the Keypad Subcontroller (K.DFD) through the Towline Traffic Controller Communications (L1.DFD) to process the request to recreate a cart move. This process will then call the process Move Towline Cart (L56.PN) to move the cart using the movement created with this conversation.

This process will read and/or update the following database tables, depending on the exact route:

- ‘Warehouse’,
- ‘Cart Type’,
- ‘Chain’,
- ‘Move’,
- ‘Workstation’,
- ‘Function’, or
- ‘Conveyance’.

This process sends a formatted message to the Towline Message Logger (L2.PN) for possible logging.

3.2.18.5.6.1.6 **L5316.PN - Determine Material Destination**

Process Name	Process ID #	Date
Determine Material Destination	L5316.PN	November 6, 1997

Requirement ID #(s)
SECS-RC1.1, SECS-RC1.1.10, SECS-RC4.3, SECS-RC5, SECS-RC12.4

Process Narrative

This process accepts an M01 from the Keypad Subcontroller (K.DFD) through the Towline Traffic Controller Communications (L1.DFD) to move a single cart by calling Move Towline Cart (L56.PN). The material that needs moved is found at Intradepot Shipping NE, Intradepot Shipping NW, or Intradepot Receiving. (Note: at this time Intradepot Receiving is not used for inbound material flow, however it is listed here in the event that it would be used for inbound flow.)

This process will read and/or update the following database tables, depending on the exact route:

- ‘Warehouse’,
- ‘Cart Type’,
- ‘Chain’,
- ‘Move’,
- ‘Workstation’,
- ‘Function’, or
- ‘Conveyance’.

This process sends a formatted message to the Towline Message Logger (L2.PN) for possible logging.

3.2.18.5.6.2 **L532.PN - Create Empty Cart Manager Moves**

Process ID #	Date
L532.DFD Create Empty Cart Manager Moves	November 6, 1997

Requirement ID #(s)
SECS-RC1.1, SECS-RC1.1.10, SECS-RC4.3, SECS-RC5, SECS-RC12.4

Data Flow Diagram

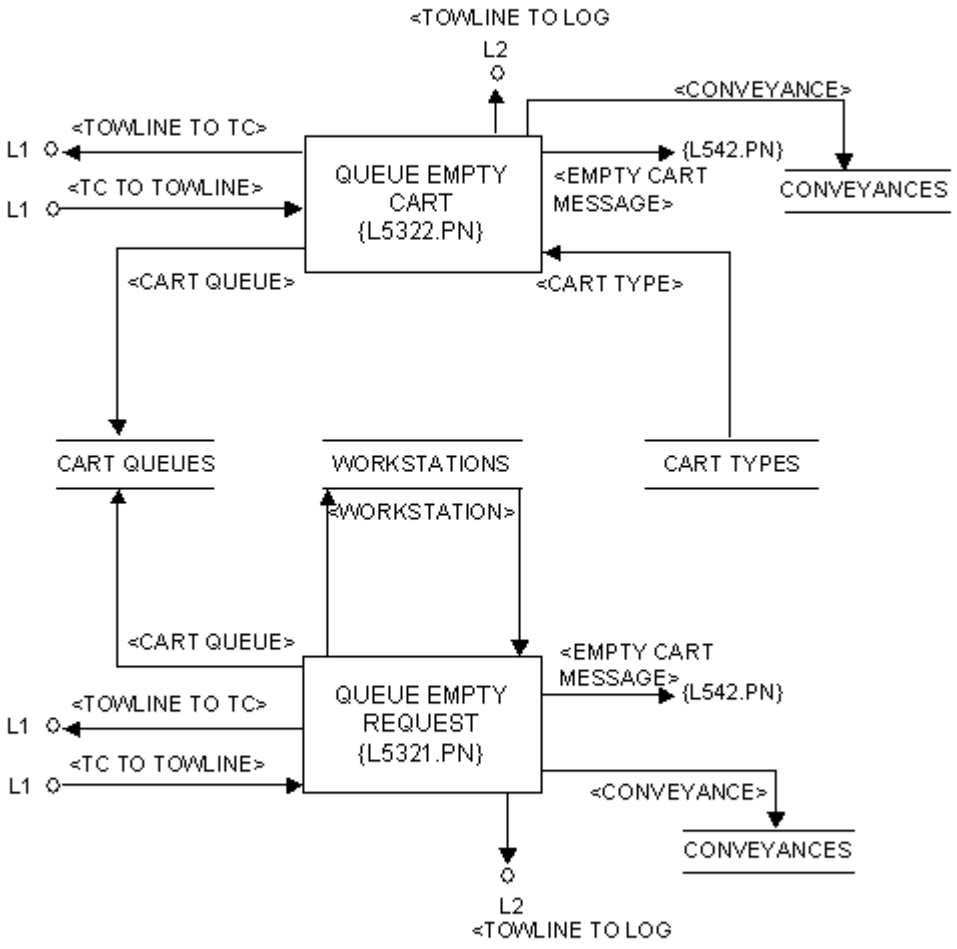

3.2.18.5.6.2.1 **L5321.PN - Queue Empty Request**

Process Name	Process ID #	Date
Queue Empty Request	L5321.PN	November 6, 1997

Requirement ID #(s)
SECS-RC1.1, SECS-RC1.1.10, SECS-RC4.3, SECS-RC5, SECS-RC12.4

Process Narrative

This process accepts a T01 from the Keypad Subcontroller (K.DFD) via the Traffic Subcontroller (T.DFD). This message informs the process that an operator is in need of a special type of cart at the identified workstation. The process will read the 'Workstation' and 'Cart Queues' to find an available cart to fill the request. Then this process will format and send a message to Manage Empty Carts (L542.PN) to have the request filled.

This process sends a formatted message to the Towline Message Logger (L2.PN) for possible logging.

3.2.18.5.6.2.2 **L5322.PN - Queue Empty Cart**

Process Name	Process ID #	Date
Queue Empty Cart	L5322.PN	November 6, 1997

Requirement ID #(s)

SECS-RC1.1, SECS-RC1.1.10, SECS-RC4.3, SECS-RC5, SECS-RC12.4

Process Narrative

This process will receive a message (T03) from the Keypad Subcontroller (K.DFD) via the Traffic Subcontroller (T.DFD) to queue an empty cart. The process will then store the information about the empty cart in the "Cart Queues". The process Manage Empty Carts (L542.PN) will then take over the processing of the empty cart by reading the information stored in "Cart Queues".

This process sends a formatted message to the Towline Message Logger (L2.PN) for possible logging.

3.2.18.5.6.3 **L533.PN - Display Cart Routing**

Process Name	Process ID #	Date
Display Cart Routing	L533.PN	November 6, 1997

Requirement ID #(s)
SECS-RC1.1, SECS-RC1.1.10, SECS-RC4.3, SECS-RC5, SECS-RC12.4

Process Narrative

This process will receive a message (T05) from the Keypad Subcontroller (K.DFD) via the Towline Traffic Controller Communications (L2.PN) to request the route of a cart from one spur to another spur. This process will then determine the route of the cart. A message (U06) containing the route will then be formatted and sent to the Keypad Subcontroller (K.DFD) via the Traffic Subcontroller (T.DFD)

This process sends a formatted message to the Towline Message Logger (L2.PN) for possible logging

3.2.18.5.7 **L54.DFD**

Process ID #	Date
L54.DFD - Manage Cart Movement	November 6, 1997

Requirement ID #(s)

SECS-RC1.1, SECS-RC1.1.10, SECS-RC1.2, SECS-RC1.3, SECS-RC1.4, SECS-RC4.3, SECS-RC5

Data Flow Diagram

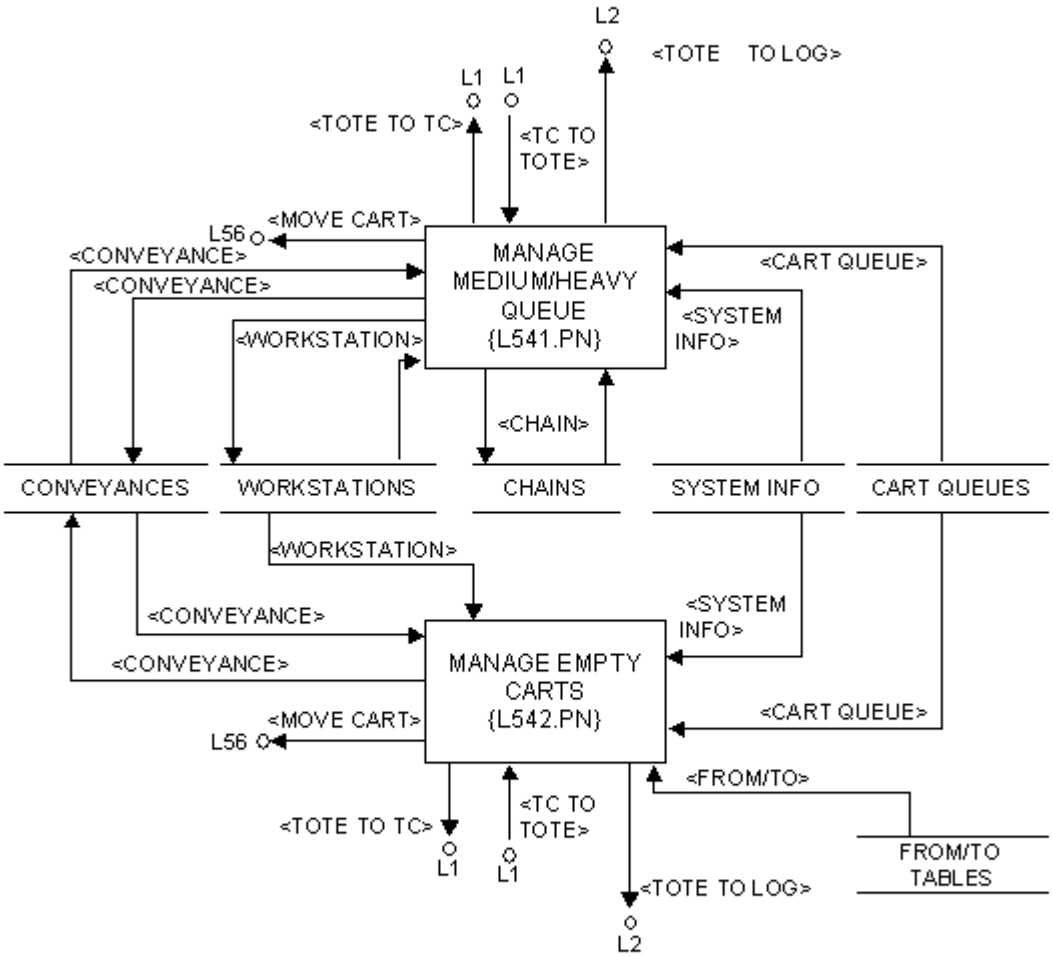

3.2.18.5.7.1 **L541.PN - Manage M/H Queues**

Process Name	Process ID #	Date
Manage M/H Queues	L541.PN	November 6, 1997

Requirement ID #(s)

SECS-RC1.1, SECS-RC1.1.10, SECS-RC1.2, SECS-RC1.3, SECS-RC1.4, SECS-RC4.3, SECS-RC5

Process Narrative

This process automatically releases carts from M/H pack queues. Material is moved into the Medium/Heavy pack queues by the following priority scheme:

- 1 = DUE TODAY,
- 2 = PAST DUE,
- 3 = DUE TOMORROW,
- 4 = DUE AFTER TOMORROW.

Then the material is moved into the correct priority spur through the Move Towline Cart (L56.PN) process.

Material is released from the M/H queues based on the priority of the queue when space on a M/H pack conveyor becomes available. If there is a cart with an operator override condition (see L5122.PN), it is released first. The 'Cart Queue' records are then scanned in priority order for pending moves. Following the override condition, carts in a priority one spur are released, then carts from priority 2, then priority 3, and finally priority 4.

Carts are released from a queue when space becomes available at the M/H pack stations. (This is determined by reading the count and status at the pack stations from 'Workstation'. When multiple pack stations have space available, the carts are distributed across all stations. When a chain of carts is scheduled to be released, a pack station with sufficient room for the chain is chosen for the destination. The chained carts are released consecutively and the destination pack station is locked until the last cart in the chain arrives.

If there is not room for the chain at any of the Pack Stations, this process determines the pack station with the most room and reserves the station for the chain. When room for the entire chain becomes available, the chain is released to the pack station.

This process sends a formatted message to the Towline Message Logger (L2.PN) for possible logging.

3.2.18.5.7.2 **L542.PN - Manage Empty Carts**

Process Name	Process ID #	Date
Manage Empty Carts Page 1 of 2	L542.PN	November 6, 1997

Requirement ID #(s)

SECS-RC1.1, SECS-RC1.1.10, SECS-RC1.2, SECS-RC1.3, SECS-RC1.4, SECS-RC4.3, SECS-RC5

Process Narrative

This process controls the movement of all empty carts in the system. When a cart becomes empty the Cart ID is put in the 'Cart Queues' database tables by other processes. This process reads 'Cart Queues' and determines the next destination for the cart.

For standard roller bed carts, the algorithm used to determine the destination for the empty cart first checks for a need at automatic loader stations in the area, then determines if any operator requests exist in the area, and finally checks the defined From/To material flow destinations.

For all special purpose carts (like empty caged carts and empty totebox carts), the algorithm used to determine the destination is the same as for regular carts with one exception. The special purpose cart algorithm does not consider the automatic loaders as a possible destination. The cart distributions to these requirements is as follows:

a. Automatic Loaders: This process maintains a queue of empty carts at the automatic loaders to assure that a load does not wait on the end of a pallet conveyor. The count of empty carts at a loader spur is read from 'Workstation'. If there is room in the loader spur, this process dispatches the empty cart to that loader (if the empty is a standard roller bed cart).

b. Operator Requests: If the empty cart is not needed at a loader in the area, 'Cart Queue' and any associated 'Workstation' are read to determine if an operator in the area has requested an empty cart. If an empty request exists for the cart type at this source workstation, the available empty is delivered to the requesting workstation.

c. From/To Tables: If the empty is not needed at a loader and there is not an operator request in the area, the destination for the empty cart is determined from a From/To file. For every workstation, default destination(s) are defined which attempt an even distribution of the empty carts. Where there are multiple destinations defined for the workstation, carts will be delivered based on the percentages defined by the From/To Tables. If carts are not to be delivered except upon an operator request, the 'to' workstation is flagged as an operator request station only.

Process Name	Process ID #	Date
Manage Empty Carts Page 2 of 2	L542.PN	November 6, 1997

Requirement ID #(s)

SECS-RC1.1, SECS-RC1.1.10, SECS-RC1.2, SECS-RC1.3, SECS-RC1.4, SECS-RC4.3, SECS-RC5

Process Narrative

Once the destination for the empty cart has been determined, a ‘Conveyance’ record is created for the cart. The Move Towline Cart (L56.PN) process reads the ‘Conveyance record and initiates the move.

This process sends a formatted message to the Towline Message Logger (L2.PN) for possible logging.

3.2.19 **K.DFD**

Process ID #	Date
K.DFD - Keypad Subcontroller	October 1997

Requirement ID #(s)

SECS-RC1.1, SECS-RC1.4, SECS-RC3.1, SECS-RC4.2, SECS-RC4.3, SECS-RC12.4

Data Flow Diagram

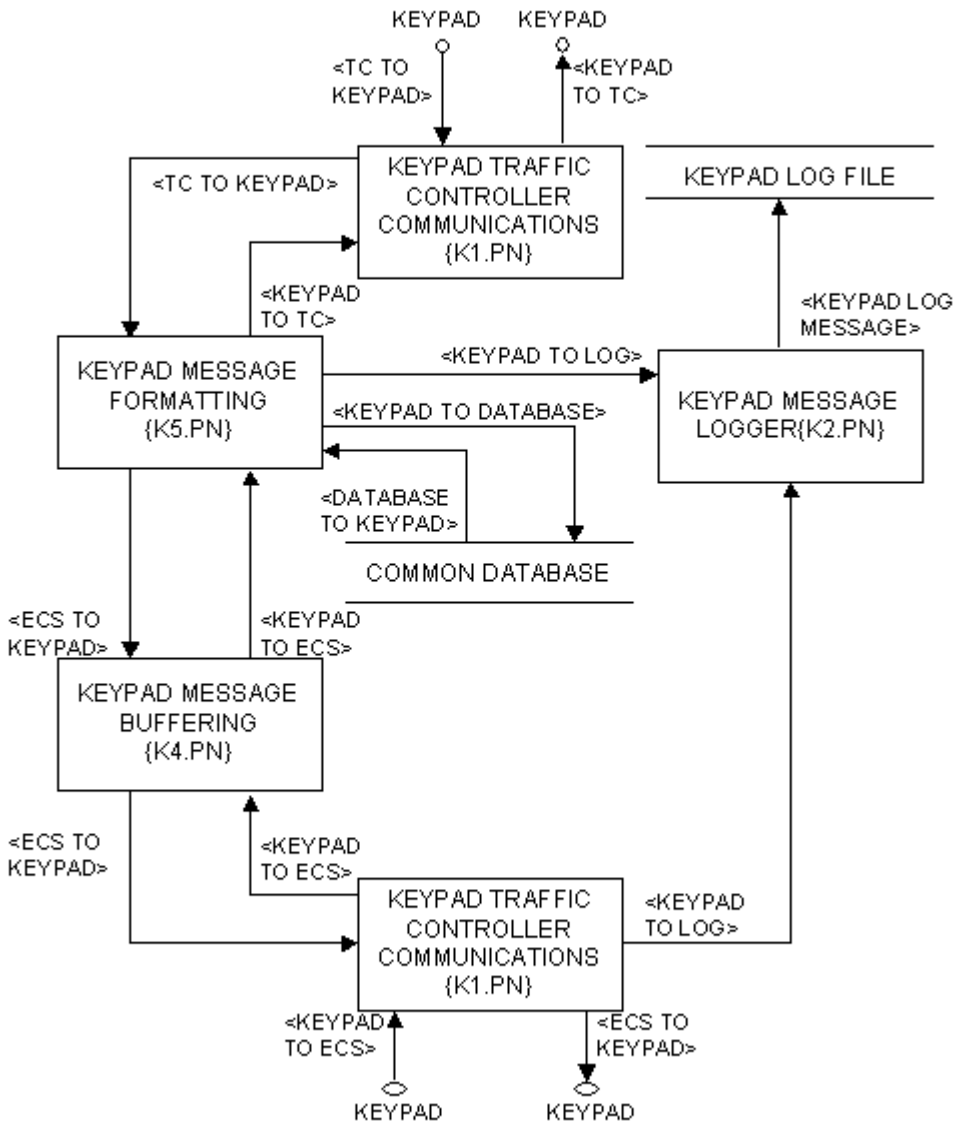

3.2.19.1 K1.PN - Keypad Traffic Controller Communications

Process Name	Process ID #	Date
Keypad Traffic Controller Communications	K1.PN	November 6, 1997

Requirement ID #(s)
SECS-RC1.1, SECS-RC1.4, SECS-RC3.1, SECS-RC12.4

Process Narrative

This process receives messages from the Traffic Controller (T.DFD) and passes them onto the Keypad Message Formatting (K5.PN) process. This process receives response and status messages from the Keypad Message Formatting (K5.PN) process and sends them to the Traffic Controller (T.DFD). This process handles all message transfer protocols and handshaking between the Traffic Controller (T.DFD) and the subcontroller (K.DFD). This process handles the message transmission.

3.2.19.2 K2.PN - Keypad Message Logger

Process Name	Process ID #	Date
Keypad Message Logger	K2.PN	November 6, 1997

Requirement ID #(s)
SECS-RC1.1, SECS-RC4.2, SECS-RC4.3, SECS-RC12.4

Process Narrative

This process receives messages from the Keypad Message Formatting (K5.PN) process and the Keypad Device Communications (K3.PN) process and logs messages to the Keypad Log File if logging is enabled.

3.2.19.3 K3.PN - Keypad Device Communications

Process Name	Process ID #	Date
Keypad Device Communications	K3.PN	November 6, 1997

Requirement ID #(s)
SECS-RC1.1, SECS-RC1.4, SECS-RC12.4

Process Narrative

This process receives messages from the Keypad Message Buffering (K4.PN) process and transmits them to the Keypad Controller (K.DFD). This process receives acknowledgments and status responses from the Keypad Controller (K.DFD) and forwards them to the Keypad Message Buffering (K4.PN) process for further processing. This process sends device messages to the Keypad Message Logger (K2.PN) process for logging. This process handles all transfer protocols and handshaking required by the device communications.

3.2.19.4 K4.PN - Keypad Message Buffering

Process Name	Process ID #	Date
Keypad Message Buffering	K4.PN	November 6, 1997

Requirement ID #(s)
SECS-RC1.1, SECS-RC4.2, SECS-RC4.3, SECS-RC12.4

Process Narrative

This process will receive messages from the Keypad Message Formatting (K5.PN) process and the Keypad Device Communications (K3.PN) process and insert and extract the messages to and from their respective queues.

3.2.19.5 K5.PN - Keypad Message Formatting

Process Name	Process ID #	Date
Keypad Message Formatting	K5.PN	November 6, 1997

Requirement ID #(s)
SECS-RC1.1, SECS-RC1.4, SECS-RC3.1, SECS-RC4.2, SECS-RC4.3, SECS-RC12.4

Process Narrative

This process receives messages from the Keypad Traffic Controller Communications (K1.PN) process and formats them for transmission to the Keypad Controller. Messages are sent to the Keypad Message Logger (K2.PN) process for logging. Messages are receives from the Keypad Message Buffering Process (K4.PN) and forwarded to the Keypad Traffic Controller Communications (K1.PN) process for transmission to the Traffic Controller (T.DFD). This process also reads from and writes to the database.

3.2.20 Towline, Tote Conveyor and Utility Keypad Conversations

PN	Function Keys	Keypad Conversations
K51.PN	F8	(SEL) Select Menu
Towline		
K511.PN	F8 F1	(MOV) Towline Cart Movement
K5111.PN	F8 F1 F1	(CSC) Create Single Cart Move
K5113.PN	F8 F1 F3	(ISC) Initiate Single Cart Move
K5114.PN	F8 F1 F4	(ICC) Initiate Chained Cart Move
K512.PN	F8 F2	(CAR) Towline Cart Management
K5121.PN	F8 F2 F1	(DMD) Determine Material Destination
K5122.PN	F8 F2 F2	(QER) Queue Empty Request
K5123.PN	F8 F2 F3	(QEC) Queue Empty Cart
K5124.PN	F8 F2 F4	(UCT) Update Cart Type
K5125.PN	F8 F2 F6	(RCM) Recreate Cart Move
Tote Conveyor		
K513.PN	F8 F6	(CKD) Tote Conveyor
K5131.PN	F8 F6 F1	(CST) Create Single Tote Move
K5133.PN	F8 F6 F3	(IST) Initiate Single Tote Move
Utilities		
K514.PN	F8 F7	(UTL) Utility
K5141.PN	F8 F7 F1	(KCA) Keypad Conversation Authorization
K5142.PN	F8 F7 F3	(DDR) Display Database Record
K5143.PN	F8 F7 F4	(RTE) Display Cart Routing
K5144.PN	F8 F7 F5	(SCL) Set Cart Location

3.2.20.1 K51.PN - [SEL] - Select Menu

```
SEL:  F1MOV F2CAR F6CKD
      F7UTL
```

Select Menu (Screen 1)

```
SEL: NOT AUTHORIZED_
```

Select Menu (Optional Screen 2)

Description:

The Select Menu allows the operator to select a sub menu. If the selected menu is not authorized at the current workstation, the optional screen 2 will be displayed, allowing the operator to enter another Function Key.

3.2.20.1.1 K511.PN - [MOV] - Towline Cart Movement

```
MOV:  F1CSC F3ISC F4ICC
```

Towline Cart Movement (Screen 1)

```
MOV: NOT AUTHORIZED_
```

Towline Cart Movement (Optional Screen 2)

Description:

This display allows the operator to select conversations relating to cart movement. If the selected sub-menu is not authorized at the current workstation, the optional screen 2 will be displayed, allowing the operator to enter another Function Key.

3.2.20.1.1.1 **K5111.PN - [CSC] - Create Single Cart Move**

```
CSC:CART:____
¦¦¦¦¦¦¦¦¦¦¦¦¦¦¦¦¦¦¦¦¦¦¦¦¦¦
¦¦¦¦¦¦¦¦¦¦¦¦¦¦¦¦¦¦¦¦¦¦¦¦¦¦
```

Create Single Cart Move (Screen 1)

```
CSC:DEST(XXXX):____
¦¦¦¦¦¦¦¦¦¦¦¦¦¦¦¦¦¦¦¦¦¦¦¦¦¦
¦¦¦¦¦¦¦¦¦¦¦¦¦¦¦¦¦¦¦¦¦¦¦¦¦¦
```

Create Single Cart Move (Screen 2)

Description:

This conversation allows the operator to specify a cart to be moved. This is a cart that does not have a control number associated with it. The first screen prompts the operator for the Cart ID of the cart to be moved. If this is invalid, or if there is an error associated with the Cart ID, the error message will be displayed in the shaded portion of the screen. After the operator successfully enters a Cart ID, the next screen will be displayed. Valid error messages for screen 1 are:

- Invalid Cart ID,
- Cart ID Not Found,
- Cart is Offline,
- Cart Currently on Chain,
- Cart Currently in Use, and
- Cart NOT at this WKST.

The second screen for this conversation will display the default destination. The operator may confirm the displayed destination or may enter a new one. If the destination entered is invalid, the error message "Invalid Destination" will be displayed in the shaded portion of screen 2. After the operator has confirmed the default destination by pressing <ENTER> or successfully changed it, the move will be initiated by sending a message (M01) to the Towline Subcontroller (L.DFD) via the Traffic Subcontroller (T.DFD). Then screen 1 will be displayed. This sequence will continue until a valid Function Key is pressed.

3.2.20.1.1.2 **K5113.PN - [ISC] - Initiate Single Cart Move**

```
ISC:CART:____,CN:_____
```

Initiate Single Cart Move (Screen 1)

```
ISC:DEST(XXXX):____
```

Initiate Single Cart Move (Screen 2)

Description:

This conversation allows a cart with a control number to be moved. Screen 1 will prompt the operator for the Cart ID and for the Control Number of the material. If invalid information is entered, an error message will be displayed in the shaded area of screen 1. After the operator successfully enters a Cart ID and Control Number, screen 2 will be displayed. Valid error messages are:

- Invalid Cart ID,
- Cart ID Not Found,
- Cart is Offline,
- Cart Currently on Chain,
- Cart NOT at this WKST,
- Invalid Control Number, or
- Control Number Not Found.

Screen 2 will display the destination assigned to the material the operator requested to be moved. The operator may accept the displayed destination by pressing <ENTER>, or they may enter in a new one. If an invalid destination is entered, the error message "Invalid Destination" will be displayed in the shaded area of screen 2. Once the operator has confirmed the default destination, or successfully changed it, the move will be initiated by sending a message (M01) to the Towline Subcontroller (L.DFD) via the Traffic Subcontroller (T.DFD). Screen 1 will then be displayed.

This sequence will continue until another Function Key is pressed.

3.2.20.1.1.3 **K5114.PN - [ICC] - Initiate Chained Cart Move**

```
ICC:CART:____,CART:____
¦¦¦¦CART:____,CART:____
```

Initiate Chained Cart Move (Screen 1)

```
ICC:CN:_____
¦¦¦¦¦¦¦¦¦¦¦¦¦¦¦¦¦¦¦¦¦¦¦¦¦¦
```

Initiate Chained Cart Move (Screen 2)

```
ICC:DEST(XXXX):____
¦¦¦¦¦¦¦¦¦¦¦¦¦¦¦¦¦¦¦¦¦¦¦¦¦¦
```

Initiate Chained Cart Move (Screen 3)

Description:

This conversation will move a chain of carts that has a control number associated with it. Screen 1 will prompt the operator for the Cart IDs of the carts in the chain. If any of the entered information is invalid, an error message ID will be displayed in the shaded area of screen 1. Screen 2 will be displayed after the operator has successfully entered all of the carts in the chain. Valid error messages are:

- ER1 = Invalid Cart ID,
- ER2 = Not enough Carts Entered,
- ER3 = Duplicate Cart IDs,
- ER4 = Cart ID Not Found,
- ER5 = Cart is Offline,
- ER6 = Cart Currently on Chain,
- ER7 = Cart Currently in Use, or
- ER8 = Cart NOT at this WKST.

K5114.PN - [ICC] - Initiate Chained Cart Move (continued)

At screen 2, the operator will be prompted for the Control Number of the material on the carts in the chain. If an invalid control number is entered, the error message "Invalid Control Number" will be displayed in the shaded area of screen 2. After the operator has successfully entered the Control Number of the material on the chain, screen 3 will be displayed.

Screen 3 will display the destination assigned for the chain of material the operator wishes to move. The operator may accept the displayed destination by pressing <ENTER>, or they may enter in a new one. If an invalid destination is entered, the error message "Invalid Destination" will be displayed in the shaded area of screen 3. Once the operator has confirmed the default destination, or successfully changed it, the move will be initiated by sending a message (M01) to the Towline Subcontroller via the Traffic Subcontroller (T.DFD). Screen 1 will then be displayed.

This sequence will continue until another Function Key is pressed.

3.2.20.1.2 K512.PN - [CAR] - Towline Cart Management

```
CAR:  F1DMD F2QER F3QEC
      F4UCT F6RCM
```

Towline Cart Management (Screen 1)

```
CAR: NOT AUTHORIZED_
```

Towline Cart Management (Optional Screen 2)

Description:

This display allows the operator to select conversations relating to cart management. If the selected sub-menu is not authorized at the current workstation, the optional screen 2 will be displayed, allowing the operator to enter another Function Key.

3.2.20.1.2.1 **K5121.PN - [DMD] - Determine Material Destination**

```
DMD:CN:____
¦¦¦¦¦¦¦¦¦¦¦¦¦¦¦¦¦¦¦¦¦¦¦¦¦¦
¦¦¦¦¦¦¦¦¦¦¦¦¦¦¦¦¦¦¦¦¦¦¦¦¦¦
```

Determine Material Destination (Screen 1)

```
DMD:DEST(XXXX):____
¦¦¦¦¦¦¦¦¦¦¦¦¦¦¦¦¦¦¦¦¦¦¦¦¦¦
¦¦¦¦¦¦¦¦¦¦¦¦¦¦¦¦¦¦¦¦¦¦¦¦¦¦
```

Determine Material Destination (Screen 2)

Description:

This conversation allows the user to move a load that has entered the EDC through the Intradepot Transporter at shipping or receiving. Screen 1 will prompt the user for the Control Number of the material. If the control number is invalid, the error message "Invalid Control Number" will be displayed in the shaded area of screen 1. Screen 2 will be displayed after the operator has successfully entered the Control Number.

Screen 2 will display the assigned destination for the material. The operator may confirm the destination by pressing <ENTER>, or they may override the destination. If an invalid destination is entered, the error message "Invalid Destination" is displayed in the shaded area of screen 2. After the operator has confirmed the default destination or successfully changed it, the move will be initiated by sending a message (M01) to the Towline Subcontroller (L.DFD) via the Traffic Subcontroller (T.DFD). Then screen 1 will be displayed.

This sequence will continue until another Function Key is pressed.

3.2.20.1.2.2 **K5122.PN - [QER] - Queue Empty Request**

```
QER:CART TYPE:__
¦¦¦¦¦¦¦¦¦¦¦¦¦¦¦¦¦¦¦¦¦¦¦¦¦¦¦¦¦¦
```

Queue Empty Request (Screen 1)

Description:

This conversation will prompt the user for the type of empty cart to be delivered to the operator's workstation. If invalid information is entered, an error message will be displayed in the shaded area of the screen. Valid error messages are:

- Invalid Cart Type,
- Workstation Not Found,
- Invalid Cart Request,
- Invalid for this WKST,
- Cart Already Requested,
- Workstation Offline,
- Workstation Inactive,
- Conversation NOT Allowed At This Workstation, or
- Functional Area NOT in Empty Cart Management Tables.

After the operator has successfully entered a cart type, the request will be initiated by sending a message (T01) to the Towline Subcontroller (L.DFD) via the Traffic Subcontroller (T.DFD).
Then this screen will be redisplayed. This sequence will continue until another Function Key is pressed.

3.2.20.1.2.3 **K5123.PN - [QEC] - Queue Empty Cart**

```
QEC:CART:____, TYPE:__
```

Queue Empty Cart (Screen 1)

Description:

This conversation will inform the Empty Cart Management process that the cart is now empty and available for use. The user will be prompted for the Cart ID and for the Type. If invalid information is entered, an error message will be displayed in the shaded area of the screen. Valid error messages are:

- Invalid Cart ID,
- Cart ID Not Found,
- Cart Offline,
- Cart Currently on Chain,
- Cart Currently in Use,
- Cart Not at this WKST,
- Invalid Cart Type,
- Cart Already Queued, or
- System Error.

After the operator has successfully entered a Cart ID and Cart Type, the request will be initiated by sending a message (T03) to the Towline Subcontroller via the Traffic Subcontroller (T.DFD). Then this screen will be redisplayed. This sequence will continue until another Function Key is pressed.

3.2.20.1.2.4 **K5124.PN - [UCT] - Update Cart Type**

```
UCT:CART:____, TYPE:__
¦¦¦¦¦¦¦¦¦¦¦¦¦¦¦¦¦¦¦¦¦¦¦¦
```

Update Cart Type (Screen 1)

Description:

This conversation allows the operator to change the cart type. This screen will prompt the user for the Cart ID and the new Cart Type. If invalid information is entered, an error message will be displayed in the shaded area of the screen. Valid error messages are:

- Invalid Cart ID,
- Must Enter Cart Type,
- Cart ID Not Found,
- Cart is Offline,
- Cart NOT at this WKST, or
- Not Available for Change.

After the operator has successfully entered the Cart Type and Cart ID, the change will be updated in the database, and this screen will be redisplayed. This sequence will continue until another Function Key is pressed.

3.2.20.1.2.5 **K5125.PN - [RCM] - Recreate Cart Move**

```
RCM:CART:____
¦¦¦¦¦¦¦¦¦¦¦¦¦¦¦¦¦¦¦¦¦¦¦¦¦¦
```

Recreate Cart Move (Screen 1)

```
LS going to Snnn XXXXX
(CXXX) Data OK (Y/N)?_
```

Recreate Cart Move (Screen 2)

```
WARNING - cart currently
On chain CONTINUE(Y/N)?_
```

Recreate Cart Move (Screen 3)

```
RCM:CART TYPE(XX):__
¦¦¦¦¦¦¦¦¦¦¦¦¦¦¦¦¦¦¦¦¦¦¦¦¦¦
```

Recreate Cart Move (Screen 4)

```
RCM:CN(XXXXX):_____
¦¦¦¦¦¦¦¦¦¦¦¦¦¦¦¦¦¦¦¦¦¦¦¦¦¦
```

Recreate Cart Move (Screen 5)

```
RCM:DEST(XXXX):____
! ! ! ! ! ! ! ! ! ! ! ! ! ! ! ! ! ! ! ! ! ! ! ! !
! ! ! ! ! ! ! ! ! ! ! ! ! ! ! ! ! ! ! ! ! ! ! ! !
```

Recreate Cart Move (Screen 6)

```
Put Cart nnnn on Loop n
  THEN press ENTER
```

Recreate Cart Move (Screen 7)

Description:

This conversation allows the operator to recreate a single cart move from any authorized towline workstation keypad using the existing conveyance record Control Number, Chain ID, Final Destination, and routing if applicable. Otherwise, the operator has the capability to change the cart type, queue an empty cart, or create or initiate a single cart move.

The first screen, screen 1, prompts the operator for the Cart ID. If an invalid ID is entered, the error message "Invalid Cart ID" will be displayed in the shaded area of screen 1. After the operator has successfully entered the Cart ID, the next screen will be displayed. If routing information is still available for the cart, screen 2 will be displayed; otherwise, screen 4 is displayed.

Screen 2 is displayed when routing information is available for the Cart ID. This screen will display (if applicable) the Cart Type (LS), Destination Spur (Snnn), Control Number (XXXXX), and Chain ID (CXXX). The operator is prompted for confirmation of routing. Screen 4 is displayed if the operator responds ‘N’ to screen 2. If the operator responds with a ‘Y’ and the cart is on a chain, screen 3 will be displayed. Otherwise screen 7 will be displayed.

Screen 3 will notify the operator that the cart is on a chain. The operator will then be prompted as to whether or not they want to continue. If the operator responds with a ‘Y’, screen 4 will be displayed and the chain will be dissolved; otherwise screen 2 will be displayed.

The next screen (4) is displayed when the cart does not have valid routing information, or when the operator overrides the current routing data. Screen 4 will display the cart type and allow the operator to confirm it by pressing <ENTER>. If an invalid type is entered, the error message "Invalid Cart Type" will be displayed in the shaded area of screen 4. If the cart type is empty, a load of totes, or a load of pallets, screen 7 will be displayed; otherwise screen 5 will be displayed.

K5125.PN - [RCM] - Recreate Cart Move (continued)

Screen 5 is displayed to allow the operator to accept the default load control number or to enter one if there isn't a default or to correct a default. If an incorrect control number is entered, the error message "Invalid Control Number" is displayed in the shaded area of screen 5. Screen 6 is displayed after a correct control number is entered.

Screen 6 prompts the operator for the cart destination. The operator can accept the default destination by pressing <ENTER>, or they may enter a new one. If an invalid cart destination is entered, the error message "Invalid Destination" is displayed in the shaded area of screen 6. Screen 7 is displayed after the operator confirms the displayed default destination or successfully changes it.

The last screen (7) tells the operator which loop to place the cart on and then prompts the operator to press <ENTER>. After the operator physically places the cart on the specified path and presses <ENTER> on the keypad, a message is sent to the Towline Subcontroller (L.DFD) via the Traffic Subcontroller (T.DFD) to initiate the move. Then screen 1 will be displayed.

This sequence will continue until another Function Key is pressed.

3.2.20.1.3 K513.PN - [CKD] - Tote Conveyor Menu

```
CKD:  F1CST F3IST
```

Tote Conveyor Menu (Screen 1)

```
CKD: NOT AUTHORIZED_
```

Tote Conveyor Menu (Optional Screen 2)

Description:

This display allows the operator to select conversations relating to tote movement. If the selected sub-menu is not authorized at the current workstation, the optional screen 2 will be displayed, allowing the operator to enter another Function Key.

3.2.20.1.3.1 **K5131.PN - [CST] - Create Single Tote Move**

```
CST:TOTE:_____
¦¦¦¦¦¦¦¦¦¦¦¦¦¦¦¦¦¦¦¦¦¦¦¦¦¦
¦¦¦¦¦¦¦¦¦¦¦¦¦¦¦¦¦¦¦¦¦¦¦¦¦¦
```

Create Single Tote Move (Screen 1)

```
CST:DEST(XXXX):____
¦¦¦¦¦¦¦¦¦¦¦¦¦¦¦¦¦¦¦¦¦¦¦¦¦¦
¦¦¦¦¦¦¦¦¦¦¦¦¦¦¦¦¦¦¦¦¦¦¦¦¦¦
```

Create Single Tote Move (Screen 2)

Description:

This conversation allows the operator to specify a tote to be moved. This is a tote that does not have a control number associated with it. The first screen prompts the operator for the Tote ID. If this is an invalid Tote ID, or if there is an error associated with the Tote ID, the error message will be displayed in the shaded portion of the screen. After the operator successfully enters a Tote ID, the next screen will be displayed. Valid error messages for screen 1 are:

- Invalid Tote ID,
- Tote ID Not Found,
- Tote Currently on Chain,
- Tote Currently in Use, and
- Tote NOT at this WKST.

The second screen for this conversation will display the default destination. The operator may confirm the displayed destination by pressing <ENTER>, or may enter a new one. If the destination entered is invalid, the error message "Invalid Destination" will be displayed in the shaded portion of screen 2. After the operator has confirmed the default destination or successfully changed it, the move will be initiated by sending a message (M01) to the Tote Conveyor Subcontroller (F.DFD) via the Traffic Subcontroller (T.DFD). Then screen 1 will be displayed. This sequence will continue until a valid Function Key is pressed.

3.2.20.1.3.2 **K5133.PN - [IST] - Initiate Single Tote Move**

```
IST:TOTE:_____,CN:_____
```

Initiate Single Tote Move (Screen 1)

```
IST:DEST(XXXX):____
```

Initiate Single Tote Move (Screen 2)

Description:

This conversation allows a tote with a control number to be moved. Screen 1 will prompt the operator for the Tote ID and for the Control Number of the material. If invalid information is entered, an error message will be displayed in the shaded area of screen 1. Valid error messages are:

- Invalid Tote ID,
- Tote ID Not Found,
- Tote Currently on Chain,
- Tote NOT at this WKST,
- Invalid Control Number, or
- Control Number Not Found.

After the operator successfully enters a Tote ID and Control Number, screen 2 will be displayed

Screen 2 will display the destination assigned to the material the operator requested to be moved. The operator may accept the displayed destination by pressing <ENTER>, or they may enter in a new one. If an invalid destination is entered, the error message "Invalid Destination" will be displayed in the shaded area of screen 2. Once the operator has confirmed the default destination, or successfully changed it, the move will be initiated by sending a message (M01) to the Tote Conveyor Subcontroller (F.DFD) via the Traffic Subcontroller (T.DFD). Screen 1 will then be displayed.

This sequence will continue until another Function Key is pressed.

3.2.20.1.4 K514.PN - [UTL] - Keypad Utilities

```
UTL:  F1KCA F3DDR F4RTE
      F5SCL
```

Keypad Utilities Menu (Screen 1)

```
UTL: NOT AUTHORIZED_
```

Keypad Utilities Menu (Optional Screen 2)

Description:

This display allows the operator to select utility conversations. If the selected sub-menu is not authorized at the current workstation, the optional screen 2 will be displayed, allowing the operator to enter another Function Key.

3.2.20.1.4.1 K5141.PN - [KCA] - Keypad Conversation Authorization

```
KCA: A/D CODE:___
  KEYPAD SCREEN:___
```

Keypad Conversation Authorization (Screen 1)

Description:

This screen allows an operator to change the keypad conversations allowed at a particular keypad pedestal. The operator will be prompted for the authorization password, which is a two-character code preceded by an A (for authorize) or a D (for de-authorize). Then the operator will enter the numerical equivalents for the keypad conversation that they wish to authorize (or de-authorize) at that pedestal. Assuming valid information, when the operator presses ENTER, the screen is refreshed and the changes are applied.

3.2.20.1.4.2 K5142.PN - [DDR] - Display Database Record

```
DDR:RECORD TYPE:____
¦¦¦¦¦¦¦¦¦¦¦¦¦¦¦¦¦¦¦¦¦¦¦¦¦¦¦¦¦¦
```

Display Database Record (Screen 1)

Description:

This conversation allows the user to view database information for a Chain record, a Conveyance record, a Function record, a Move record, or a Workstation record. The operator enters a code to view the appropriate record:

- 1 = Chain,
- 2 = Conveyance,
- 3 = Function,
- 4 = Move, or
- 5 = Workstation.

The next few pages discuss each of these options.

3.2.20.1.4.2.1 **K5142A.PN - [DDR] - Display Database Record - Chain Record**

```
DDR:CHAIN ID:____
¦¦¦¦¦¦¦¦¦¦¦¦¦¦¦¦¦¦¦¦¦¦¦¦¦¦
```

Display Database Record - Chain (Screen 1)

```
DDR:CHNS CONV1 CONV2 # A
R=X Xnnn  Xnnnnnn  Xnnnnnnn n
```

Display Database Record - Chain (Screen 2)

```
DDR:CHNS CONV3 CONV4 SPR
     Xnnn Xnnnnnn Xnnnnnn nnn
```

Display Database Record - Chain (Screen 3)

Description:

This conversation allows the operator to view the database record for a Chain. Screen 1 prompts the operator for the Chain ID. If the ID is invalid, an error message will be entered in the shaded area of screen 1. Valid error messages are:

- Invalid Entry or
- Chain NOT Found.

After the operator has successfully entered the Chain ID, screen 2 will be displayed.

Screens 2 and 3 will display the information from the Chain record. Screen 2 will display the Release Indicator, the Chain ID, Conveyance 1 and 2, the Number in the Chain, and the Number Arrived at the Destination. Screen 3 will display the Chain ID, Conveyances 3 and 4, and the destination. When the operator presses <ENTER> at screen 2, screen 3 will be displayed. After the operator presses <ENTER> at screen 3, the original DDR screen 1 (page 22) will be displayed.

This sequence will continue until another Function Key is pressed.

3.2.20.1.4.2.2 **K5142B.PN - [DDR] - Display Database Record - Conveyance Record**

```
DDR:CONV ID:_____
¦¦¦¦¦¦¦¦¦¦¦¦¦¦¦¦¦¦¦¦¦¦¦¦
```

Display Database Record - Conveyance
(Screen 1)

```
DDR:CONV CHNS CTRL# TY S
nc   Xnnnnnn  Cnnn XXXXXXX  XX X
```

Display Database Record - Conveyance
(Screen 2)

```
DDR: CONV AREA PRES FINL
nND Xnnnnnn  XXXX XXXX XXXX
```

Display Database Record - Conveyance
(Screen 3)

```
DDR: CONV NXT1 NXT2 NXT3
nND Xnnnnnn  XXXX XXXX XXXX
```

Display Database Record - Conveyance
(Screen 4)

Description:

This conversation allows the operator to view the Conveyance database record. Screen 1 prompts the operator for the Conveyance ID. If the ID is invalid, an error message will be entered in the shaded area of screen 1. Valid error messages are:

- Invalid Entry,
- Cart ID Not Found, or
- Tote ID Not Found.

K5142B.PN - [DDR] - Display Database Record - Conveyance Record (continued)

After the operator has successfully entered the Conveyance ID, screen 2 will be displayed.

Screen 2, 3, and 4 will display the information from the Chain record. Screen 2 will display the Number on the Chain, Conveyance ID, Chain Number, Control Number, Conveyance Type, and Conveyance Status. When the operator presses <ENTER> at screen 2, screen 3 will be displayed. Screen 3 will display the Number of Next Destinations, Conveyance ID, Area, Present Location, and Final Destination. When the operator presses <ENTER>, if there is more than 1 next destination, screen 4 will be displayed. Screen 4 will display the Number of Next Destinations, Conveyance ID, and Next Destinations, until the Number of Next Destinations is 0. Then the original DDR screen 1 (page 22) will be displayed.

This sequence will continue until another Function Key is pressed.

3.2.20.1.4.2.3 **K5142C.PN - [DDR] - Display Database Record - Function Record**

```
DDR:FUNCTION:____
¦¦¦¦¦¦¦¦¦¦¦¦¦¦¦¦¦¦¦¦¦¦¦¦¦¦
```

Display Database Record - Function (Screen 1)

```
DDR:FUNC T CUR DFLT PLC
  XXXX X nnn XXXX XXX
```

Display Database Record - Function (Screen 2)

Description:

This conversation allows the operator to view the Function database record. Screen 1 prompts the operator for the Function mnemonic. If the mnemonic is invalid, an error message will be entered in the shaded area of screen 1. Valid error messages are:

- Invalid Entry or
- Function Not Found.

After the operator has successfully entered the Function, screen 2 will be displayed.

Screen 2 will display the Function, Function Type, Current Destination, Default Destination, and PLC Number. After the operator presses <ENTER>, the original DDR Screen 1 (page 22) will be displayed.

This sequence will continue until another Function Key is pressed.

3.2.20.1.4.2.4 **K5142D.PN - [DDR] - Display Database Record - Move Record**

```
DDR:CONTROL NR:_
¦¦¦¦¦¦¦¦¦¦¦¦¦¦¦¦¦¦¦¦¦¦¦¦¦¦
```

Display Database Record - Move (Screen 1)

```
DDR:CTRL      CONV    DEST   IDST
    XXXXXXX  Xnnnnnn  XXXX  XXXX
```

Display Database Record - Move (Screen 2)

```
DDR: CTRL      SRC    H  TY S
         XXXXXXX   XXXX X  XX X
```

Display Database Record - Move (Screen 3)

Description:

This conversation allows the operator to view the Move database record. Screen 1 prompts the operator for the Control Number. If the Control Number is invalid, the error message "Invalid Entry" will be entered in the shaded area of screen 1. After the operator has successfully entered the Control Number, screen 2 will be displayed.

Screen 2 will display the Control Number, Conveyance ID, Destination and Intermediate Destination. After the operator presses <ENTER>, screen 3 will be displayed. Screen 3 will display the Control Number, Source Spur ID, Handling Unit, Move Type, and the Transit Status. After the operator presses <ENTER>, the original DDR screen 1 (page 22) will be displayed.

This sequence will continue until another Function Key is pressed.

3.2.20.1.4.2.5 **K5142E.PN - [DDR] - Display Database Record - Workstation Record**

```
DDR:SPUR ID:____
¦¦¦¦¦¦¦¦¦¦¦¦¦¦¦¦¦¦¦¦¦¦¦¦¦¦
```

Display Database Record - Workstation
(Screen 1)

```
DDR:WKST L P CAP IN RT Q
  XXXX X X  nn nn nn X
```

Display Database Record - Workstation
(Screen 2)

```
DDR:WKST AREA CONV  CHNS
  XXXX XXXX XXXXXXX XXXX
```

Display Database Record - Workstation
(Screen 3)

```
DDR:WKST CTRL  DFLT NSPR
  XXXX XXXXXXX XXXX XXXX
```

Display Database Record - Workstation
(Screen 4)

```
DDR:WKST PLC P TY
  XXXX XXX X XX
```

Display Database Record - Workstation
(Screen 5)

K5412E.PN - [DDR] - Display Database Record - Workstation Record (continued)

Description:

This conversation allows the operator to view the Workstation database record. Screen 1 prompts the operator for the Spur ID of the workstation. If the Spur ID is invalid, the error message "Invalid Entry" or "Workstation Not Found" will be entered in the shaded area of screen 1. After the operator has successfully entered the Spur ID, screen 2 will be displayed.

Screen 2 will display the Workstation Spur ID, Logical Status, Physical Status, Spur Capacity, In Count, Enroute Count, and Count Required Flag. After the operator presses <ENTER>, screen 3 will be displayed. Screen 3 will display the Workstation Spur ID, Area, Conveyance ID, and Chain ID. After the operator presses <ENTER>, screen 4 will be displayed. Screen 4 will display the Workstation Spur ID, Control Number, Default Destination, and Next Spur. After the operator presses <ENTER>, screen 5 will be displayed. Screen 5 will display the Workstation Spur ID, the PLC Number, the Priority, and the Workstation Type. After the operator presses <ENTER>, the original DDR screen 1 (page 22) will be displayed.

This sequence will continue until another Function Key is pressed.

3.2.20.1.4.3 **K5143.PN - [RTE] - Display Cart Routing**

```
RTE: FROM SPUR:S___
    TO SPUR:S___
```

Display Cart Routing
(Screen 1)

```
Snnn,snnn,snnn,snnn,snnn
Snnn,snnn,snnn,snnn,snnn
```

Display Cart Routing
(Screen 2)

Description:

This conversation allows the user to display the route of a cart on the towline. The operator is prompted for the Originating and Destination Towline Spurs on screen 1. After the operator has successfully entered the information, screen 2 will be displayed. Screen 2 will display intermediate and final destinations for the movement of the cart from spur 1 to spur 2. After the operator presses <ENTER>, screen 1 will be displayed.

This sequence will continue until another Function Key is pressed.

3.2.20.1.4.4 **K5144.PN - [SCL] - Set Cart Location**

```
SCL:CART:____
¦¦¦¦¦¦¦¦¦¦¦¦¦¦¦¦¦¦¦¦¦¦¦¦¦¦
```

Set Cart Location
(Screen 1)

```
SCL:CONV CHNS CTRL# TY S
NC XXXXXXX Cnnn XXXXXXX XX X
```

Set Cart Location
(Screen 2)

```
SCL: CONV AREA PRES FINL
NND Xnnnnnn  XXXX XXXX XXXX
```

Set Cart Location
(Screen 3)

```
SCL: CONV NXT1 NXT2 NXT3
NND Xnnnnnn   XXXX XXXX XXXX
```

Set Cart Location
(Screen 4)

```
SCL:Cart XXXX to be set
At location SXXX (Y/N)?_
```

Set Cart Location
(Screen 5)

K5144.PN - [SCL] - Set Cart Location (continued)

Description:

This process allows the operator to logically place a cart at the current workstation. Screen 1 will prompt the operator for the Cart ID. If an invalid ID is entered, an error message will be displayed in the shaded area of screen 1. Valid error messages are:

- Invalid Entry,
- Cart ID Not Found,
- nnnn is on another loop, can't set its location, or
- CSL:Cart XXXX on chain can't set its location.

After the operator has successfully entered a Cart ID, the conveyance record is displayed, starting with screen 2. Screen 2 will display the Number on the Chain, Conveyance ID, Control Number, Conveyance Type, and Conveyance Status. After the operator presses <ENTER>, screen 3 will be displayed. Screen 3 will display the Number of Next Destinations, Conveyance ID, Area, Present Location, and Final Destination. After the operator presses <ENTER>, if there is more than 1 next destination, screen 4 will be displayed; otherwise screen 5 will be displayed. Screen 4 displays the Number of Next Destinations, Conveyance ID, and Next Destinations 1 through 3.

Screen 5 will prompt the operator for confirmation that the displayed Cart ID be set at the displayed spur location. Only if the operator responds with 'Y' is the Conveyance Record updated. When the operator presses <ENTER>, screen 1 will be displayed.

This sequence will continue until another Function Key is pressed.

3.2.21 **J.DFD**

Process ID #	Date
J.DFD	April 21, 1999

Requirement ID #(s)

SECS-RC1.2, SECS-RC1.3, SECS-RC2.1, SECS-RC2.2, SECS-RC2.4, SECS-RC2.5, SECS-RC2.6, SECS-RC2.8, SECS-RC2.10, SECS-RC3.1, SECS-RC4.2, SECS-RC4.3, SECS-RC1.1.17

Data Flow Diagram

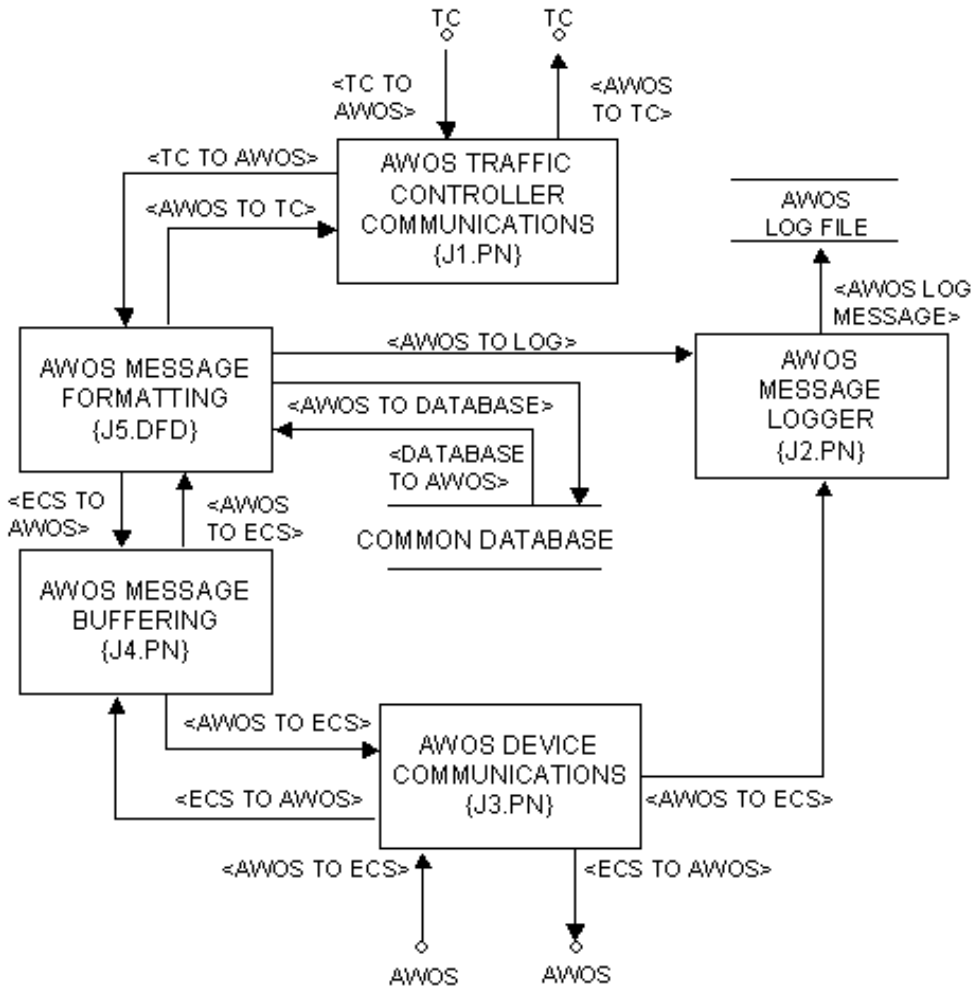

3.2.21.1 J1.PN - AWOS Traffic Controller Communications

Process Name	Process ID #	Date
AWOS Traffic Controller Communications	J1.PN	April 21, 1999

Requirement ID #(s)
SECS-RC1.2, SECS-RC1.3, SECS-RC1.1.17

Process Narrative

This process receives messages from the Traffic Controller (T.DFD) and passes them onto the AWOS Message Formatting (J5.DFD) process. This process receives response and status messages from the AWOS Message Formatting (J5.DFD) process and sends them to the Traffic Controller (T.DFD). This process handles all message transfer protocols and handshaking between the Traffic Controller (T.DFD) and the subcontroller (J.DFD). This process handles the message transmission from memory or hardware.

3.2.21.2 J2.PN - AWOS Message Logger

Process Name	Process ID #	Date
AWOS Message Logger	J2.PN	April 21, 1999

Requirement ID #(s)
SECS-RC4.3, SECS-RC1.1.17

Process Narrative

This process receives messages from the AWOS Message Formatting (J5.DFD) process and the AWOS Device Communications (J3.PN) process and logs messages to the AWOS Log File if logging is enabled.

3.2.21.3 J3.PN - AWOS Device Communications

Process Name	Process ID #	Date
AWOS Device Communications	J3.PN	April 21, 1999

Requirement ID #(s)
SECS-RC1.3, SECS-RC1.1.17

Process Narrative

This process receives messages from the AWOS Message Buffering (J4.PN) process and transmits them to the AWOS Controller (J.DFD). This process receives acknowledgments and status responses from the AWOS Controller (J.DFD) and forwards them to the AWOS Message Buffering (J4.PN) process for further processing. In addition, this process receives messages from control number scanners and scales. This process sends device messages to the AWOS Message Logger (J2.PN) process for logging. This process handles all transfer protocols and handshaking required by the device communications.

3.2.21.4 J4.PN - AWOS Message Buffering

Process Name	Process ID #	Date
AWOS Message Buffering	J4.PN	April 21, 1999

Requirement ID #(s)
SECS-RC4.2, SECS-RC1.1.17

Process Narrative

This process will receive messages from the AWOS Message Formatting (J5.DFD) process and the AWOS Device Communications (J3.PN) process and insert and extract the messages to and from their respective memory buffers.

3.2.21.5 **J5.DFD**

Process ID #	Date
J5.DFD	April 21, 1999

Requirement ID #(s)

SECS-RC1.2, SECS-RC1.3, SECS-RC2.1, SECS-RC2.2, SECS-RC2.4, SECS-RC2.5, SECS-RC2.6, SECS-RC2.8, SECS-RC2.10, SECS-RC3.1, SECS-RC1.1.17

Data Flow Diagram

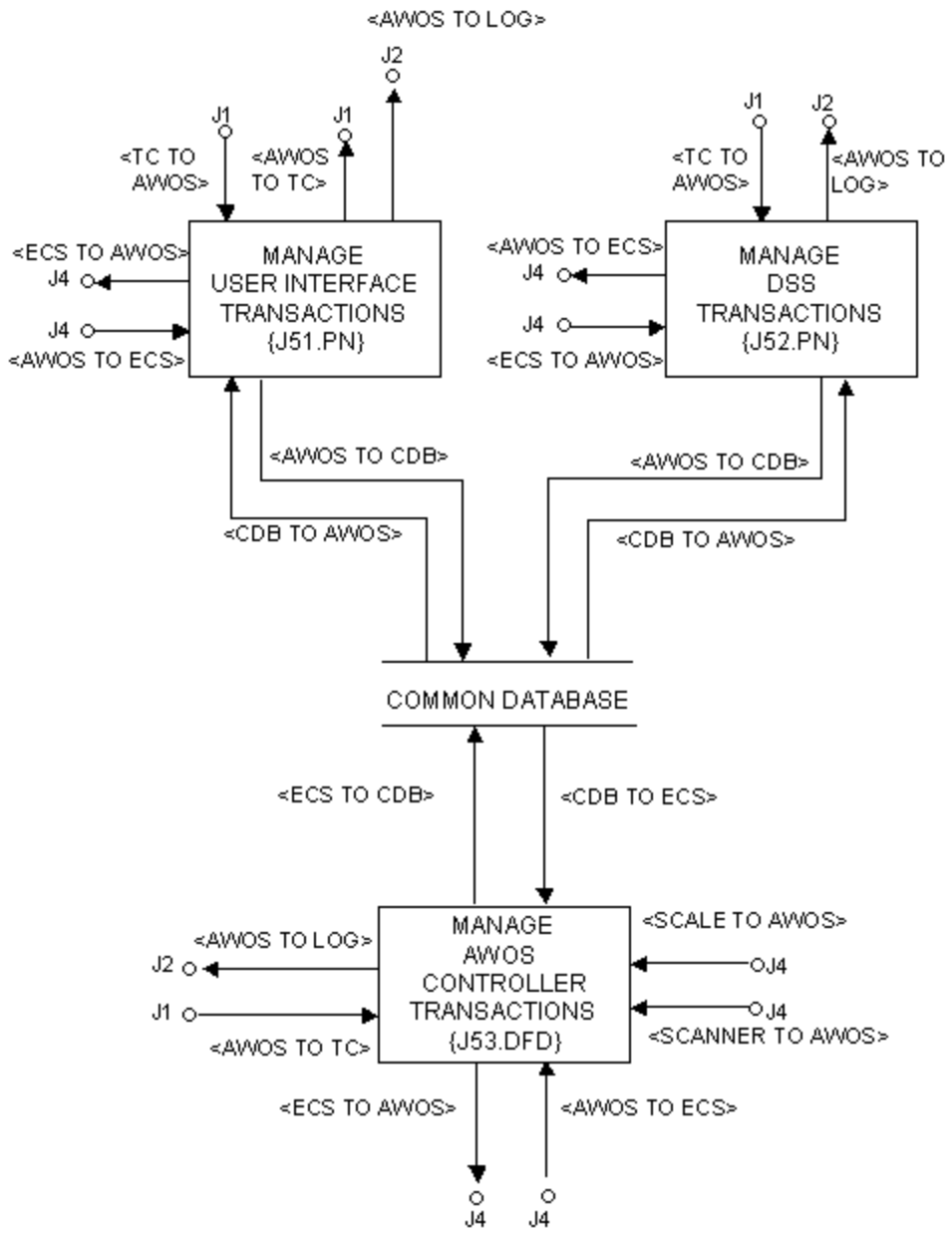

3.2.21.5.1 J51.PN - Manage User Interface Transactions

Process Name	Process ID #	Date
Manage User Interface Transactions	J51.PN	April 21, 1999

Requirement ID #(s)

SECS-RC2.1, SECS-RC2.2, SECS-RC2.4, SECS-RC2.5, SECS-RC2.6, SECS-RC2.8, SECS-RC2.10, SECS-RC3.1, SECS-RC1.1.17

Process Narrative

In this process, messages sent by the User Interface will be processed. The AWOS subcontroller itself or the underlying MHE may be requested to be turned off by a User Interface. In both of these cases the AWOS PLC will be notified of this status change. Also, a User Interface may inform AWOS that a particular real-time status display screen has been entered or exited. This effectively starts or stops a flow of status change messages from AWOS to a User Interface.

3.2.21.5.2 **J52.PN - Manage DSS Transactions**

Process Name	Process ID #	Date
Manage DSS Transactions	J52.PN	April 21, 1999

Requirement ID #(s)
SECS-RC1.2, SECS-RC1.3, SECS-RC3.1, SECS-RC1.1.17

Process Narrative

This process receives SMMs generated by a DSS Small Parcel Costing Process that provides lane destinations for a package. These SMMs may be triggered by a Request For Lane Destination Up Message from AWOS or sent independent of AWOS activity by another DSS transaction. The lane destination (s) is then stored until needed or, at some sites, sent immediately to a PLC. SMMs are also generated by a DSS Parcel Manifesting process to remove records from the AWOS database table. Records removed from the AWOS table are moved to the HIST Database table for storage. The amount of time records would remain in the HIST database Table is configurable by each site.

3.2.21.5.3 **J53.DFD**

Process Name	Process ID #	Date
Manage AWOS Controller Transactions	J53.DFD	April 21, 1999

Requirement ID #(s)

SECS-RC1.2, SECS-RC1.3, SECS-RC3.1, SECS-RC1.1.17

Data Flow Diagram

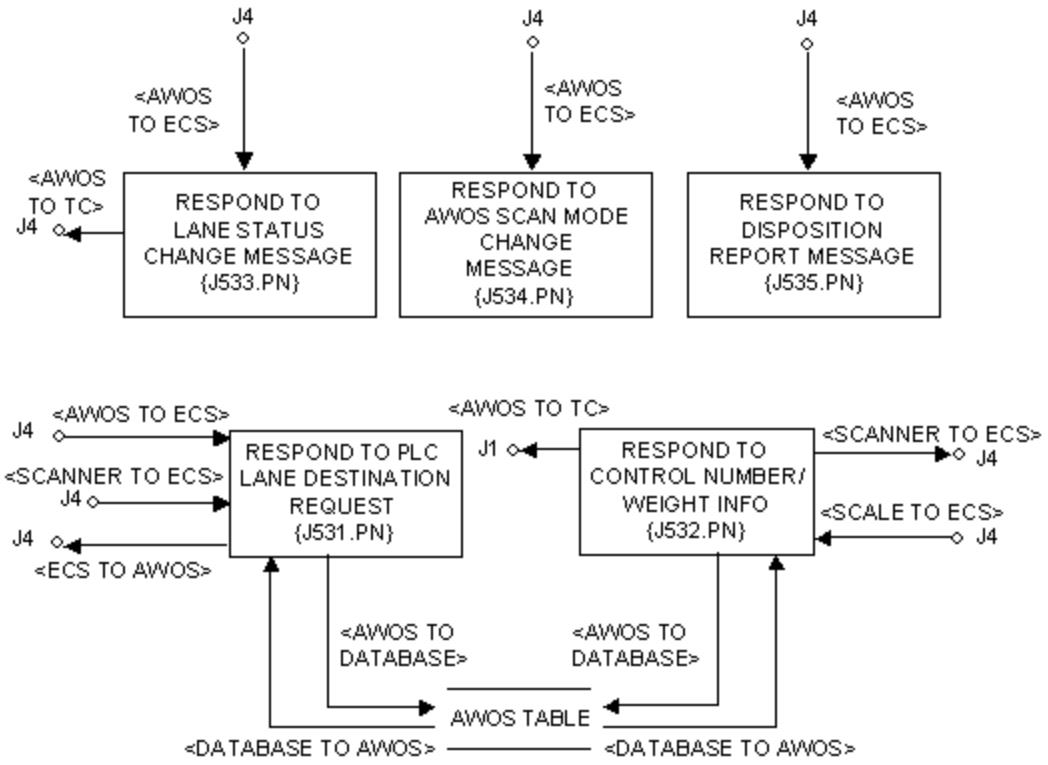

3.2.21.5.3.1 **J531.PN - Respond to PLC Lane Destination Request**

Process Name	Process ID #	Date
Respond to PLC Lane Destination Request	J531.PN	April 21, 1999

Requirement ID #(s)
SECS-RC1.2, SECS-RC1.3, SECS-RC1.1.17

Process Narrative

This process responds to a lane destination request message. This lane message may come from a PLC (AWOS TO ECS) at the Tracy site or an ECS direct-connected scanner (SCANNER TO ECS) at the Mechanicsburg, Norfolk, and New Cumberland sites. In either case, this process sends a reply message to the PLC (ECS TO AWOS) indicating the appropriate lane destination. The appropriate lane destination is found through a lookup in the AWOS database table in the ECS database. If no lane destinations are available for this package or this package itself wasn't found in the database table then a reject or jackpot lane assignment will be provided by this process.

3.2.21.5.3.2 **J532.PN - Respond to Control Number/ Weight Info**

Process Name	Process ID #	Date
Respond to Control Number/ Weight Info	J532.PN	April 21, 1999

Requirement ID #(s)
SECS-RC1.3, SECS-RC3.1, SECS-RC1.1.17

Process Narrative

This process responds to ECS connected devices including scales and scanners by marrying a control number and weight. If a control number and weight are successfully married then a message is sent to DSS that includes the gathered information and requests a set of lane assignments. In the event of scanner or scale reading errors a message is not sent to DSS. This error situation will ultimately cause the Respond to PLC Lane destination Request Process Narrative (J532.PN) to route this package to a reject lane.

3.2.21.5.3.3 J533.PN - Respond To Lane Status Change Message

Process Name	Process ID #	Date
Respond To Lane Status Change Message	J533.PN	April 21, 1999

Requirement ID #(s)
SECS-RC1.3, SECS-RC1.1.17

Process Narrative

This process receives a lane status bitmap and uses this bitmap to update in memory the current statuses of each lane. This information is later used to determine whether or not a package should be routed to the lane assigned to it by DSS or sent to a reject lane. A lane status message is received at only the Mechanicsburg site.

3.2.21.5.3.4 **J534.PN - Respond to AWOS Scan Mode Change**

Process Name	Process ID #	Date
Respond to AWOS Scan Mode Change	J534.PN	April 21, 1999

Requirement ID #(s)
SECS-RC1.1.17

Process Narrative

This process responds to a message changing the source of control number information at a given AWOS station from overhead (automatic) mode to hand-held (manual) mode or vice-versa. Any future scan information received from a scanner that is not active will be ignored. This process is applicable only to the Tracy AWOS site.

3.2.22 **Q.DFD**

Process ID #	Date
Q.DFD	January 5, 2000

Requirement ID #(s)

SECS-RC1, SECS-RC1.1, SECS-RC1.1.5, SECS-RC1.3, SECS-RC1.4, SECS-RC3, SECS-RC3.1, SECS-RC4, SECS-RC4.3, SECS-RC5, SECS-RC10, SECS-RI14

Data Flow Diagram

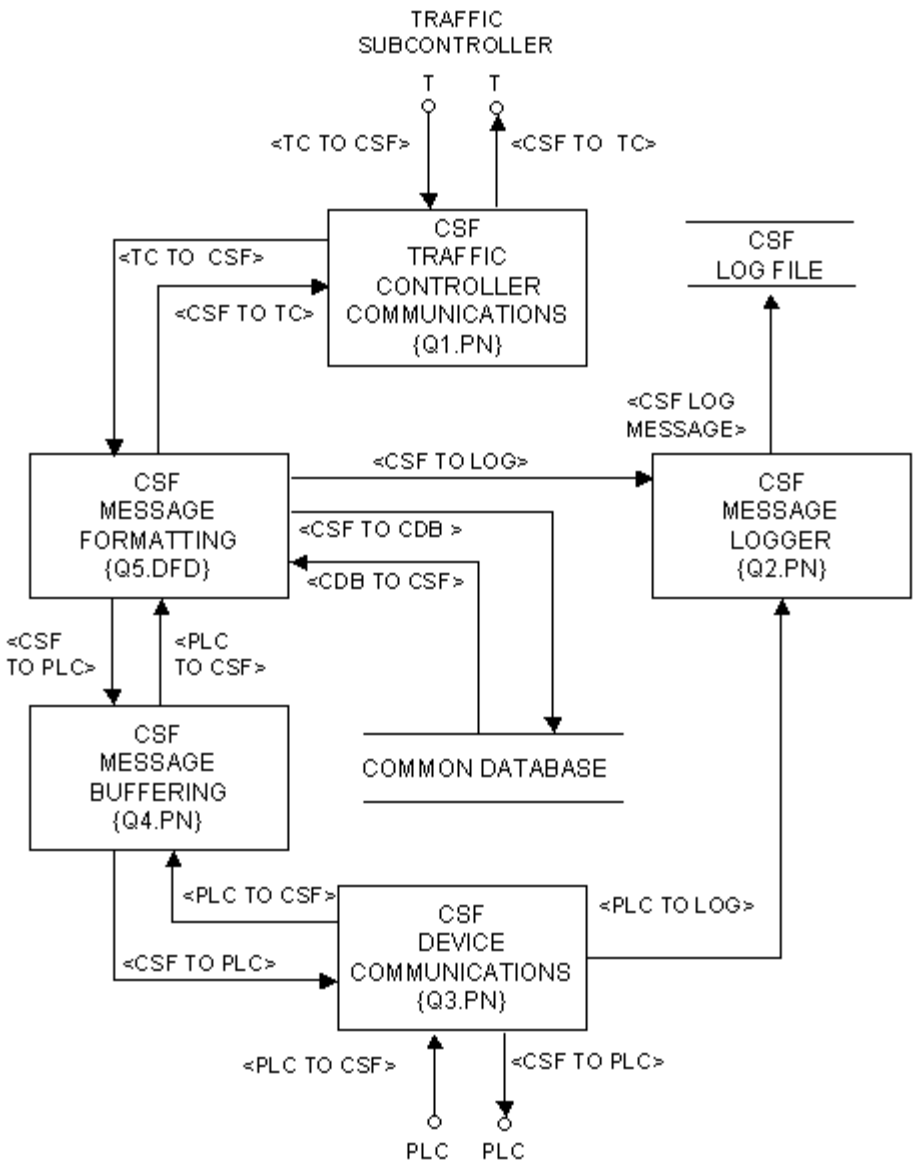

3.2.22.1 Q1.PN - CSF Traffic Controller Communications

Process Name	Process ID #	Date
CSF Traffic Controller Communications	Q1.PN	January 5, 2000

Requirements ID #(s)

SECS-RC1, SECS-RC1.1.5, SECS-RC1.2, SECS-RC1.3, SECS-RC1.4, SECS-RC5, SECS-RI1, SECS-RC3, SECS-RC3.2, SECS-RC3.3

Process Narrative

This process receives messages from the Traffic Controller (T.DFD) and passes them onto the CSF Message Formatting Process. This process receives response and status messages from the CSF Message Formatting Process and sends them to the Traffic Controller (T.DFD). This process handles all message transfer protocols and handshaking between the Traffic Controller (T.DFD) and the CSF Subcontroller (Q.DFD). This process handles message transmission from memory or hardware.

3.2.22.2 Q2.PN - CSF Message Logger

Process Name	Process ID #	Date
CSF Message Logger	Q2.PN	January 5, 2000

Requirements ID #(s)
SECS-RC4, SECS-RC4.3

Process Narrative

This process receives messages from the CSF Message Formatting Process and the CSF Device Communications Process and if logging is enabled logs the message to the CSF Log File.

3.2.22.3 Q3.PN - CSF Device Communications

Process Name	Process ID #	Date
CSF Device Communications	Q3.PN	January 5, 2000

Requirements ID #(s)

SECS-RI8, SECS-RC3, SECS-RC3.1, SECS-RC1, SECS-RC1.1.5, SECS-RC1.2, SECS-RC1.3, SECS-RC1.4, SECS-RC5

Process Narrative

This process receives messages from the CSF Message Buffering Process and transmits them to the CSF Subcontroller. This process receives acknowledgements and status responses from the CSF Subcontroller and forwards them to the CSF Message Buffering Process for further processing. This process sends device messages to the CSF Message Logger Process for logging. This process handles all transfer protocols and handshaking required by the device communications.

3.2.22.4 Q4.PN - CSF Message Buffering

Process Name	Process ID #	Date
CSF Message Buffering	Q4.PN	January 5, 2000

Requirements ID #(s)
SECS-RC3, SECS-RC3.1, SECS-RC4, SECS-RC4.2

Process Narrative

This process will receive messages from the CSF Message Formatting Process and the CSF Device Communications Process and insert and extract the messages to and from their respective memory buffers.

3.2.22.5 **Q5.DFD**

Process ID #	Date
Q5.DFD	January 5, 2000

Requirement ID #(s)

SECS-RC1, SECS-RC1.1, SECS-RC1.1.5, SECS-RC1.3, SECS-RC1.4, SECS-RC3, SECS-RC3.1, SECS-RC4, SECS-RC4.3, SECS-RC5, SECS-RC10, SECS-RI14

Data Flow Diagram

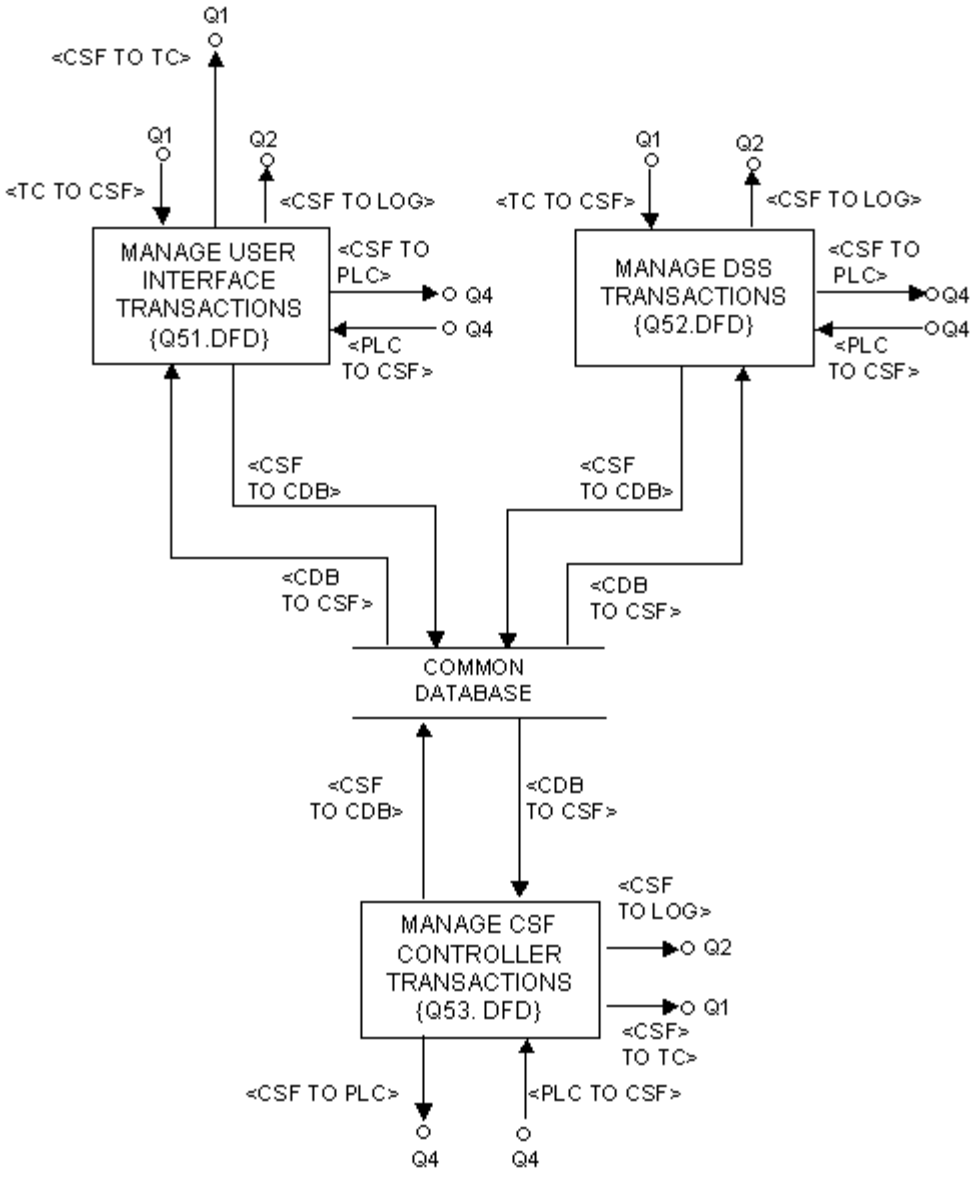

3.2.22.5.1 **Q51.DFD**

Process ID #	Date
Q51.DFD	January 5, 2000

Requirement ID #(s)

SECS-RC1, SECS-RC1.1, SECS-RC1.1.5, SECS-RC1.3, SECS-RC1.4, SECS-RC3, SECS-RC3.1, SECS-RC4, SECS-RC4.3, SECS-RC5, SECS-RC10, SECS-RI14

Data Flow Diagram

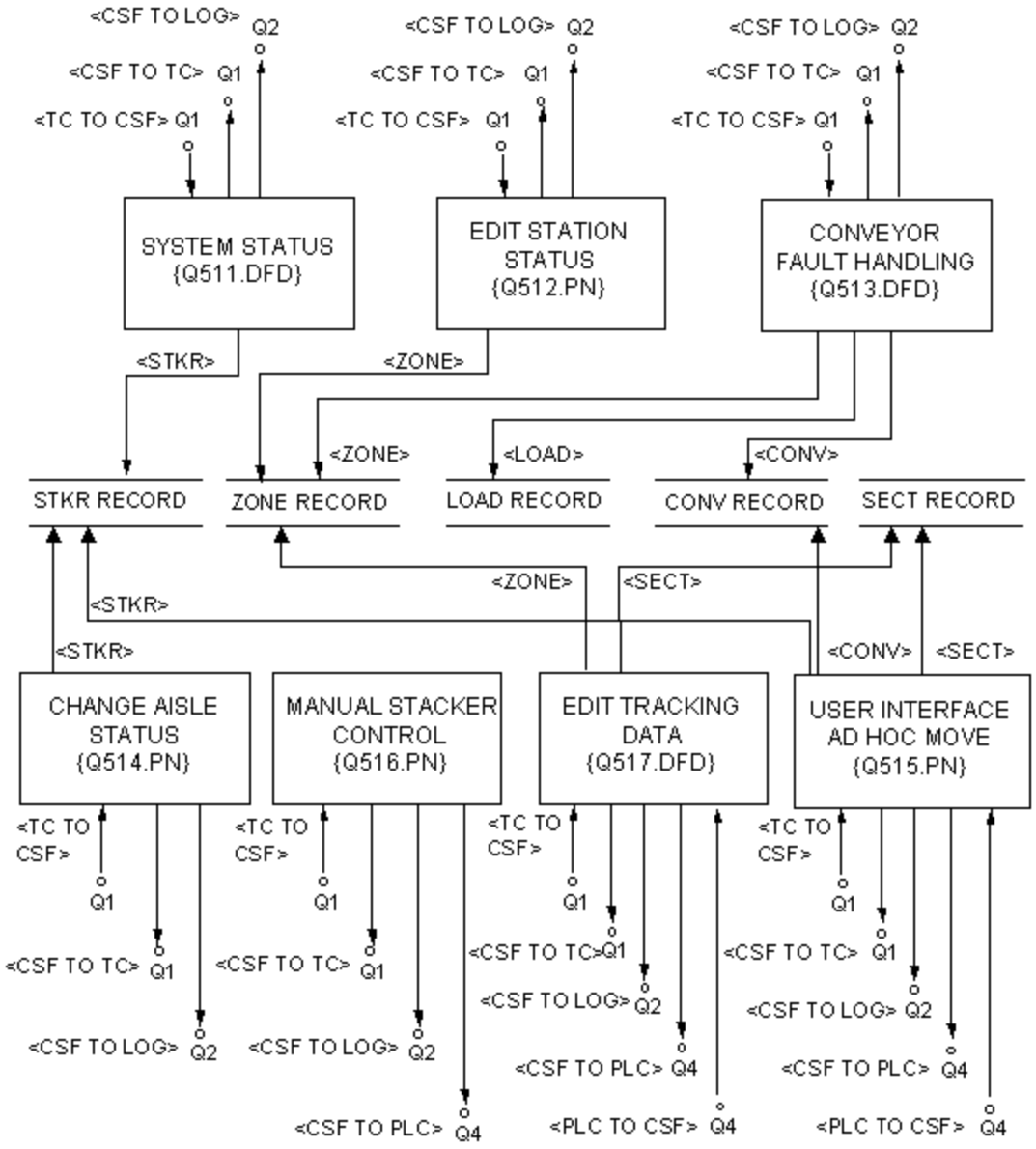

3.2.22.5.1.1 **Q511.DFD**

Process ID #	Date
Q511.DFD	January 5, 2000

Requirement ID #(s)

SECS-RC1, SECS-RC1.1, SECS-RC1.1.5, SECS-RC1.3, SECS-RC1.4, SECS-RC3, SECS-RC3.1, SECS-RC4, SECS-RC4.3, SECS-RC5, SECS-RI14

Data Flow Diagram

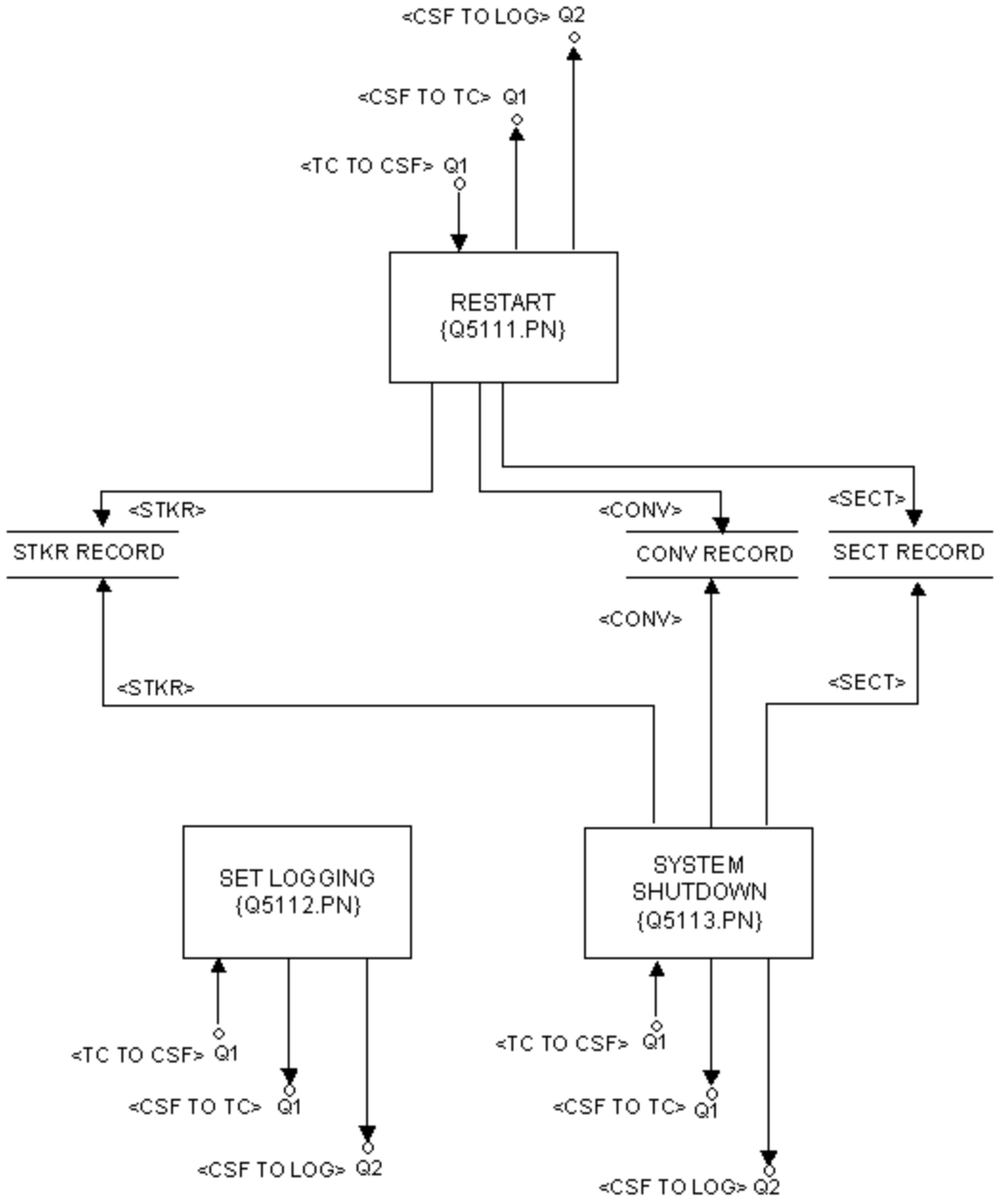

3.2.22.5.1.1.1 **Q5111.PN - Restart**

Process Name	Process ID #	Date
Restart	Q5111.PN	January 5, 2000

Requirements ID #(s)
SECS-RC3, SECS-RC3.1, SECS-RC4, SECS-RC4.3, SECS-RC5

Process Narrative

This process accepts a User Interface request from the CSF Traffic Controller Communications Process (Q1.PN) to set the CSF Subcontroller logically online or offline. The Stacker (STKR), Conveyor (CNVR) and Section (SECT) Records are updated accordingly. If invalid data was received, an error message is formatted and sent to the CSF Traffic Controller Communications Process (Q1.PN). This process sends formatted messages to the CSF Message Logger Process (Q2.PN) for possible logging.

3.2.22.5.1.1.2 **Q5112.PN - Set Logging**

Process Name	Process ID #	Date
Set Logging	Q5112.PN	January 5, 2000

Requirements ID #(s)
SECS-RC3, SECS-RC3.1, SECS-RC4, SECS-RC4.3, SECS-RC5

Process Narrative

This process accepts a User Interface request from the CSF Traffic Controller Communications Process (Q1.PN) to turn the UserLog.Post Process either on or off. Either UserLog.TurnOn or UserLog.TurnOff is called depending on the input parameter. If invalid data was received, an error message is formatted and sent to the CSF Traffic Controller Communications Process (Q1.PN). This process sends formatted messages to the CSF Message Logger Process (Q2.PN) for possible logging.

3.2.22.5.1.1.3 **Q5113.PN - System Shutdown**

Process Name	Process ID #	Date
System Shutdown	Q5113.PN	January 5, 2000

Requirements ID #(s)

SECS-RC3, SECS-RC3.1, SECS-RC4, SECS-RC4.3, SECS-RC5

Process Narrative

This process accepts a User Interface request from the CSF Traffic Controller Communications Process (Q1.PN) to set a flag to shut down the Unit Controller, including the Link objects it uses. The Stacker (STKR), Conveyor (CONV) and Section (SECT) Records are updated accordingly. If invalid data was received, an error message is formatted and sent to the CSF Traffic Controller Communications Process (Q1.PN). This process sends formatted messages to the CSF Message Logger Process (Q2.PN) for possible logging.

3.2.22.5.1.2 **Q512.PN - Edit Station Status**

Process Name	Process ID #	Date
Edit Station Status	Q512.PN	January 5, 2000

Requirements ID #(s)
SECS-RC3, SECS-RC3.1, SECS-RC4, SECS-RC4.3, SECS-RC5, SECS-RC10, SECS-RI14

Process Narrative

This process accepts a V13 Internal Message from the CSF Traffic Controller Communications Process (Q1.PN) and updates the Zone (ZONE) record with DSS Terminal ID associated with a workstation, current load enroute count, current load ID, and station activity. If invalid data was received, an error message is formatted and sent to the CSF Traffic Controller Communications Process (Q1.PN). This process sends formatted messages to the CSF Message Logger Process (Q2.PN) for possible logging.

3.2.22.5.1.3 **Q513.DFD**

Process Name	Process ID #	Date
Conveyor Fault Handling	Q513.DFD	January 5, 2000

Requirements ID #(s)
SECS-RC3, SECS-RC3.1, SECS-RC4, SECS-RC4.3, SECS-RC5, SECS-RC10

Process Narrative

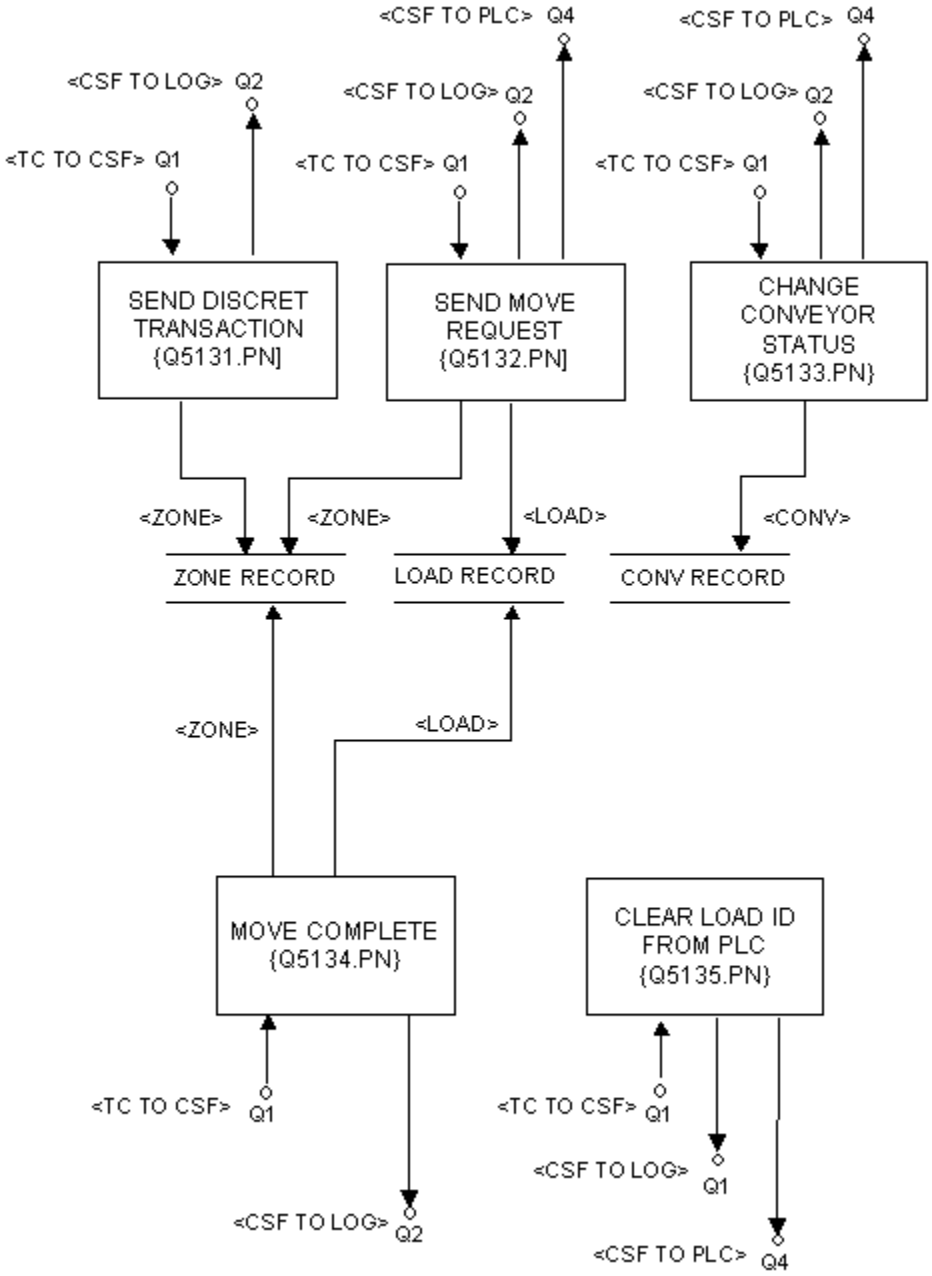

3.2.22.5.1.3.1 **Q5131.PN - Send Discrete Transaction**

Process Name	Process ID #	Date
Send Discrete Transaction	Q5131.PN	January 5, 2000

Requirements ID #(s)

SECS-RC3, SECS-RC3.1, SECS-RC4, SECS-RC4.3, SECS-RC5, SECS-RC10

Process Narrative

This process accepts a Send Discrete Transaction Emulation Message (V05) from the CSF Traffic Controller Communications Process (Q1.PN). If invalid data was received, an error message is formatted and sent to the CSF Traffic Controller Communications Process (Q1.PN). Otherwise, this message is converted into the format expected by Q5313.PN (Discrete Transaction Message) and processed by said process.

3.2.22.5.1.3.2 **Q5132.PN - Send Move Request**

Process Name	Process ID #	Date
Send Move Request	Q5132.PN	January 5, 2000

Requirements ID #(s)
SECS-RC3, SECS-RC3.1, SECS-RC4, SECS-RC4.3, SECS-RC5, SECS-RC10

Process Narrative

This process accepts a Send Move Request Message (V07) from the CSF Traffic Controller Communications Process (Q1.PN). If invalid data was received, an error message is formatted and sent to the CSF Traffic Controller Communications Process (Q1.PN). Otherwise, the from and to workstations are converted into a zone format and, in conjunction with the load ID field of the V07 message, sent to the Conveyor PLC as a tracking move (TM) message. The pertinent Zone (ZONE) and Load (LOAD) records are updated.

3.2.22.5.1.3.3 **Q5133.PN - Change Conveyor Status**

Process Name	Process ID #	Date
CSF Change Conveyor Status	Q5133.PN	January 5, 2000

Requirements ID #(s)
SECS-RC3, SECS-RC3.1, SECS-RC4, SECS-RC4.3, SECS-RC5, SECS-RC10

Process Narrative

This process accepts a V01 Internal Message from the CSF Traffic Controller Communications Process (Q1.PN) updates the Conveyance (CNVR) record and sends a status update message (SU) to the conveyor PLC. If invalid data was received, an error message is formatted and sent to the CSF Traffic Controller Communications Process (Q1.PN). This process sends formatted messages to the CSF Message Logger Process (Q2.PN) for possible logging.

3.2.22.5.1.3.4 **Q5134.PN - Send Move Complete**

Process Name	Process ID #	Date
Send Move Complete	Q5134.PN	January 5, 2000

Requirements ID #(s)

SECS-RC3, SECS-RC3.1, SECS-RC4, SECS-RC4.3, SECS-RC5, SECS-RC10

Process Narrative

This process accepts a Send Move Complete Emulation Message (V09) from the CSF Traffic Controller Communications Process (Q1.PN). If invalid data was received, an error message is formatted and sent to the CSF Traffic Controller Communications Process (Q1.PN). Otherwise, this message is converted into the format expected by Q5311.PN (Tracking Arrival Message) and processed by said process.

3.2.22.5.1.3.5 **Q5135.PN - Clear Load ID from PLC**

Process Name	Process ID #	Date
Clear Load ID From PLC	Q5135.PN	January 5, 2000

Requirements ID #(s)

SECS-RC3, SECS-RC3.1, SECS-RC4, SECS-RC4.3, SECS-RC5, SECS-RC10

Process Narrative

This process accepts a Clear Load ID from PLC Message (V11) from the CSF Traffic Controller Communications Process (Q1.PN). If invalid data was received, an error message is formatted and sent to the CSF Traffic Controller Communications Process (Q1.PN). Otherwise, this message is converted into a special Tracking Move (TM) that is used to erase a particular load ID from the Conveyor PLC's tracking file.

3.2.22.5.1.4 **Q514.PN - CSF Change Aisle Status**

Process Name	Process ID #	Date
CSF Change Aisle Status	Q514.PN	January 5, 2000

Requirements ID #(s)
SECS-RC3, SECS-RC3.1, SECS-RC4, SECS-RC4.3, SECS-RC5, SECS-RC10

Process Narrative

This process accepts a V03 Internal Message from the CSF Traffic Controller Communications Process (Q1.PN), updates the Stacker (STKR) Record. If invalid data was received, an error message is formatted and sent to the CSF Traffic Controller Communications Process (Q1.PN). This process sends formatted messages to the CSF Message Logger Process (Q2.PN) for possible logging.

3.2.22.5.1.5 **Q515.PN - User Interface Ad Hoc Move**

Process ID #	Date
Q515.PN	January 5, 2000

Requirement ID #(s)

SECS-RC1, SECS-RC1.1, SECS-RC1.1.5, SECS-RC1.3, SECS-RC1.4, SECS-RC3, SECS-RC3.1, SECS-RC4, SECS-RC4.3, SECS-RC5, SECS-RC10, SECS-RI14

Process Narrative

This process processes Ad Hoc Moves from the User Interface. If invalid data was received, an error message is formatted and sent to the CSF Traffic Controller Communications Process (Q1.PN). If valid data was received this message is processed as an SMM (Q52.DFD).

3.2.22.5.1.6 **Q516.PN - Manual Stacker Control**

Process Name	Process ID #	Date
Manual Stacker Control	Q516.PN	January 5, 2000

Requirements ID #(s)
SECS-RC3, SECS-RC3.1, SECS-RC4, SECS-RC4.3, SECS-RC5, SECS-RC10

Process Narrative

This process accepts a request from a UI to manually control a stacker. To be manually controlled a stacker must be in exercise mode and idle. An existing stacker transaction can be killed, a stacker can be moved, a pickup can be made, a deposit can be made, or a full cycle pickup and deposit can be made.

3.2.22.5.1.7 **Q517.DFD**

Process Name	Process ID #	Date
Edit Tracking Data	Q517.DFD	January 5, 2000

Requirements ID #(s)

SECS-RC3, SECS-RC3.1, SECS-RC4, SECS-RC4.3, SECS-RC5, SECS-RC10

Process Narrative

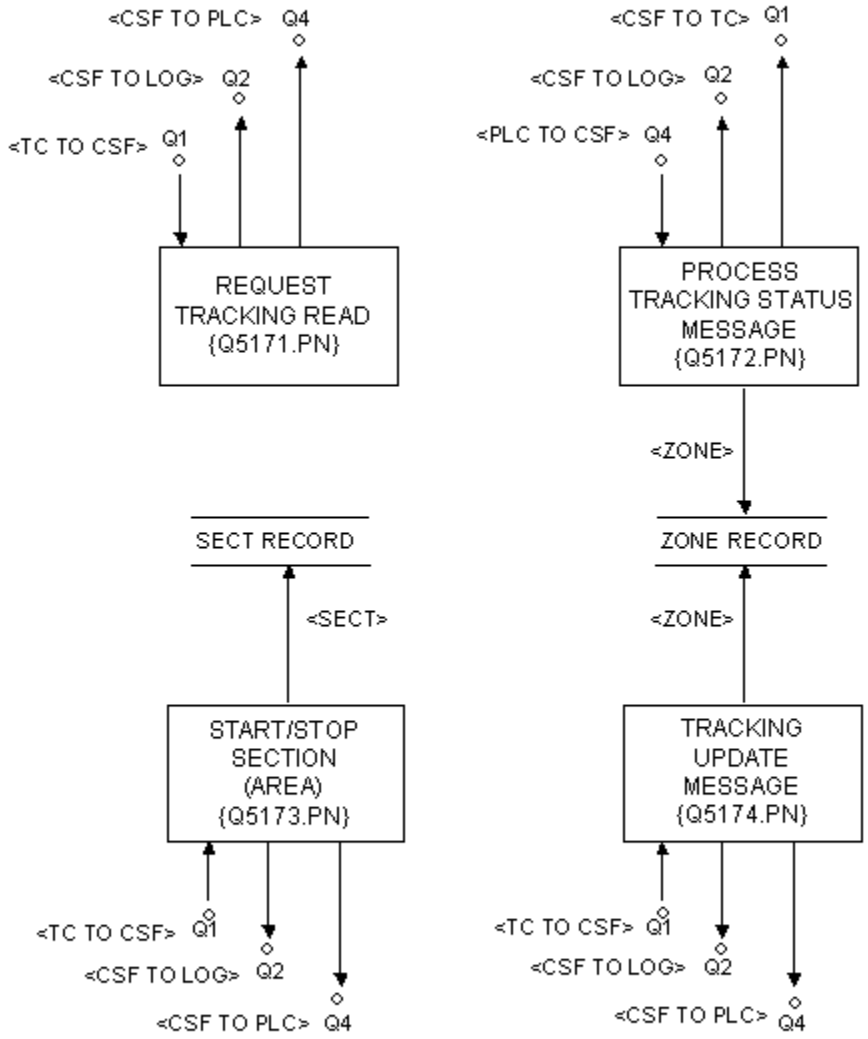

3.2.22.5.1.7.1 **Q5171.PN - Request Tracking Read**

Process Name	Process ID #	Date
Request Tracking Read	Q5171.PN	January 5, 2000

Requirements ID #(s)
SECS-RC3, SECS-RC3.1, SECS-RC4, SECS-RC4.3, SECS-RC5, SECS-RC10

Process Narrative

This process accepts a Request Tracking Read Message (V19) from the CSF Traffic Controller Communications Process (Q1.PN). If invalid data was received, an error message is formatted and sent to the CSF Traffic Controller Communications Process (Q1.PN). Otherwise, a Tracking Read Request Message (TR) for the specified area is sent to the PLC (Q4.PN). The PLC's reply to this request is Process Tracking Status Message (Q5172.PN).

3.2.22.5.1.7.2 **Q5172.PN - Process Tracking Status Message**

Process Name	Process ID #	Date
Process Tracking Status Message	Q5172.PN	January 5, 2000

Requirements ID #(s)
SECS-RC3, SECS-RC3.1, SECS-RC4, SECS-RC4.3, SECS-RC5, SECS-RC10

Process Narrative

This process accepts a Tracking Status (TS) Message from the CSF PLC Communications Process (Q4.PN). If invalid data was received, an error message is formatted and sent to the CSF Traffic Controller Communications Process (Q1.PN). Otherwise, this message is used to update the Zone (ZONE) records for the relevant zones being reported upon in an area. Once all reporting zones in an area have been heard from (which may take 1 TS or multiple TS messages) a Tracking Read Response Message (X20) is issued to the User Interface that requested this information. The CSF Traffic Controller Communications Process (Q1.PN) is the process that directly receives this message.

3.2.22.5.1.7.3 **Q5173.PN - Start/Stop Section (Area)**

Process Name	Process ID #	Date
Start/Stop Section (Area)	Q5173.PN	January 5, 2000

Requirements ID #(s)

SECS-RC3, SECS-RC3.1, SECS-RC4, SECS-RC4.3, SECS-RC5, SECS-RC10

Process Narrative

This process accepts an Enable/Disable Area Message (V21) from the CSF Traffic Controller Communications Process (Q1.PN). If invalid data was received, an error message is formatted and sent to the CSF Traffic Controller Communications Process (Q1.PN). Otherwise, this message is used to update the Section (SECT) Record for the affected area. The Request Tracking Read Process Narrative (Q5171.PN) is triggered to update the tracking data for this area.

3.2.22.5.1.7.4 **Q5174.PN - Tracking Update Message**

Process Name	Process ID #	Date
Tracking Update Message	Q5174.PN	January 5, 2000

Requirements ID #(s)

SECS-RC3, SECS-RC3.1, SECS-RC4, SECS-RC4.3, SECS-RC5, SECS-RC10

Process Narrative

This process accepts a Tracking Update Request Message (V23, V25, V27, or V29) from the CSF Traffic Controller Communications Process (Q1.PN). If invalid data was received, an error message is formatted and sent to the CSF Traffic Controller Communications Process (Q1.PN). Depending on the message type, the appropriate Tracking Update (TU) Message(s) is sent to the Conveyor PLC Communications Process (Q4.PN) and Zone (ZONE) records are updated accordingly. A Delete Load From Zone Message (V23) says that the PLC's tracking data is inaccurate because there is no slave pallet present in a specific zone. The PLC is under the misconception that something should be there. An Add Load to Zone message (V25) is the opposite of a V23 message. It says that there really is a slave pallet in a zone although the PLC's tracking information doesn't report this. A Change Load's Destination message (V27) says that a given slave pallet really is in a given zone but its destination is incorrect. A Move Load message (V29) says that a given load ID is in a different zone within this area than the PLC thinks. In this case, both areas (where the PLC thinks the load is and where the load actually is) need to be updated. Upon successful processing of the Tracking Update Request message a X30 Load Change Response Message is sent to the initiating User Interface.

3.2.22.5.2 **Q52.DFD**

Process ID #	Date
Q52.DFD	January 5, 2000

Requirement ID #(s)

SECS-RC1, SECS-RC1.1, SECS-RC1.1.5, SECS-RC1.3, SECS-RC1.4, SECS-RC3, SECS-RC3.1, SECS-RC4, SECS-RC4.3, SECS-RC5, SECS-RC10, SECS-RI14

Data Flow Diagram

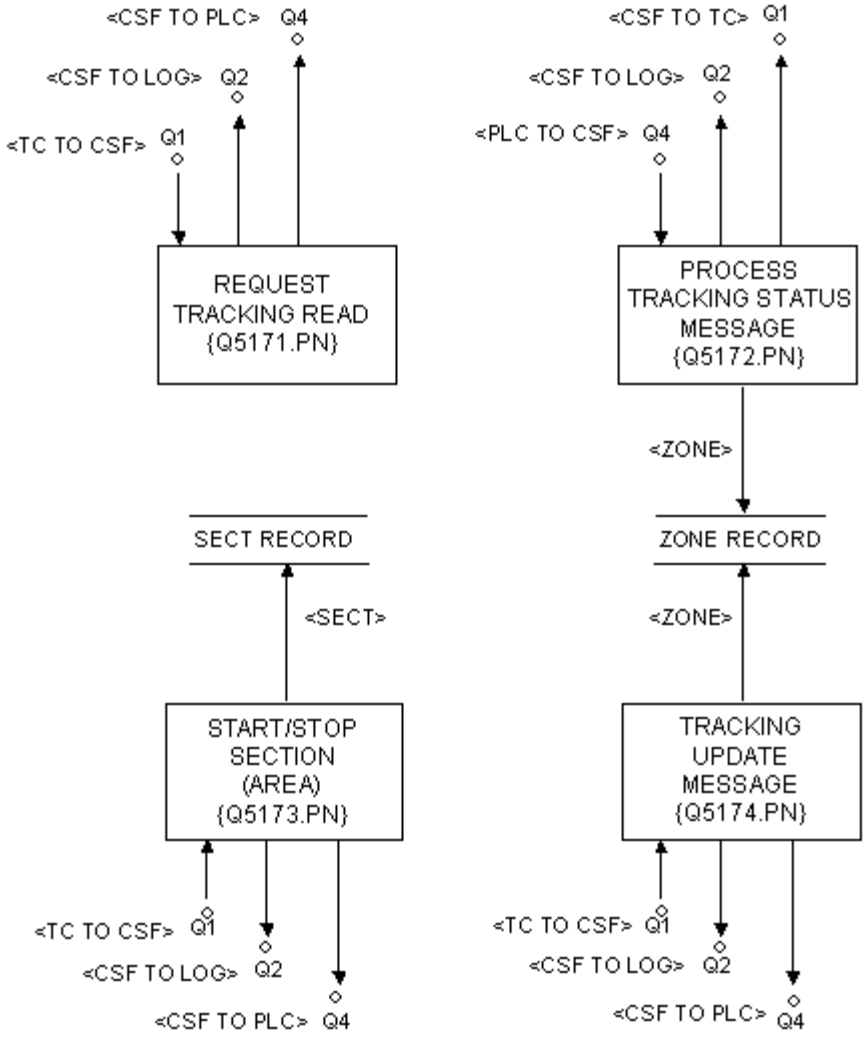

3.2.22.5.2.1 **Q521.PN - DSS Stacker Request**

Process Name	Process ID #	Date
DSS Stacker Request	Q521.PN	January 5, 2000

Requirements ID #(s)

SECS-RC1, SECS-RC1.1, SECS-RC1.1.5, SECS-RC1.3, SECS-RC1.4, SECS-RC3, SECS-RC3.1, SECS-RC4, SECS-RC4.3, SECS-RC5, SECS-RC10, SECS-RI14

Process Narrative

This process accepts a "R" or "E" flag Standard Movement Message (SMM) from the CSF Traffic Controller Communications module (Q1.PN), to move a pallet load from a specified rack storage location and deliver it either to a shipping (SC01-SC04) or partial pick workstation (PK01-PK04) or to another specified rack location. First, a load record (LOAD) with source and destination locations is generated.

If a load ID record already exists which indicates this material is enroute either to or from storage then a deeper analysis must be made. If the material is enroute to storage and the storage location matches the source location then a request will be considered for this load upon its arrival in its storage location. However, if the material is enroute to storage and there is a mismatch in storage locations then the request will be ignored. If the material is enroute from a storage location (i.e. this is a duplicate request) then the request will also be ignored.

Next, the destination area is categorized as by workstation or by functional area (a group of workstations) and the relevant workstation or functional area examined for available space. If no space is available this DSS request is queued until space becomes available in the workstation or functional area and no further processing occurs at this time. However, if space is immediately available an attempt is made to schedule a retrieval from rack storage.

Finally, if the stacker record (STKR) indicates that the stacker is available for immediate use then the appropriate workstation is selected and a pickup (PK) command is sent to the Stacker PLC. A deposit message (DP) completes the movement begun by the PK command and is responsible for depositing a load on the outbound P&D stand. If the stacker isn't available to process this request immediately it is queued as a pending transaction for later processing. If invalid data was received, an error message is formatted and sent to the CSF Traffic Controller Communications Process (Q1.PN). This process sends formatted messages to the CSF Message Logger Process (Q2.PN) for possible logging.

3.2.22.5.2.2 **Q522.PN - DSS Pick/Stow Completion**

Process Name	Process ID #	Date
DSS Pick/Stow Completion	Q522.PN	January 5, 2000

Requirements ID #(s)

SECS-RC1, SECS-RC1.1, SECS-RC1.1.5, SECS-RC1.3, SECS-RC1.4, SECS-RC3, SECS-RC3.1, SECS-RC4, SECS-RC4.3, SECS-RC5, SECS-RC10, SECS-RI14

Process Narrative

This process accepts a "C" flag Standard Movement Message (SMM) from the CSF Traffic Controller Communications Process (Q1.PN), to complete either a retrieval request to either at a shipping or partial pick workstations or a stow request at an induction workstation. If completion is at a shipping workstation (SCnn) the load record is deleted. If completion is at a partial pick workstation (PKnn) the load record (LOAD) is updated and a Tracking Move Message (TM) is sent to the Conveyor PLC and the pallet load is returned to the specified rack storage location. If completion is at an induction workstation (INnn) a new load record (LOAD) is created and a Tracking Move Message (TM) is sent to the Conveyor PLC. If invalid data was received, an error message is formatted and sent to the CSF Traffic Controller Communications Process (Q1.PN). If necessary, the Zone (ZONE) record is updated to reflect the load that is being processed at a workstation. This process sends formatted messages to the CSF Message Logger Process (Q2.PN) for possible logging.

3.2.22.5.2.3 **Q523.PN - DSS Workstation Designation**

Process Name	Process ID #	Date
DSS Workstation Designation	Q523.PN	January 5, 2000

Requirements ID #(s)

SECS-RC1, SECS-RC1.1, SECS-RC1.1.5, SECS-RC1.3, SECS-RC1.4, SECS-RC3, SECS-RC3.1, SECS-RC4, SECS-RC4.3, SECS-RC5, SECS-RC10, SECS-RI14

Process Narrative

This process accepts a Standard Movement Message (SMM) from the CSF Traffic Controller Communications Process (Q1.PN) to assign workstation functions for picks, location surveys, or inventory by updating the Zone (ZONE) Record (specifically, the zone_logged_in flag). If DSS requests are already pending for this worktype then the requests will trigger workload being routed to this workstation, as described in the Stacker Request process narrative (Q521.PN). The worktype of stow and inspection does not send a workstation designation message. Instead, every pallet of these types must given a specific workstation as a destination in each Stacker Request message.

3.2.22.5.2.4 **Q524.PN - DSS Clear Workload**

Process Name	Process ID #	Date
DSS Clear Workload	Q524.PN	January 5, 2000

Requirements ID #(s)

SECS-RC1, SECS-RC1.1, SECS-RC1.1.5, SECS-RC1.3, SECS-RC1.4, SECS-RC3, SECS-RC3.1, SECS-RC4, SECS-RC4.3, SECS-RC5, SECS-RC10, SECS-RI14

Process Narrative

This process accepts a Standard Movement Message (SMM) from the CSF Traffic Controller Communications Process (Q1.PN), to clear the workload for the specified partial pick workstation. If the source field is for a location other than a partial pick location the message will be ignored. This process results in no further workload being assigned to this partial pick workstation.

One category of future workload is retrieval requests that have been placed in a queue for a stacker but not processed yet. If these requests were originally for a functional area they will be returned to the queue of DSS requests for workload. If these requests were originally for this specific workstation then they will be deleted.

Another category of future workload is DSS requests that haven't been passed through to the stacker to be queued or scheduled. If a DSS request exists for the partial pick functional area and other workstations remain logged in then these requests will be kept and processed by other workstations later. If, however, as a result of this logging out no workstations remain logged in then all requests of this functional area will be deleted. If DSS requests exist for this specific partial pick workstation then those requests will be deleted.

The above categories ECS was able to, and did prevent movement assignment. It is also possible for movement to be under way. A stacker may be in the process of placing a load on its outbound P&D stand or a tracking move (TM) taking a load to this workstation may be underway. In either case, a move underway cannot be reversed. This material will eventually find its way to the physical queue in front of a partial pick workstation and will be processed as described in the following paragraph.

The final category is material that is already waiting in the physical queue. Each slave pallet that arrives at a workstation can either be processed by DSS normally (Q522.PN - Pick/Stow Complete) or sent immediately back to rack storage unprocessed as the result of a Bypass Processing conversation. The DSS bypass conversation will take a wanded slave pallet barcode, reidentify the storage location of that slave pallet, and send a Completion SMM to return this pallet to rack storage. Consequently, ECS won't process a bypassed slave pallet any differently than a processed slave pallet.

3.2.22.5.3 **Q53.DFD**

Process ID #	Date
Q53.DFD	January 5, 2000

Requirement ID #(s)

SECS-RC1, SECS-RC1.1, SECS-RC1.1.5, SECS-RC1.3, SECS-RC1.4, SECS-RC3, SECS-RC3.1, SECS-RC4, SECS-RC4.3, SECS-RC5, SECS-RC10, SECS-RI14

Data Flow Diagram

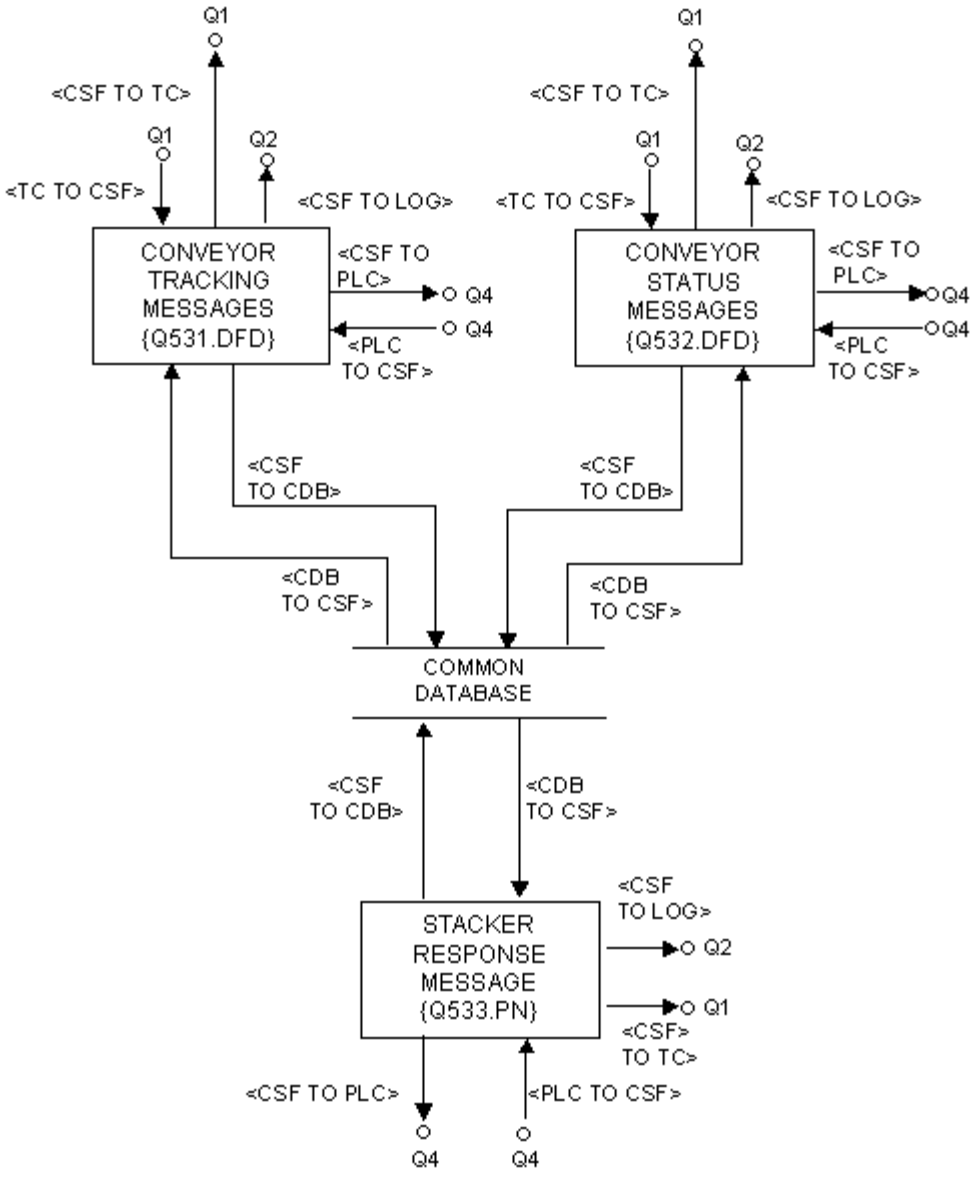

3.2.22.5.3.1 **Q531.DFD**

Process ID #	Date
Q531.DFD	January 5, 2000

Requirement ID #(s)

SECS-RC1, SECS-RC1.1, SECS-RC1.1.5, SECS-RC1.3, SECS-RC1.4, SECS-RC3, SECS-RC3.1, SECS-RC4, SECS-RC4.3, SECS-RC5, SECS-RC10, SECS-RI14

Data Flow Diagram

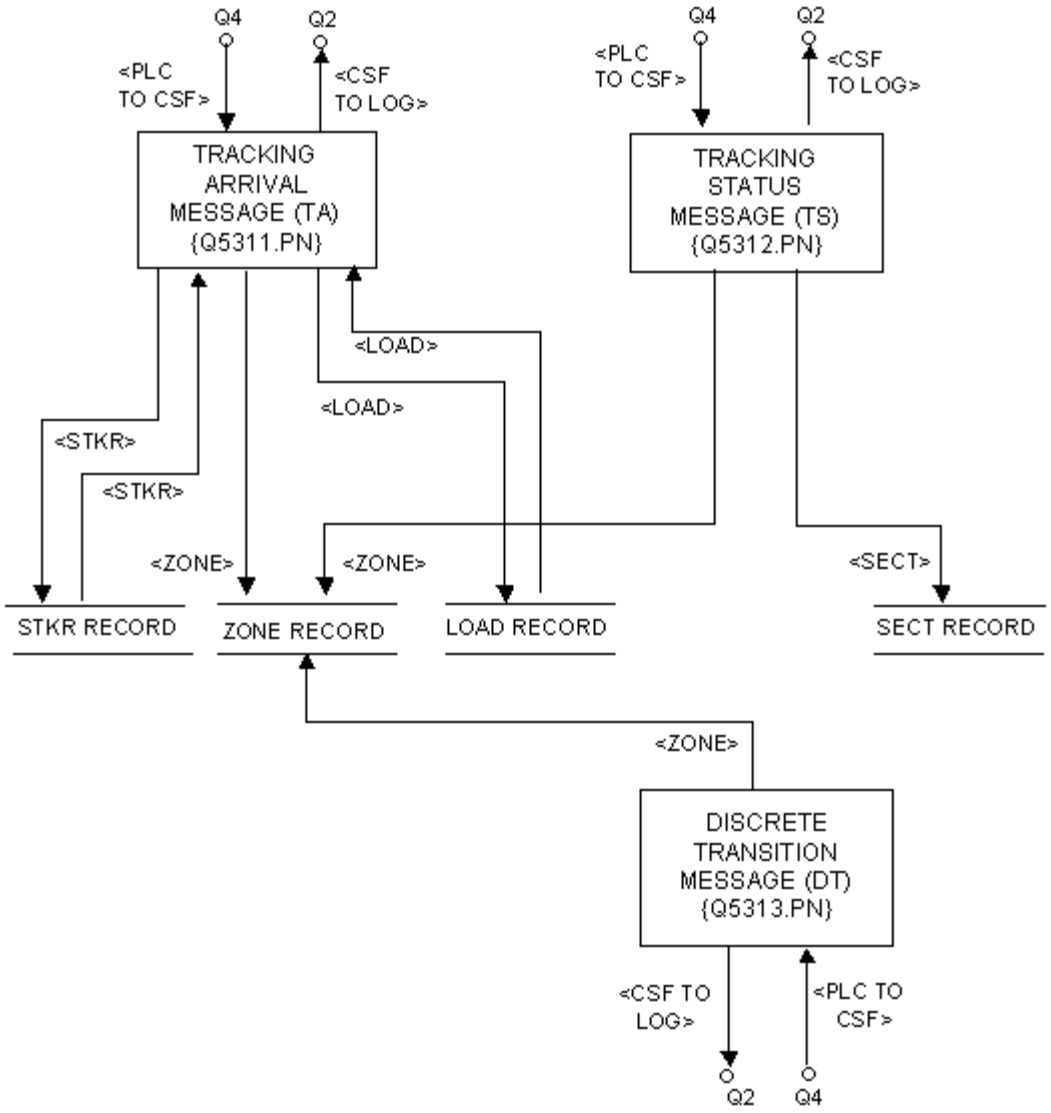

3.2.22.5.3.1.1 **Q5311.PN -Tracking Arrival Message (TA)**

Process Name	Process ID #	Date
Tracking Arrival Message (TA)	Q5311.PN	January 5, 2000

Requirements ID #(s)

SECS-RC1, SECS-RC1.1, SECS-RC1.1.5, SECS-RC1.3, SECS-RC1.4, SECS-RC3, SECS-RC3.1, SECS-RC4, SECS-RC4.3, SECS-RC5, SECS-RC10, SECS-RI14

Process Narrative

This process accepts a Tracking Arrival Message (TA) from the CSF Message Buffering Process (Q4.PN) upon arrival of the load at its intended or final destination. The load (LOAD) and zone (ZONE) records are updated. If the intended and final destination zones differ and the final destination zone is "100" then this is a special indication by the PLC that it is removing a load from its tracking table. If invalid data was received, an error message is formatted and sent to the CSF Traffic Controller Communications Process (Q1.PN). This process sends formatted messages to the CSF Message Logger Process (Q2.PN) for possible logging.

A tracking arrival at an inbound storage location will ultimately trigger a SR/M movement. If the load arrives at its intended stacker input P&D and the stacker is in both store and retrieve (BOTH) mode and the stacker is idle and the stacker is online a command will be sent to the stacker PLC to store the load and the stacker (STKR) and load (LOAD) records are updated. If the load arrives at its intended aisle but the stacker isn't immediately available to store the load (e.g. transaction in progress, exercise mode in effect, stacker has errored (is in a recovery state)) then this arrival is queued for future storage.

If the load arrives at an aisle other than its intended aisle then an attempt will be made to recirculate this material to its correct aisle. The load destination will remain unchanged and the slave pallet will be picked up from its inbound P&D stand and placed on its outbound stand. Once the load arrives at the outbound P&D it will be sent to the inbound P&D of the correct destination stand.

In the event that 2 such recirculation attempts have failed the destination of the slave pallet will be changed to the reject location and then slave pallet will be picked up from the inbound P&D stand and placed on its outbound stand. Once the load arrives at the outbound P&D it will be sent to the inbound P&D of the correct destination stand.

3.2.22.5.3.1.2 **Q5312.PN -Tracking Status Message (TS)**

Process Name	Process ID #	Date
Tracking Status Message (TS)	Q5312.PN	January 5, 2000

Requirements ID #(s)

SECS-RC1, SECS-RC1.1, SECS-RC1.1.5, SECS-RC1.3, SECS-RC1.4, SECS-RC3, SECS-RC3.1, SECS-RC4, SECS-RC4.3, SECS-RC5, SECS-RC10, SECS-RI14

Process Narrative

This process accepts a Tracking Status Message (TS) from the CSF Message Buffering Process (Q4.PN) containing conveyor area status and the load destinations and IDs in the area. The conveyor area (SECT) and zone (ZONE) records are updated. If invalid data was received, an error message is formatted and sent to the CSF Traffic Controller Communications Process (Q1.PN). This process sends formatted messages to the CSF Message Logger Process (Q2.PN) for possible logging.

3.2.22.5.3.1.3 **Q5313.PN -Discrete Transition Message (DT)**

Process Name	Process ID #	Date
Discrete Transition Message (DT)	Q5313.PN	January 5, 2000

Requirements ID #(s)

SECS-RC1, SECS-RC1.1, SECS-RC1.1.5, SECS-RC1.3, SECS-RC1.4, SECS-RC3, SECS-RC3.1, SECS-RC4, SECS-RC4.3, SECS-RC5, SECS-RC10, SECS-RI14

Process Narrative

This process accepts a Discrete Transition (DT) from the CSF Message Buffering Process (Q4.PN) indicating load present (high) or load clear (low). Load Clear messages are the more common variety. They are expected at the Inductions stations (IN01-IN04), partial pick workstations (PK01-PK04), shipping workstations (SC01-SC04), at the Reject workstation (RJ01) and at outbound storage locations (US02-US36, even only). A load departure from a partial pick station will, if the ZONE records indicate that a worker is logged in or a non-pick load (e.g. location survey or inventory) is destined for this workstation, trigger the queuing of a message for a stacker or immediate retrieval (depending on stacker availability). A load departure from an outbound storage location will trigger re-evaluation of that stacker's pending workload queue. If the stacker is available then a new retrieval operation may be begun.

Load Present indication is usually omitted because of the use of Tracking Arrival messages (TA) or Stacker Response Message command done messages (SR) (for outbound storage locations only) to complete transactions. Only at Induction stations (IN01-IN04) are Load Present indications expected. The zone record (ZONE) is updated accordingly. If invalid data was received, an error message is formatted and sent to the CSF Traffic Controller Communications Process (Q1.PN). This process sends formatted messages to the CSF Message Logger Process (Q2.PN) for possible logging.

3.2.22.5.3.2 **Q532.DFD**

Process ID #	Date
Q532.DFD	January 5, 2000

Requirement ID #(s)

SECS-RC1, SECS-RC1.1, SECS-RC1.1.5, SECS-RC1.3, SECS-RC1.4, SECS-RC3, SECS-RC3.1, SECS-RC4, SECS-RC4.3, SECS-RC5, SECS-RC10, SECS-RI14

Data Flow Diagram

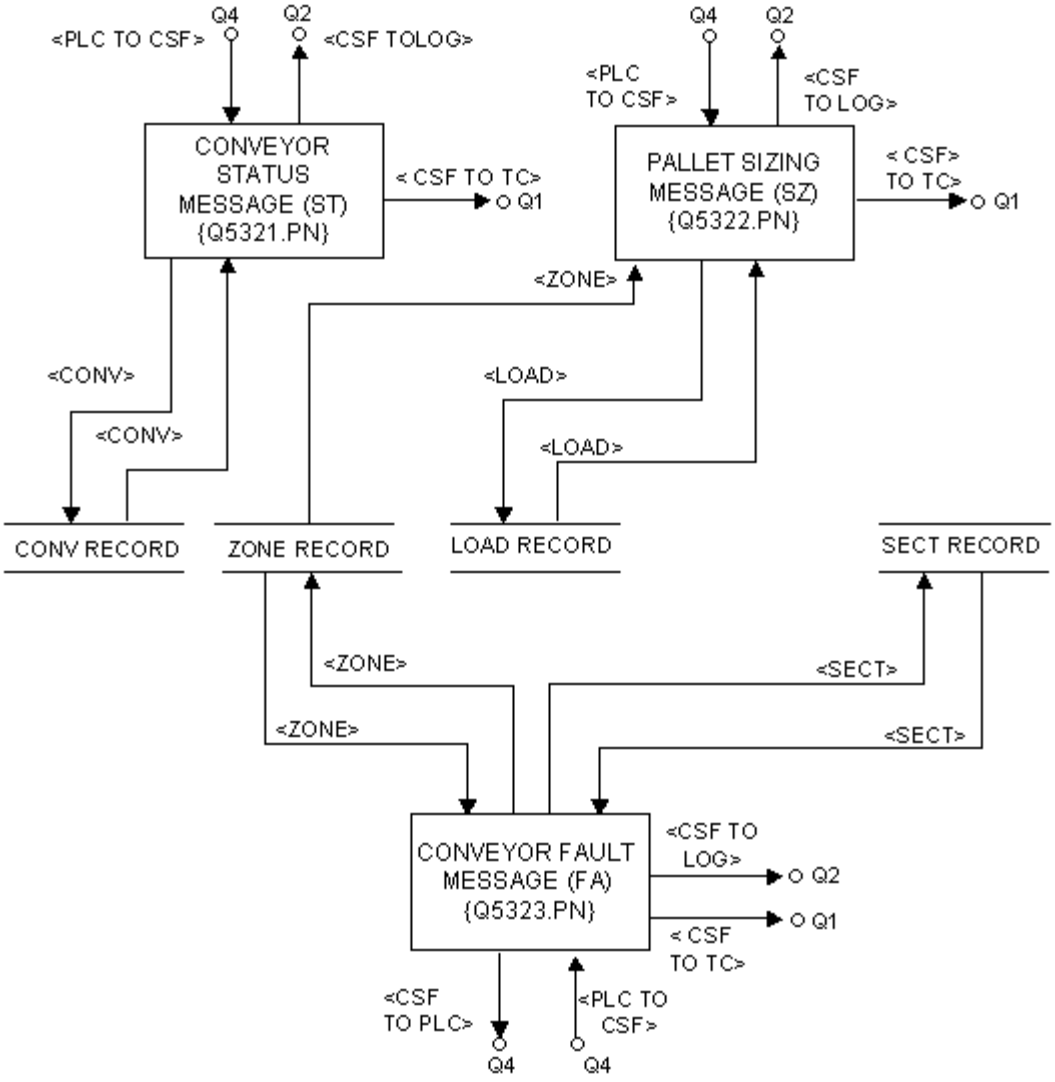

3.2.22.5.3.2.1 **Q5321 - Conveyor Status Message (ST)**

Process Name	Process ID #	Date
Conveyor Status Message (ST)	Q5321.PN	January 5, 2000

Requirements ID #(s)

SECS-RC1, SECS-RC1.1, SECS-RC1.1.5, SECS-RC1.3, SECS-RC1.4, SECS-RC3, SECS-RC3.1, SECS-RC4, SECS-RC4.3, SECS-RC5, SECS-RC10, SECS-RI14

Process Narrative

This process accepts a Conveyor Status Message (ST) from the CSF Message Buffering Process (Q4.PN), and updates the conveyor record (CNVR) status to inhibit (IMT) or allow (AMT) material movement. The aisle status for each aisle is always considered to be online and is therefore ignored. If invalid data was received, an error message is formatted and sent to the CSF Traffic Controller Communications Process (Q1.PN). This process sends formatted messages to the CSF Message Logger Process (Q2.PN) for possible logging.

3.2.22.5.3.2.2 **Q5322.PN - Pallet Sizing Message (SZ)**

Process Name	Process ID #	Date
Pallet Sizing Message (SZ)	Q5322.PN	January 5, 2000

Requirements ID #(s)

SECS-RC1, SECS-RC1.1, SECS-RC1.1.5, SECS-RC1.3, SECS-RC1.4, SECS-RC3, SECS-RC3.1, SECS-RC4, SECS-RC4.3, SECS-RC5, SECS-RC10, SECS-RI14

Process Narrative

This process accepts a Pallet Sizing Message (SZ) from the CSF Message Buffering Process (Q4.PN), updates the load record (LOAD) with the reason for rejection of the pallet. If invalid data was received, an error message is formatted and sent to the CSF Traffic Controller Communications Process (Q1.PN). This process sends formatted messages to the CSF Message Logger Process (Q2.PN) for possible logging.

If no sizing error is reported then this message is really a request for a storage aisle assignment. If a load record exists (LOAD) with rack aisle assignment information then a tracking move (TM) will be sent to the PLC with the destination provided. Otherwise, the pallet will be assigned to the reject workstation (RJ01).

3.2.22.5.3.2.3 **Q5323.PN - Conveyor Fault Message (FA)**

Process Name	Process ID #	Date
Conveyor Fault Message (FA)	Q5323.PN	January 5, 2000

Requirements ID #(s)

SECS-RC1, SECS-RC1.1, SECS-RC1.1.5, SECS-RC1.3, SECS-RC1.4, SECS-RC3, SECS-RC3.1, SECS-RC4, SECS-RC4.3, SECS-RC5, SECS-RC10, SECS-RI14

Process Narrative

This process accepts a Conveyor Fault Message (FA) from the CSF Message Buffering Process (Q4.PN) that can indicate the occurrence of a fault or the successful clearing of a fault. In the case of a fault occurrence this process updates the specified zone record (ZONE) and updates the faulted status of the faulted area (SECT). In the case of a fault clearing, the area of the cleared zone is identified. This area, and all other areas that share the same PLC control cabinet, are considered to be non-faulted. Additionally, the zone record (ZONE) for the originally faulted zone (which typically won't be the same as the zone reported cleared) must be changed to indicate being non-faulted. If invalid data was received, an error message is formatted and sent to the CSF Traffic Controller Communications Process (Q1.PN). This process sends formatted messages to the CSF Message Logger Process (Q2.PN) for possible logging.

3.2.22.5.3.3 **Q533.PN - Stacker Response Message (SR)**

Process Name	Process ID #	Date
Stacker Response Message (SR)	Q533.PN	January 5, 2000

Requirements ID #(s)

SECS-RC1, SECS-RC1.1, SECS-RC1.1.5, SECS-RC1.3, SECS-RC1.4, SECS-RC3, SECS-RC3.1, SECS-RC4, SECS-RC4.3, SECS-RC5, SECS-RC10, SECS-RI14

Process Narrative

This process accepts a Stacker Response Message (SR) from the CSF Message Buffering Process (Q4.PN), updates the stacker record (STKR) accordingly and issues further stacker commands as appropriate. If the response message indicates "Command Done" for a deposit command (DP) on an aisle output P&D, the process issues a tracking Move message (TM) to the conveyor PLC and updates the Zone (ZONE) record. If the response message indicates that a command is in progress (i.e. the SR/M is busy and the Command is not Done) and the stacker record (STKR) indicates that a pickup is in progress then a deposit message is sent to the SR/M. If invalid data was received, an error message is formatted and sent to the CSF Traffic Controller Communications Process (Q1.PN). This process sends formatted messages to the CSF Message Logger Process (Q2.PN) for possible logging.

3.2.23 **R.DFD**

Process ID #	Date
R.DFD Tracy Raymond Carousel Subcontroller	January 25, 2000

Requirement ID #(s)

SECS-RC1, SECS-RC1.1.13, SECS-RC1.2, SECS-RC1.3, SECS-RC1.4, SECS-RC3, SECS-RC3.1, SECS-RC3.2, SECS-RC3.3, SECS-RC4, SECS-RC4.2, SECS-RC4.3, SECS-RI1, SECS-RI5, SECS-RI27

Data Flow Diagram

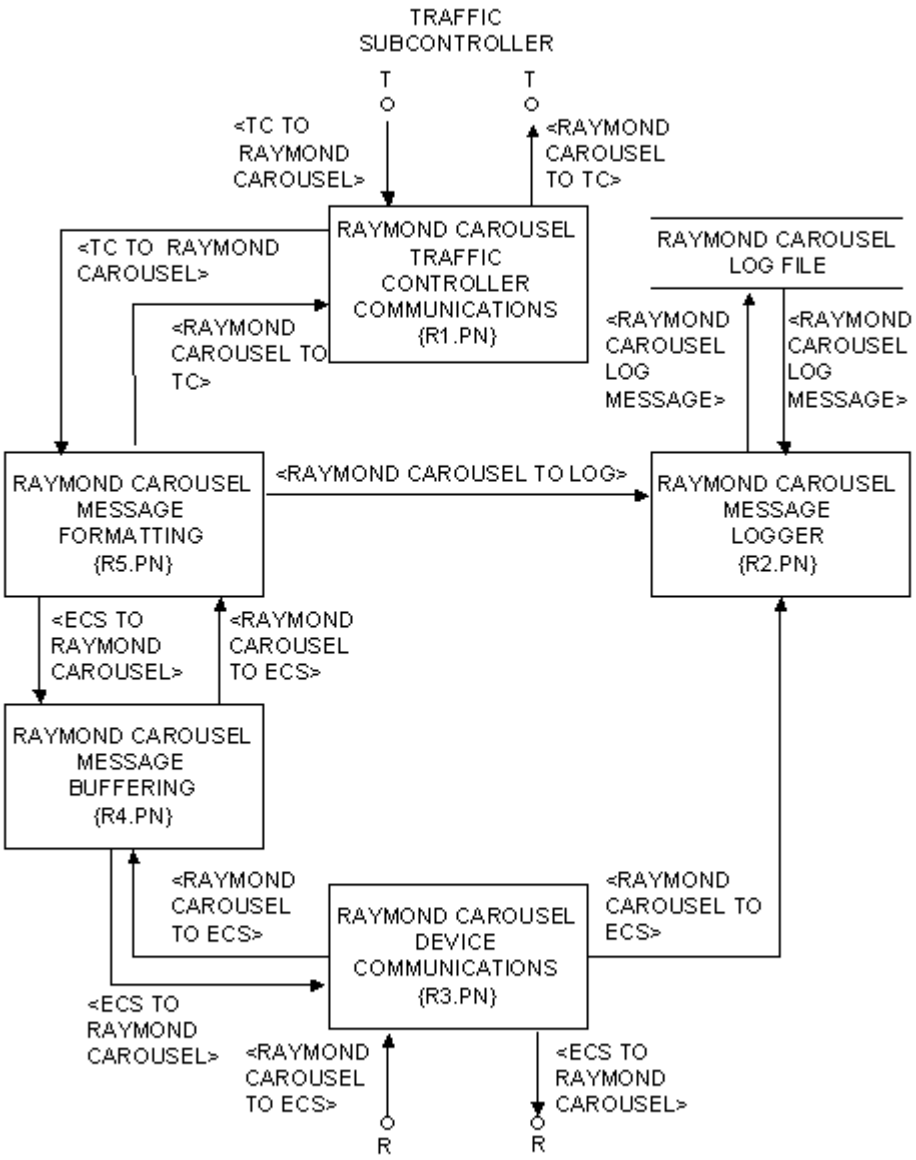

3.2.23.1 R1.PN - Tracy Raymond Carousel Traffic Controller Communications

Process Name	Process ID #	Date
Raymond Carousel Traffic Controller Communications	R1.PN	January 25, 2000

Requirements ID #(s)

SECS-RC1, SECS-RC1.1.13, SECS-RC1.2, SECS-RC1.3, SECS-RC1.4, SECS-RC5, SECS-RI1, SECS-RC3, SECS-RC3.2, SECS-RC3.3, SECS-RI27

Process Narrative

This process receives messages from the Traffic Controller (T.DFD) and passes them onto the Raymond Carousel Message Formatting and Scheduling Process. This process receives response and status messages from the Raymond Carousel Message Formatting and Scheduling Process and sends them to the Traffic Controller (T.DFD). This process handles all message transfer protocols and handshaking between the Traffic Controller (T.DFD) and the subcontroller (R.DFD). This process handles message transmission from memory or hardware.

3.2.23.2 R2.PN - Tracy Raymond Carousel Message Logger

Process Name	Process ID #	Date
Raymond Carousel Message Logger	R2.PN	January 25, 2000

Requirements ID #(s)
SECS-RC4, SECS-RC4.3

Process Narrative

This process receives messages from the Raymond Carousel Message Formatting and Scheduling Process and the Raymond Carousel Device Communications Process and if logging is enabled logs the message to the Raymond Carousel Log File.

3.2.23.3 R3.PN - Carousel Device Communications

Process Name	Process ID #	Date
Raymond Carousel Device Communications	R3.PN	January 25, 2000

Requirements ID #(s)

SECS-RI5, SECS-RC3, SECS-RC3.1, SECS-RC1, SECS-RC1.1.13, SECS-RC1.2, SECS-RC1.3, SECS-RC1.4, SECS-RC5, SECS-RI27

Process Narrative

This process receives messages from the Raymond Carousel Message Buffer Process and transmits them to the Raymond Carousel Controllers. This process receives acknowledgement and status responses from the Raymond Carousel Controllers and forwards them to the Raymond Carousel Message Buffer Process for further processing. This process sends device messages to the Raymond Carousel Message Logger Process for logging. This process handles all transfer protocols and handshaking required by the device communications.

3.2.23.4 R4.PN - Raymond Carousel Message Buffering

Process Name	Process ID #	Date
Raymond Carousel Message Buffering	R4.PN	January 25, 2000

Requirements ID #(s)

SECS-RC3, SECS-RC3.1, SECS-RC4, SECS-RC4.2

Process Narrative

This process will receive messages from the Raymond Carousel Message Formatting and Scheduling Process and the Raymond Carousel Device Communications Process and inserts and extracts the messages into and from their respective memory buffers.

3.2.23.5 R5.PN - Raymond Carousel Message Formatting and Scheduling

Process Name	Process ID #	Date
Raymond Carousel Message Formatting and Scheduling	R5.PN	January 25, 2000

Requirements ID #(s)

SECS-RI5, SECS-RC3, SECS-RC3.1, SECS-RC1, SECS-RC1.1.13, SECS-RC1.2, SECS-RC1.3, SECS-RC1.4, SECS-RC5, SECS-RI27

Process Narrative

This process receives messages from the Raymond Carousel Traffic Controller Communications Process and formats them for transmission to the Raymond Carousel Controllers. This process also handles scheduling of work out of the carousel aisles. Picks, puts, inventory, location surveys and COSIS work will be scheduled to keep a steady flow of work moving toward the storage workstations. This process sends formatted messages to the Raymond Carousel Message Logger Process for logging.

3.2.24 **E.DFD**

Process ID #	Date
E.DFD - Active Item Conveyor Subcontroller	July 9, 2001

Requirement ID #(s)

SECS-RC1.1, SECS-RC1.1.10, SECS-RC1.2, SECS-RC1.3, SECS-RC1.4, SECS-RC2.11, SECS-RC3.1, SECS-RC4.2, SECS-RC4.3, SECS-RC5, SECS-RC1.1.15

Data Flow Diagram

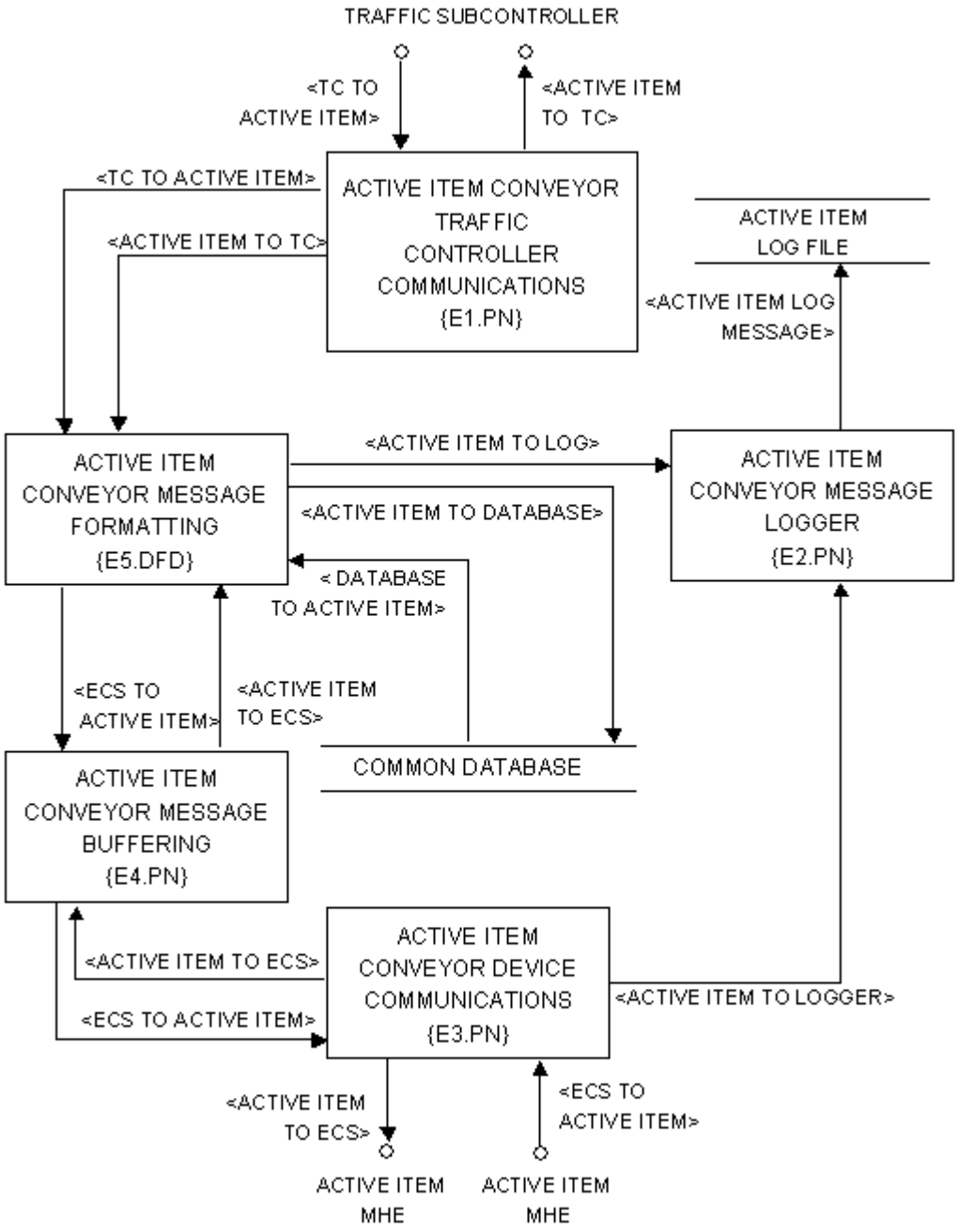

3.2.24.1 E1.PN - Active Item Conveyor Traffic Controller Communications

Process Name	Process ID #	Date
Active Item Conveyor Traffic Controller Communications	E1.PN	July 9, 2001

Requirement ID #(s)

SECS-RC1.1, SECS-RC1.1.10, SECS-RC1.2, SECS-RC1.3, SECS-RC1.4, SECS-RC2.11, SECS-RC3.1, SECS-RC1.1.15

Process Narrative

This process receives messages from the Traffic Controller (T.DFD) and passes them onto the Active Item Conveyor Message Formatting (E5.DFD) process. This process also receives response and status messages from the Active Item Conveyor Message Formatting (E5.DFD) process and sends them to the Traffic Controller (T.DFD). This process handles all message transfer protocols and handshaking between the Traffic Controller (T.DFD) and the subcontroller (E.DFD) as well as the message transmission.

3.2.24.2 E2.PN - Active Item Conveyor Message Logger

Process Name	Process ID #	Date
Active Item Conveyor Message Logger	E2.PN	July 9, 2001

Requirement ID #(s)

SECS-RC1.1, SECS-RC1.1.10, SECS-RC4.2, SECS-RC4.3, SECS-RC1.1.15

Process Narrative

This process receives messages from the Active Item Conveyor Message Formatting (E5.DFD) process and the Active Item Conveyor Device Communications (T3.PN) process. If logging is enabled, this process will log all user messages to a log file. This process also logs all error messages, regardless of whether or not logging is enabled.

3.2.24.3 E3.PN - Active Item Conveyor Device Communications

Process Name	Process ID #	Date
Active Item Conveyor Device Communications	E3.PN	July 9, 2001

Requirement ID #(s)

SECS-RC1.1, SECS-RC1.1.10, SECS-RC1.2, SECS-RC1.3, SECS-RC1.4, SECS-RC5, SECS-RC1.1.15

Process Narrative

This process receives messages from the Active Item Conveyor Message Buffering (E4.PN) process and transmits them to the Active Item Conveyor Controller (E.DFD). This process receives acknowledgments and status responses from the Active Item Conveyor (PLC) and forwards them to the Active Item Conveyor Message Buffering (E4.PN) process for further processing. This process sends device messages to the Active Item Conveyor Message Logger (E2.PN) process for logging. This process handles all transfer protocols and handshaking required by the device communications.

3.2.24.4 E4.PN - Active Item Conveyor Message Buffering

Process Name	Process ID #	Date
Active Item Conveyor Message Buffering	E4.PN	July 9, 2001

Requirement ID #(s)

SECS-RC1.1, SECS-RC1.1.10, SECS-RC4.2, SECS-RC4.3, SECS-RC1.1.15

Process Narrative

This process will receive messages from the Active Item Conveyor Message Formatting (E5.DFD) process and the Active Item Conveyor Device Communications (E3.PN) process and insert and extract the messages to and from their respective memory buffers.

3.2.24.5 **E5.DFD**

Process ID #	Date
E5.DFD - Active Item Conveyor Message Formatting	July 9, 2001

Requirement ID #(s)

SECS-RC1.1, SECS-RC1.1.10, SECS-RC1.2, SECS-RC1.3, SECS-RC1.4, SECS-RC2.3, SECS-RC2.5, SECS-RC2.6, SECS-RC2.11, SECS-RC3.1, SECS-RC4.2, SECS-RC4.3, SECS-RC5, SECS-RC1.1.15

Data Flow Diagram

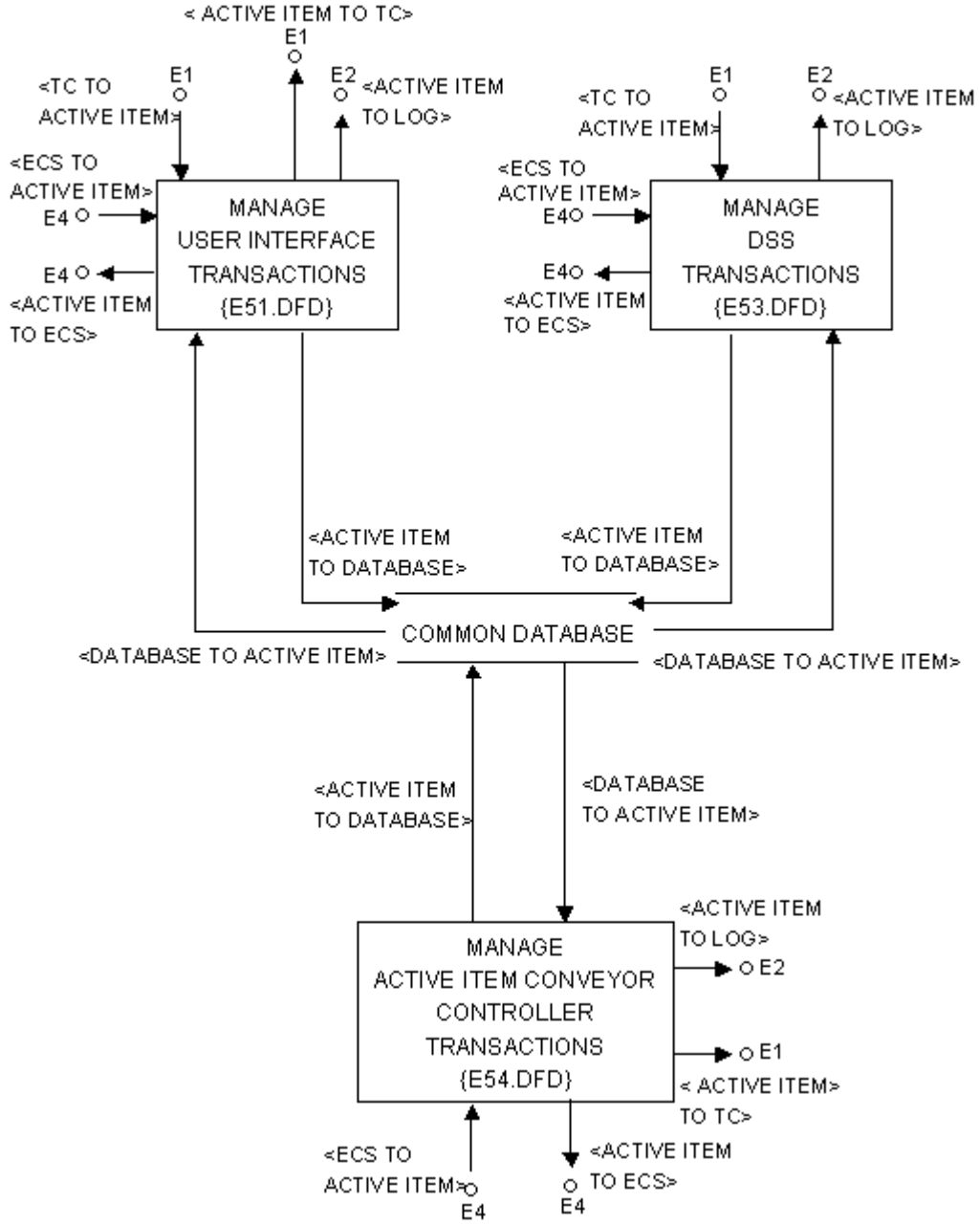

3.2.24.5.1 **E51.DFD**

Process ID #	Date
E51.DFD - Manage User Interface Transactions	July 9, 2001

Requirement ID #(s)

SECS-RC1.1, SECS-RC1.1.10, SECS-RC1.2, SECS-R C1.3, SECS-RC1.4, SECS-RC2.3, SECS-RC2.5, SECS-RC2.6, SECS-RC3.1, SECS-RC4.2, SECS-RC4.3, SECS-RC5, SECS-RC1.1.15

Data Flow Diagram

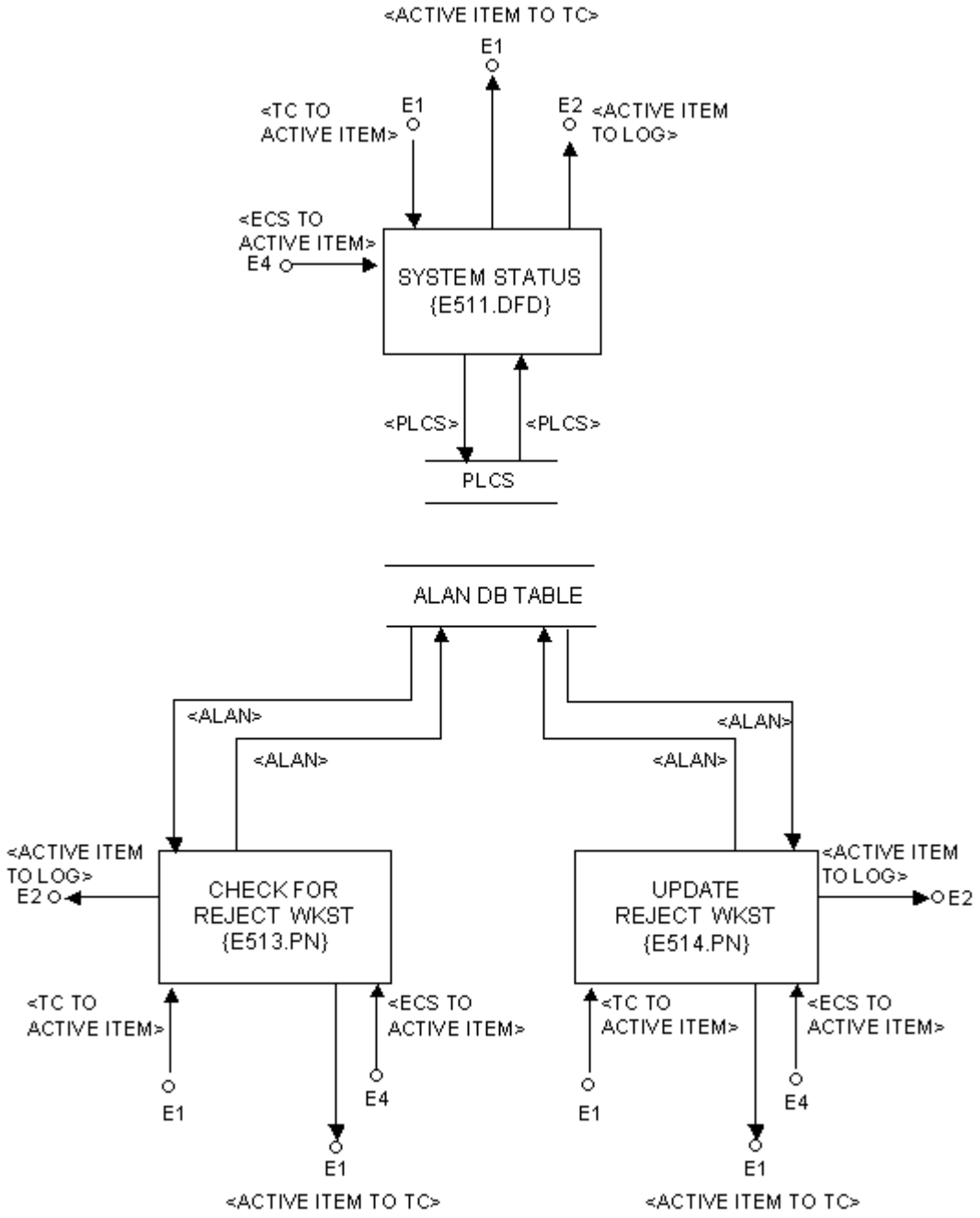

3.2.24.5.1.1 **E511.DFD**

Process ID #	Date
E511.DFD - System Status	July 9, 2001

Requirement ID #(s)

SECS-RC1.1, SECS-RC1.1.10, SECS-RC1.2, SECS-RC1.3, SECS-RC1.4, SECS-RC2.5, SECS-RC2.6, SECS-RC3.1, SECS-RC4.2, SECS-RC4.3, SECS-RC5, SECS-RC1.1.15

Data Flow Diagram

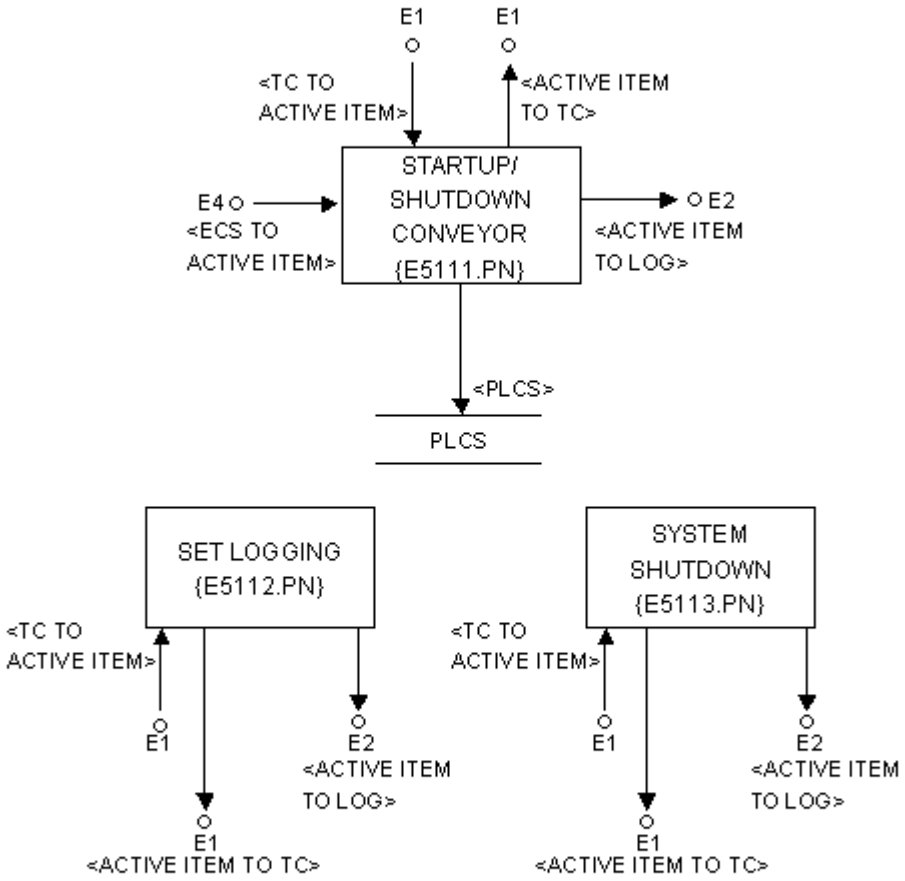

3.2.24.5.1.1.1 **E5111.PN - Startup/Shutdown Conveyor**

Process Name	Process ID #	Date
Startup/Shutdown Conveyor	E5111.PN	July 9, 2001

Requirement ID #(s)

SECS-RC1.1, SECS-RC1.1.10, SECS-RC1.2, SECS-RC2.6, SECS-RC1.1.15

Process Narrative

This process accepts a User Interface request (A01) from the Active Item Conveyor Traffic Controller Communications (E1.PN) process to either startup or shutdown the Active Item Conveyor PLCs. This process will format a message (08) and send it to the Active Item Conveyor Message Buffering (E4.PN) process to be forwarded to the Active Item Conveyor PLCs. The status of the PLCs will be updated in the <PLCS> table of the database. If invalid data was received, an error message is formatted and sent to the Active Item Conveyor Traffic Controller Communications (E1.PN) process. This process sends formatted messages to the Active Item Conveyor Message Logger (E2.PN) process for possible logging.

3.2.24.5.1.1.2 **E5112.PN - Set Logging**

Process Name	Process ID #	Date
Set Logging	E5112.PN	July 9, 2001

Requirement ID #(s)

SECS-RC1.1, SECS-RC1.1.10, SECS-RC2.5, SECS-RC4.3, SECS-RC1.1.15

Process Narrative

This process accepts a User Interface request (A07) from the Active Item Conveyor Traffic Controller Communications (E1.PN) process to turn logging either on or off. If invalid data was received, an error message is formatted and sent to the Active Item Conveyor Traffic Controller Communications (E1.PN) process. This process sends formatted messages to the Active Item Conveyor Message Logger (E2.PN) process for possible logging.

3.2.24.5.1.1.3 **E5113.PN - System Shutdown (Software)**

Process Name	Process ID #	Date
System Shutdown (Software)	E5113.PN	July 9, 2001

Requirement ID #(s)

SECS-RC1.1, SECS-RC1.1.10, SECS-RC2.6, SECS-RC1.1.15

Process Narrative

This process accepts a User Interface request (A09) from the Active Item Conveyor Traffic Controller Communications (E1.PN) process to set a flag to shutdown the Active Item Conveyor Subcontroller. If invalid data was received, an error message is formatted and sent to the Active Item Conveyor Traffic Controller Communications (E1.PN) process. This process sends formatted messages to the Active Item Conveyor Message Logger (E2.PN) process for possible logging.

3.2.24.5.1.2 **E513.PN - Check Reject Station**

Process Name	Process ID #	Date
Check Reject Station	E513.PN	

Requirement ID #(s)
SECS-RC1.1, SECS-RC1.1.10, SECS-RC2.11

Process Narrative

This process checks the database for the current Reject Station for the Active Item Conveyor Traffic Controller (E1.PN). Upon receiving a movement message, this process will read the database <ALAN> table to check for the current reject lane for the Active Item Conveyor. If there is an invalid read for the database, an error message is formatted and sent to the Active Item Conveyor Traffic Controller Communications (E1.PN) process. This process sends formatted messages to the Active Item Conveyor Message Logger (E2.PN) process for possible logging.

3.2.24.5.1.3 **E514.PN - Update Reject Station**

Process Name	Process ID #	Date
Update Reject Station	E514.PN	July 9, 2001

Requirement ID #(s)
SECS-RC1.1, SECS-RC1.1.10, SECS-RC2.11

Process Narrative

This process accepts an Update Reject Station request (T40) from the Active Item Conveyor Traffic Controller (E1.PN). Upon receiving the message, this process will update the database <ALAN> table to change the reject lane for the Active Item Conveyor. If invalid data was received, an error message is formatted and sent to the Active Item Conveyor Traffic Controller Communications (E1.PN) process. This process sends formatted messages to the Active Item Conveyor Message Logger (E2.PN) process for possible logging.

The task performed by this process is to update 'Reject lanes' based on operator input. This allows a supervisor to set the reject lane active or inactive as workloads change. The new lane statuses for the requested area are recorded in the <ALAN> table of the database.

3.2.24.5.2 **E53.DFD**

Process ID #	Date
E53.DFD - Manage DSS Transactions	July 9, 2001

Requirement ID #(s)

SECS-RC1.1, SECS-RC1.1.10, SECS-RC1.2, SECS-RC1.3, SECS-RC1.4

Data Flow Diagram

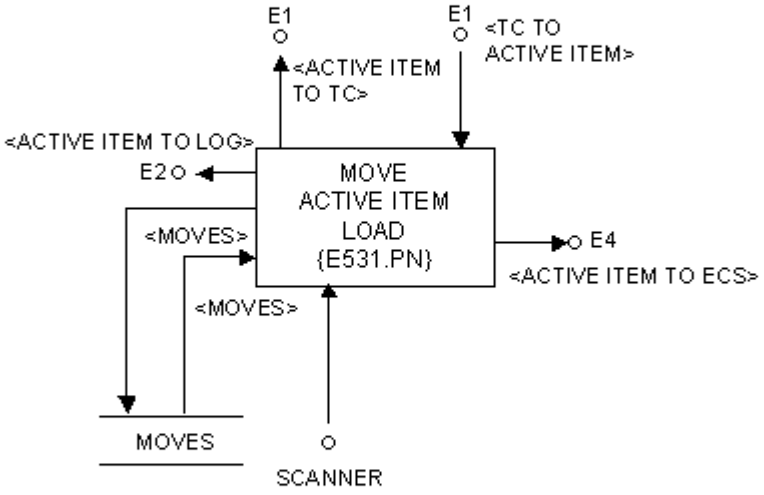

3.2.24.5.2.1 **E531.PN - Move Active Item Load**

Process Name	Process ID #	Date
Move Active Item Load	E531.PN	July 9, 2001

Requirement ID #(s)

SECS-RC1.1, SECS-RC1.1.10, SECS-RC1.2, SECS-RC1.3, SECS-RC1.4, SECS-RC2.11, SECS-RC12.4, SECS-RC1.1.15

Process Narrative

Requests coming to this process can come from either the Upper Tier (SMM) or User Interface (M01) through the Active Item Conveyor Traffic Controller Communications (E1.PN) process, or through various processes that handle keypad interface requests. This internal active item process is Create Active Item Package Move (E531.PN). The Active Item conveyor destination is obtained and the move is initiated through a New Active Item Package Move message (01). The proper message is formatted and sent to the Active Item Conveyor Message Buffering Process (E4.PN). This process sends formatted messages to the Active Item Conveyor Message Logger (E2.PN) process for possible logging.

3.2.24.5.3 **E54.DFD**

Process ID #	Date
E54.DFD - Manage Active Item Conveyor Controller Transactions	July 9, 2001

Requirement ID #(s)

SECS-RC1.1, SECS-RC1.1.10, SECS-RC1.2, SECS-RC1.3, SECS-RC1.4, SECS-RC3.1, SECS-RC4.2, SECS-RC4.3, SECS-RC5

Data Flow Diagram

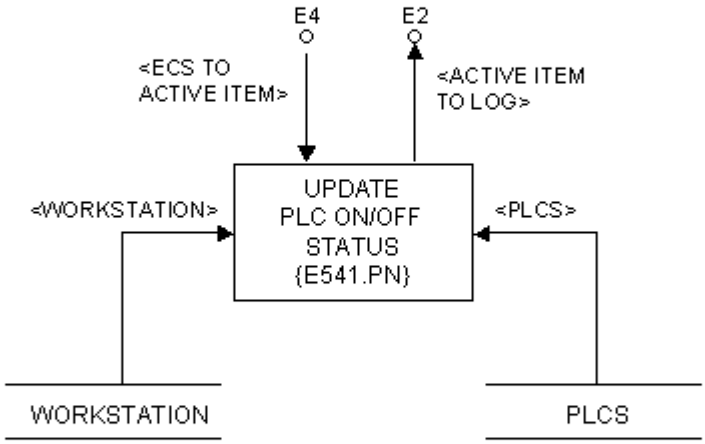

3.2.24.5.3.1 **E541.PN - Startup/Shutdown Complete 07 Message**

Process Name	Process ID #	Date
Startup/Shutdown Complete 07 Message	E541.PN	July 9, 2001

Requirement ID #(s)

SECS-RC1.1, SECS-RC1.1.10, SECS-RC1.2, SECS-RC1.3, SECS-RC1.4, SECS-RC3.1, SECS-RC4.2, SECS-RC4.3, SECS-RC5

Process Narrative

This process accepts a Startup/Shutdown Complete message (07) from the Active Item Conveyor Message Buffering (E4.PN) process that is sent from the Active Item Conveyor PLC. This message updates 'Workstations' to reflect the PLC zone status change. The possible modes '4' for a startup acknowledgment, and '5' for a shutdown acknowledgment. Modes '4' and '5' are sent in response to a A09 Startup/Shutdown message. The process then sends a formatted message to the Active Item Conveyor Message Logger (E2.PN) process for possible logging.

3.2.25 **G.DFD**

Process ID #	Date
G.DFD - TRIAX Controller	January 5, 2001

Requirement ID #(s)

SECS-RC1, SECS-RC1.1, SECS-RC1.1.14, SECS-RC1.3, SECS-RC1.4, SECS-RC3, SECS-RC3.1, SECS-RC4, SECS-RC4.3, SECS-RC5, SECS-RC1.1.14, SECS-RI28

Data Flow Diagram

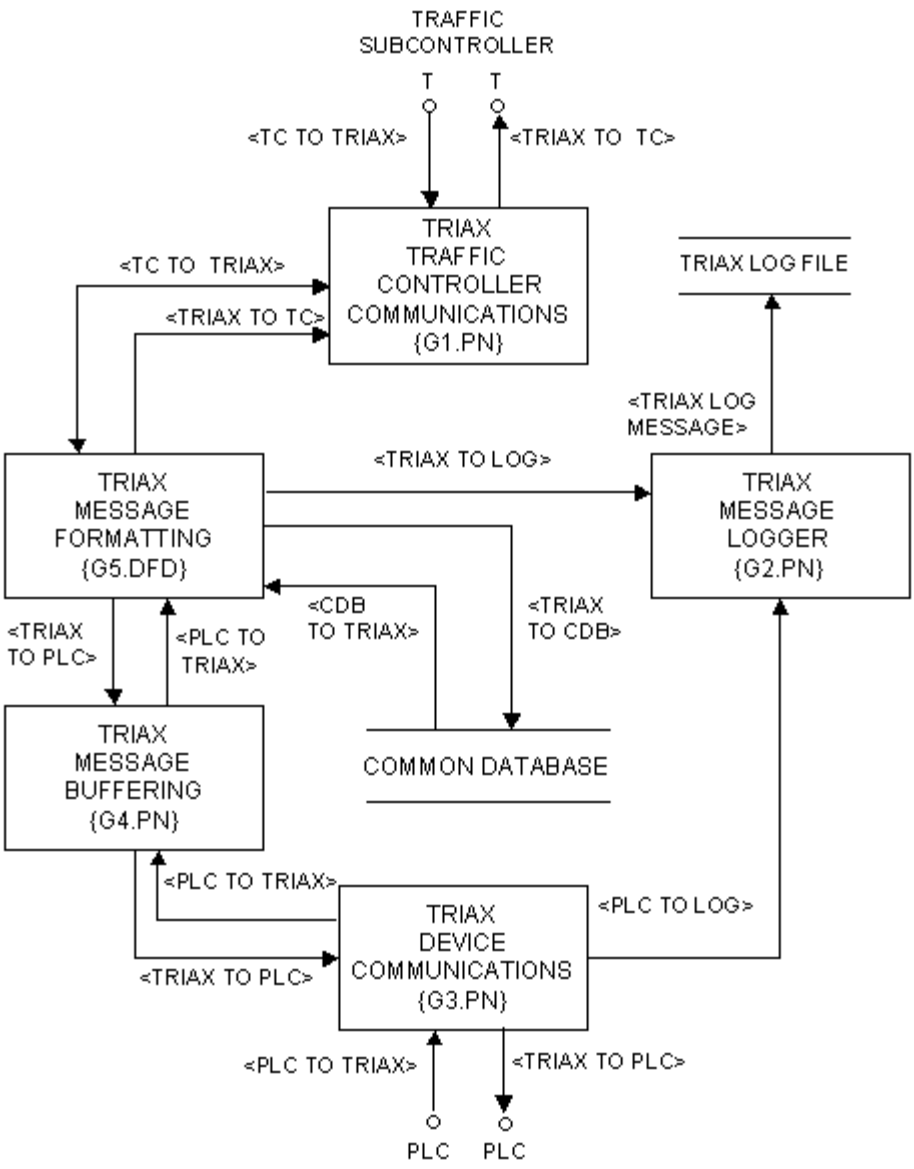

3.2.25.1 G1.PN - TRIAX Traffic Controller Communications

Process Name	Process ID #	Date
TRIAX Traffic Controller Communications	G1.PN	January 5, 2001

Requirements ID #(s)

SECS-RC1, SECS-RC1.1.14, SECS-RC1.2, SECS-RC1.3, SECS-RC1.4, SECS-RC5, SECS-RI1, SECS-RC3, SECS-RC3.2, SECS-RC3.3, SECS-RI28

Process Narrative

This process receives messages from the Traffic Controller (T.DFD) and passes them onto the TRIAX Message Formatting Process. This process receives response and status messages from the TRIAX Message Formatting Process and sends them to the Traffic Controller (T.DFD). This process handles all message transfer protocols and handshaking between the Traffic Controller (T.DFD) and the TRIAX Subcontroller (G.DFD). This process handles message transmission from memory or hardware.

If invalid data was received, an error message is formatted and sent to the TRIAX Traffic Controller Communications Process (G1.PN).

This process sends formatted messages to the TRIAX Message Logger Process (G2.PN) for possible logging.

3.2.25.2 G2.PN - TRIAX Message Logger

Process Name	Process ID #	Date
TRIAX Message Logger	G2.PN	January 5, 2001

Requirements ID #(s)
SECS-RC4, SECS-RC4.3

Process Narrative

This process receives messages from the TRIAX Message Formatting Process and the TRIAX Device Communications Process and if logging is enabled logs the message to the TRIAX Log File.

If invalid data was received, an error message is formatted and sent to the TRIAX Traffic Controller Communications Process (G1.PN).

3.2.25.3 G3.PN - TRIAX Device Communications

Process Name	Process ID #	Date
TRIAX Device Communications	G3.PN	January 5, 2001

Requirements ID #(s)

SECS-RI8, SECS-RC3, SECS-RC3.1, SECS-RC1, SECS-RC1.1.14, SECS-RC1.2, SECS-RC1.3, SECS-RC1.4, SECS-RC5, SECS-RI28

Process Narrative

This process receives messages from the TRIAX Message Buffering Process and transmits them to the TRIAX Subcontroller. This process receives acknowledgements and status responses from the TRIAX Subcontroller and forwards them to the TRIAX Message Buffering Process for further processing. This process sends device messages to the TRIAX Message Logger Process for logging. This process handles all transfer protocols and handshaking required by the device communications.

If invalid data was received, an error message is formatted and sent to the TRIAX Traffic Controller Communications Process (G1.PN).

This process sends formatted messages to the TRIAX Message Logger Process (G2.PN) for possible logging.

3.2.25.4 G4.PN - TRIAX Message Buffering

Process Name	Process ID #	Date
TRIAX Message Buffering	G4.PN	January 5, 2001

Requirements ID #(s)
SECS-RC3, SECS-RC3.1, SECS-RC4, SECS-RC4.2, SECS-RI28

Process Narrative

This process will receive messages from the TRIAX Message Formatting Process and the TRIAX Device Communications Process and insert and extract the messages to and from their respective memory buffers.

If invalid data was received, an error message is formatted and sent to the TRIAX Traffic Controller Communications Process (G1.PN).

3.2.25.5 **G5.DFD**

Process ID #	Date
G5.DFD - TRIAX Message Formatting	January 5, 2001

Requirement ID #(s)

SECS-RC1, SECS-RC1.1, SECS-RC1.1.14, SECS-RC1.3, SECS-RC1.4, SECS-RC3, SECS-RC3.1, SECS-RC4, SECS-RC4.3, SECS-RC5, SECS-RC1.1.14, SECS-RI28

Data Flow Diagram

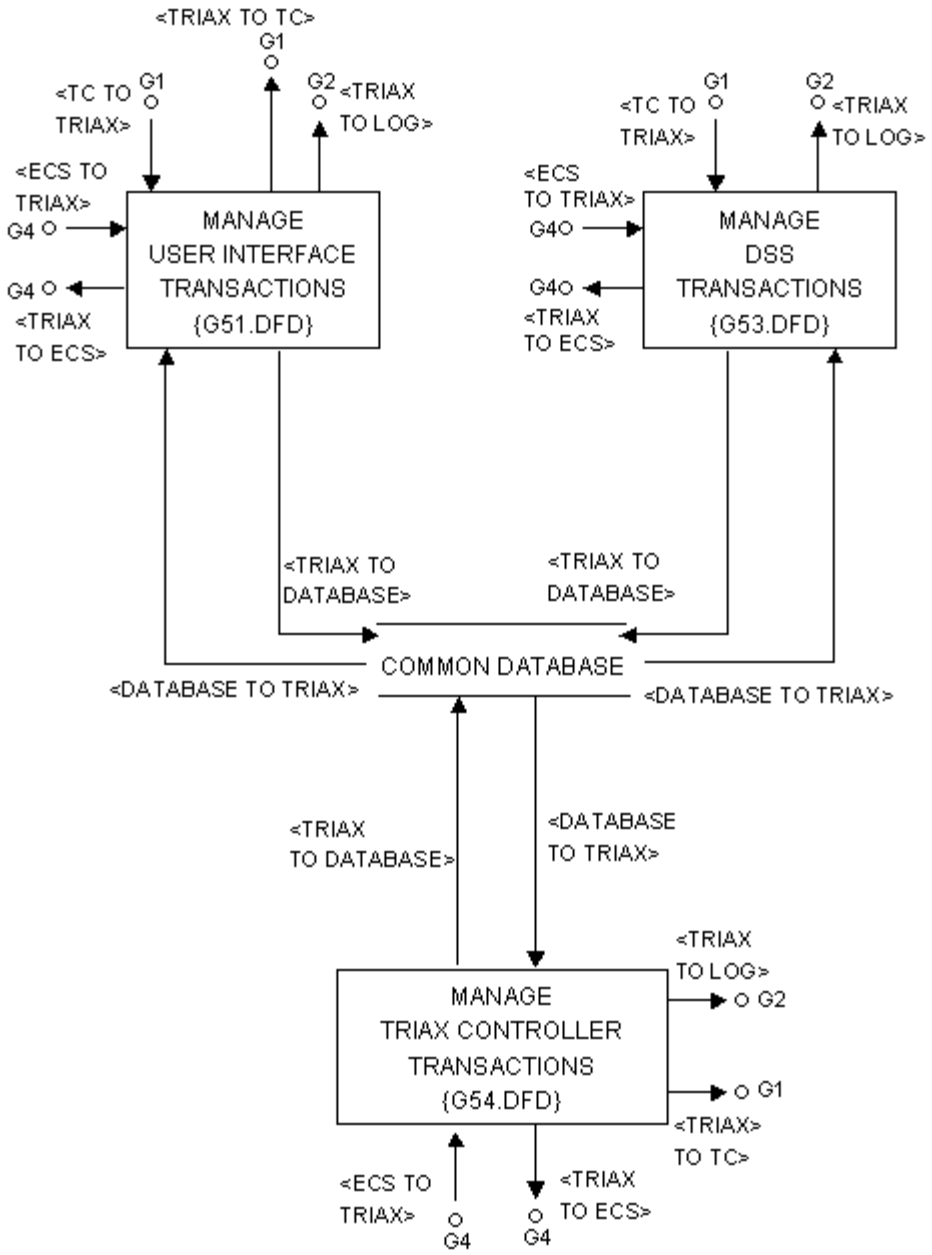

3.2.25.5.1 **G51.DFD**

Process ID #	Date
G51.DFD - Manage User Interface Transactions	January 5, 2001

Requirement ID #(s)

SECS-RC1, SECS-RC1.1, SECS-RC1.1.14, SECS-RC1.3, SECS-RC1.4, SECS-RC3, SECS-RC3.1, SECS-RC4, SECS-RC4.3, SECS-RC5, SECS-RC1.1.14, SECS-RI28

Data Flow Diagram

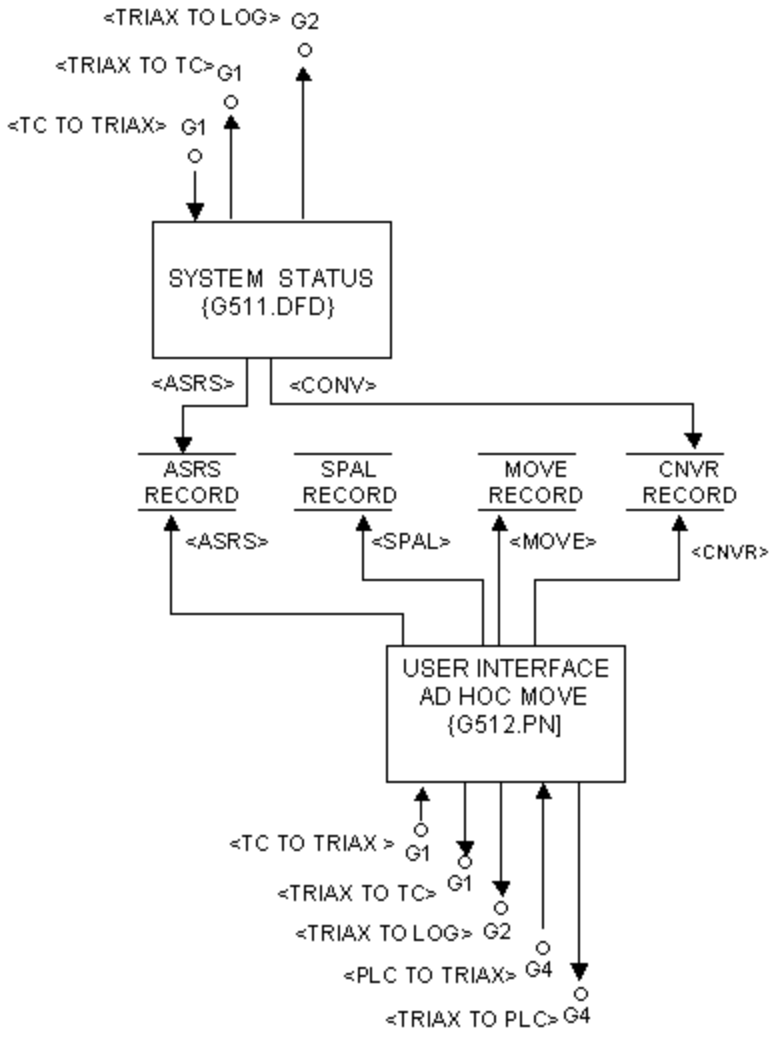

3.2.25.5.1.1 **G511.DFD**

Process ID #	Date
G511.DFD - System Status	January 5, 2001

Requirement ID #(s)

SECS-RC1, SECS-RC1.1, SECS-RC1.1.14, SECS-RC1.3, SECS-RC1.4, SECS-RC3, SECS-RC3.1, SECS-RC4, SECS-RC4.3, SECS-RC5, SECS-RC1.1.14, SECS-RI28

Data Flow Diagram

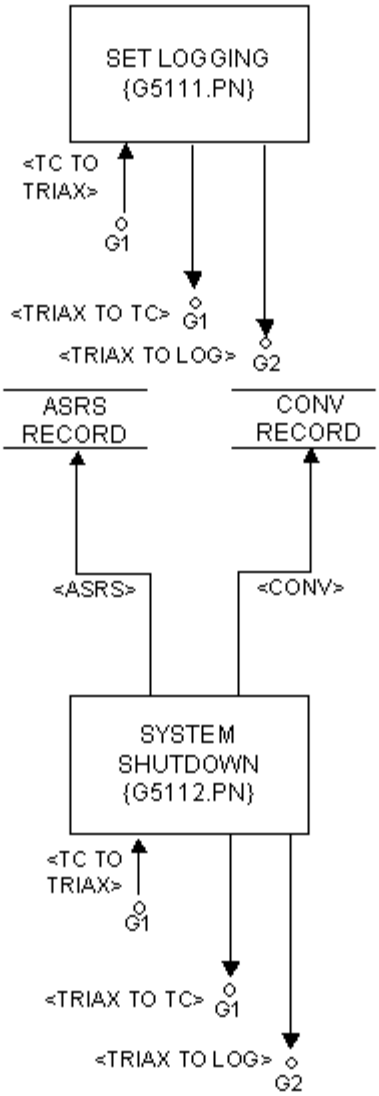

3.2.25.5.1.1.1 **G5111.PN - Set Logging**

Process Name	Process ID #	Date
Set Logging	G5111.PN	January 5, 2001

Requirements ID #(s)
SECS-RC3, SECS-RC3.1, SECS-RC4, SECS-RC4.3, SECS-RC5

Process Narrative

This process accepts a User Interface request from the TRIAX Traffic Controller Communications Process (G1.PN) to turn the UserLog.Post Process either on or off. Either UserLog.TurnOn or UserLog.TurnOff is called depending on the input parameter. If invalid data was received, an error message is formatted and sent to the TRIAX Traffic Controller Communications Process (G1.PN). This process sends formatted messages to the TRIAX Message Logger Process (G2.PN) for possible logging.

3.2.25.5.1.1.2 **G5112.PN - System Shutdown**

Process Name	Process ID #	Date
System Shutdown	G5112.PN	January 5, 2001

Requirements ID #(s)

SECS-RC3, SECS-RC3.1, SECS-RC4, SECS-RC4.3, SECS-RC5

Process Narrative

This process accepts a User Interface request from the TRIAX Traffic Controller Communications Process (G1.PN) to set a flag to shut down the Unit Controller, including the Link objects it uses. The TRIAX Crane (ASRS) and Conveyor (CONV) Records are updated accordingly. If invalid data was received, an error message is formatted and sent to the TRIAX Traffic Controller Communications Process (G1.PN). This process sends formatted messages to the TRIAX Message Logger Process (G2.PN) for possible logging.

3.2.25.5.1.2 G512.PN - User Interface Ad Hoc Move

Process Name	Process ID #	Date
User Interface Ad Hoc Move	G512.PN	January 5, 2001

Requirements ID #(s)

SECS-RC1, SECS-RC1.1, SECS-RC1.1.14, SECS-RC1.3, SECS-RC1.4, SECS-RC3, SECS-RC3.1, SECS-RC4, SECS-RC4.3, SECS-RC5, SECS-RC1.1.14, SECS-RI28

Process Narrative

This process processes Ad Hoc Moves from the User Interface. If valid data was received this message is processed as an SMM (G52.DFD).

If invalid data was received, an error message is formatted and sent to the TRIAX Traffic Controller Communications Process (G1.PN).

This process sends formatted messages to the TRIAX Message Logger Process (G2.PN) for possible logging.

3.2.25.5.2 **G52.DFD**

Process ID #	Date
G52.DFD - Manage DSS Transactions	January 5, 2001

Requirement ID #(s)

SECS-RC1, SECS-RC1.1, SECS-RC1.1.14, SECS-RC1.3, SECS-RC1.4, SECS-RC3, SECS-RC3.1, SECS-RC4, SECS-RC4.3, SECS-RC5, SECS-RC1.1.14, SECS-RI28

Data Flow Diagram

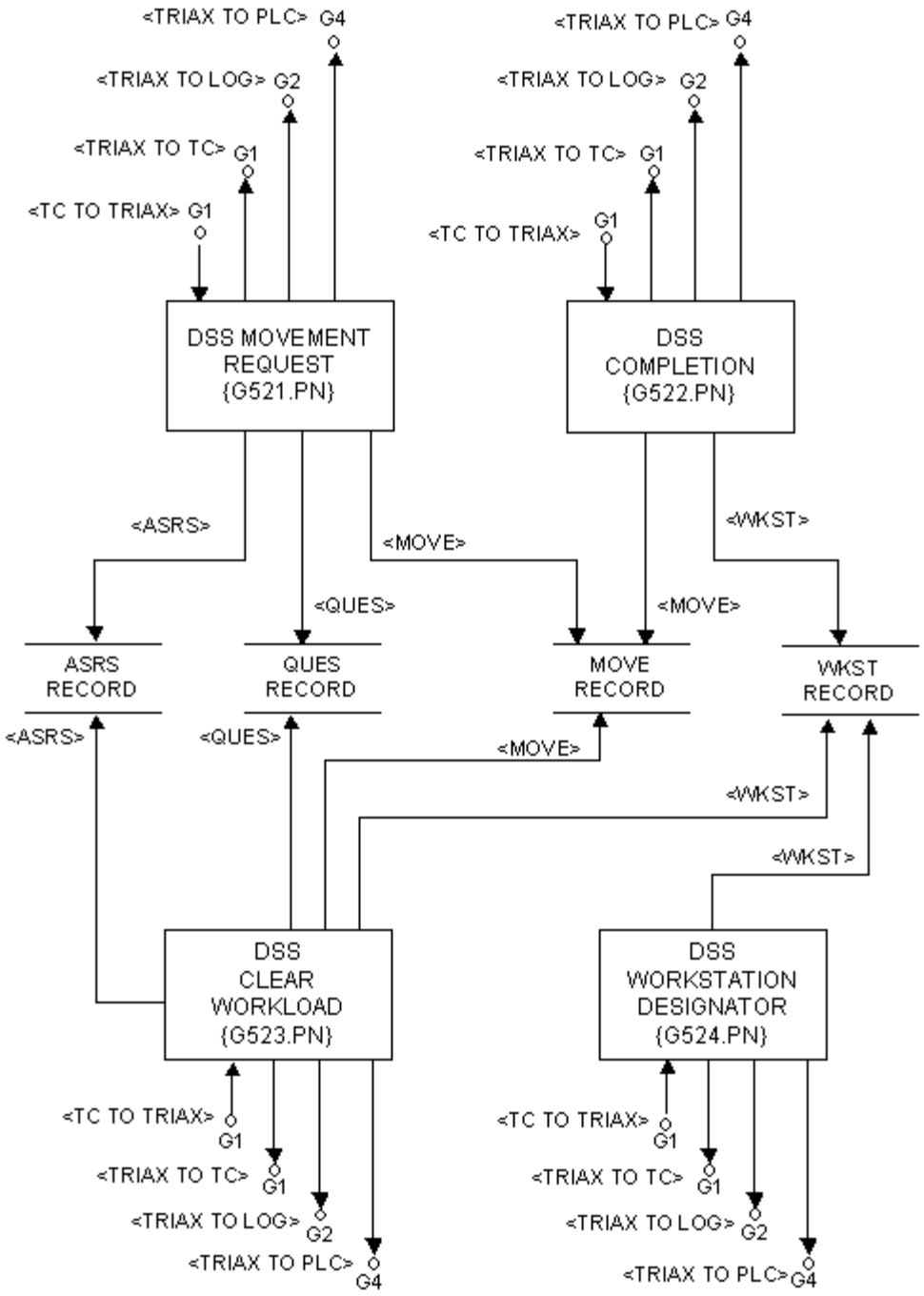

3.2.25.5.2.1 G521.PN - DSS Movement Request

Process Name	Process ID #	Date
DSS TRIAX Crane Request	G521.PN	January 5, 2001

Requirements ID #(s)

SECS-RC1, SECS-RC1.1, SECS-RC1.1.14, SECS-RC1.3, SECS-RC1.4, SECS-RC3, SECS-RC3.1, SECS-RC4, SECS-RC4.3, SECS-RC5, SECS-RC1.1.14, SECS-RI28

Process Narrative

This process accepts an "R" or "E" flag Standard Movement Message (SMM) from the TRIAX Traffic Controller Communications module (G1.PN), to move a pallet load from a specified rack storage location and deliver it to a workstation. First, a Move Record (MOVE) with source and destination locations is generated.

If a Move ID record already exists which indicates this material is enroute either to or from storage then a deeper analysis must be made. If the material is enroute to storage and the storage location matches the source location then a request will be considered for this load upon its arrival in its storage location. However, if the material is enroute to storage and there is a mismatch in storage locations then the request will be ignored. If the material is enroute from a storage location (i.e. this is a duplicate request) then the request will also be ignored.

Next, the destination area is categorized as by workstation or by functional area (a group of workstations) and the relevant workstation or functional area examined for available space. If no space is available this DSS request is queued until space becomes available in the workstation or functional area and no further processing occurs at this time. However, if space is immediately available an attempt is made to schedule a retrieval from rack storage.

Finally, if the TRIAX Crane Record (ASRS) indicates that the TRIAX Crane is available for immediate use then the appropriate workstation is selected and a pickup command is sent to the TRIAX Crane PLC. A deposit message completes the movement and is responsible for depositing a load on the outbound P&D stand. If the TRIAX Crane Record (ASRS) indicates that the TRIAX Crane is not available for immediate use, the Move ID is stored in the Queued Work Record (QUES) as a pending transaction for later processing.

If invalid data was received, an error message is formatted and sent to the TRIAX Traffic Controller Communications Process (G1.PN).

This process sends formatted messages to the TRIAX Message Logger Process (G2.PN) for possible logging.

3.2.25.5.2.2 G522.PN - DSS Pick/Stow Completion

Process Name	Process ID #	Date
DSS Pick/Stow Completion	G522.PN	January 5, 2001

Requirements ID #(s)

SECS-RC1, SECS-RC1.1, SECS-RC1.1.14, SECS-RC1.3, SECS-RC1.4, SECS-RC3, SECS-RC3.1, SECS-RC4, SECS-RC4.3, SECS-RC5, SECS-RC1.1.14, SECS-RI28

Process Narrative

This process accepts a "C" flag Standard Movement Message (SMM) from the TRIAX Traffic Controller Communications Process (G1.PN), to return a storage location. The Move Record (MOVE) is updated and a Tracking Move Message is sent to the Conveyor PLC. If necessary, the Workstation (WKST) record is updated to reflect the material that is being processed at a workstation.

If invalid data was received, an error message is formatted and sent to the TRIAX Traffic Controller Communications Process (G1.PN).

This process sends formatted messages to the TRIAX Message Logger Process (G2.PN) for possible logging.

3.2.25.5.2.3 G523.PN - DSS Clear Workload

Process Name	Process ID #	Date
DSS Clear Workload	G523.PN	January 5, 2001

Requirements ID #(s)

SECS-RC1, SECS-RC1.1, SECS-RC1.1.14, SECS-RC1.3, SECS-RC1.4, SECS-RC3, SECS-RC3.1, SECS-RC4, SECS-RC4.3, SECS-RC5, SECS-RC1.1.14, SECS-RI28

Process Narrative

This process accepts a Standard Movement Message (SMM) from the TRIAX Traffic Controller Communications Process (G1.PN), to clear the workload for the specified workstation. This process results in no further workload being assigned to this workstation.

One category of future workload is retrieval requests that have been placed in the Queued Workload (QUES) for a TRIAX Crane but not processed yet. If these requests were originally for this specific workstation then they will be deleted.

Another category of future workload is DSS requests that haven't been passed through to the TRIAX Crane to be queued or scheduled. If a DSS request exists for the functional area and other workstations remain logged in then these requests will be kept and processed by other workstations later. If, however, as a result of this logging out no workstations remain logged in then all requests of this functional area will be deleted. If DSS requests exist for this specific workstation then those requests will be deleted.

The above categories ECS was able to, and did prevent movement assignment. It is also possible for movement to be under way. A TRIAX Crane may be in the process of placing a load on its outbound P&D stand or a tracking move taking a load to this workstation may be underway. In either case, a move underway cannot be reversed. This material will eventually find its way to the physical workstation and will be processed as described in DSS Movement Request (Q521.PN).

If invalid data was received, an error message is formatted and sent to the TRIAX Traffic Controller Communications Process (G1.PN).

This process sends formatted messages to the TRIAX Message Logger Process (G2.PN) for possible logging.

3.2.25.5.2.4 G524.PN - DSS Workstation Designator

Process Name	Process ID #	Date
DSS Workstation Designator	G524.PN	January 5, 2001

Requirements ID #(s)

SECS-RC1, SECS-RC1.1, SECS-RC1.1.14, SECS-RC1.3, SECS-RC1.4, SECS-RC3, SECS-RC3.1, SECS-RC4, SECS-RC4.3, SECS-RC5, SECS-RC1.1.14, SECS-RI28

Process Narrative

This process accepts a Standard Movement Message (SMM) from the TRIAX Traffic Controller Communications Process (G1.PN) to assign workstation functions for picks, location surveys, or inventory by updating the Workstation (WKST) Record. If DSS requests are already pending for this work type then the requests will trigger workload being routed to this workstation, as described in the Crane Request process narrative (G521.PN). The work types of stow and inspection does not send a workstation designation message. Instead, every pallet of these types must given a specific workstation as a destination in each Crane Request message.

If invalid data was received, an error message is formatted and sent to the TRIAX Traffic Controller Communications Process (G1.PN).

This process sends formatted messages to the TRIAX Message Logger Process (G2.PN) for possible logging.

3.2.25.5.3 **G53.DFD**

Process ID #	Date
G53.DFD - Manage Triax Controller Transactions	January 5, 2001

Requirement ID #(s)

SECS-RC1, SECS-RC1.1, SECS-RC1.1.14, SECS-RC1.3, SECS-RC1.4, SECS-RC3, SECS-RC3.1, SECS-RC4, SECS-RC4.3, SECS-RC5, SECS-RC1.1.14, SECS-RI28

Data Flow Diagram

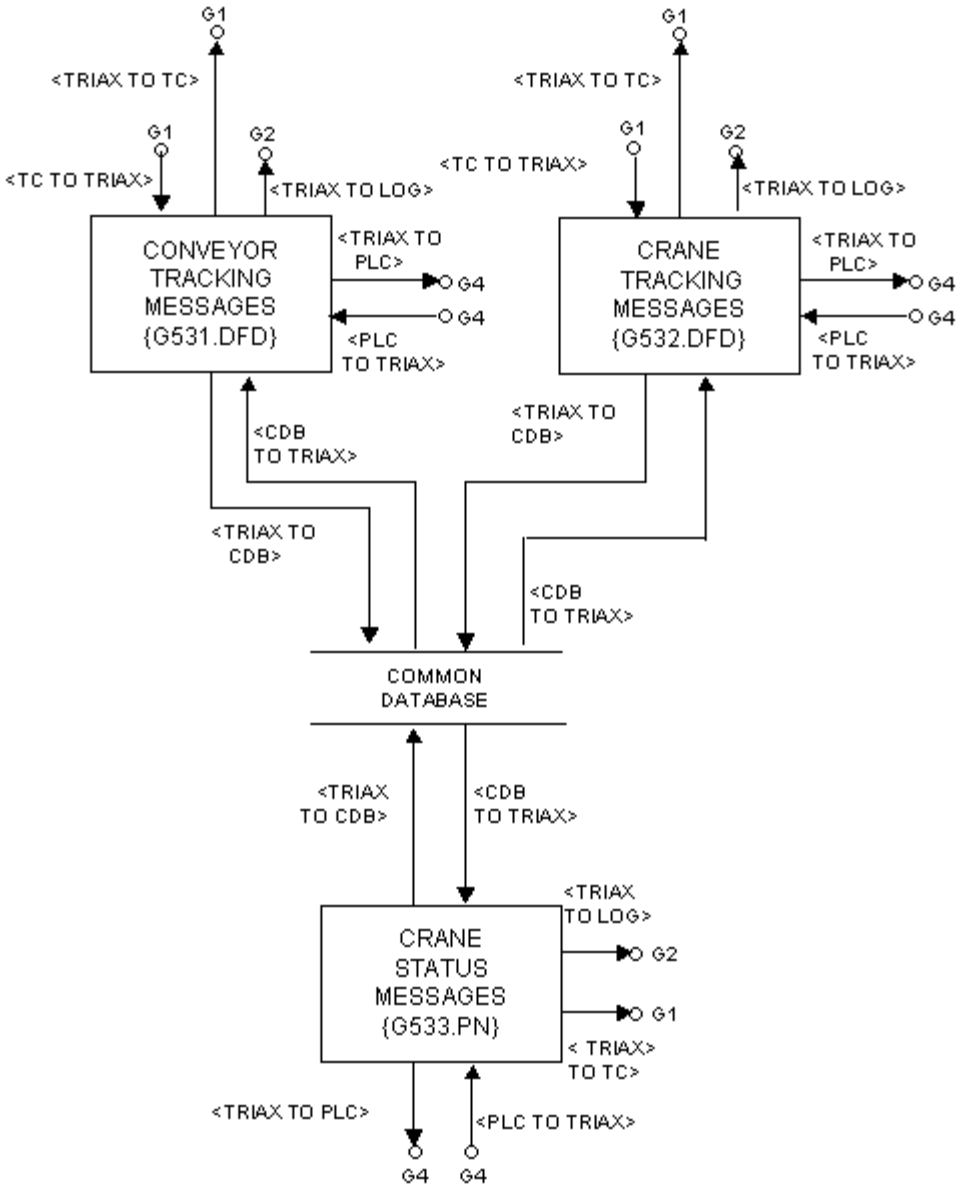

3.2.25.5.3.1 **G531.DFD**

Process ID #	Date
G531.DFD - Conveyor Tracking Messages	January 5, 2001

Requirement ID #(s)

SECS-RC1, SECS-RC1.1, SECS-RC1.1.14, SECS-RC1.3, SECS-RC1.4, SECS-RC3, SECS-RC3.1, SECS-RC4, SECS-RC4.3, SECS-RC5, SECS-RC1.1.14, SECS-RI28

Data Flow Diagram

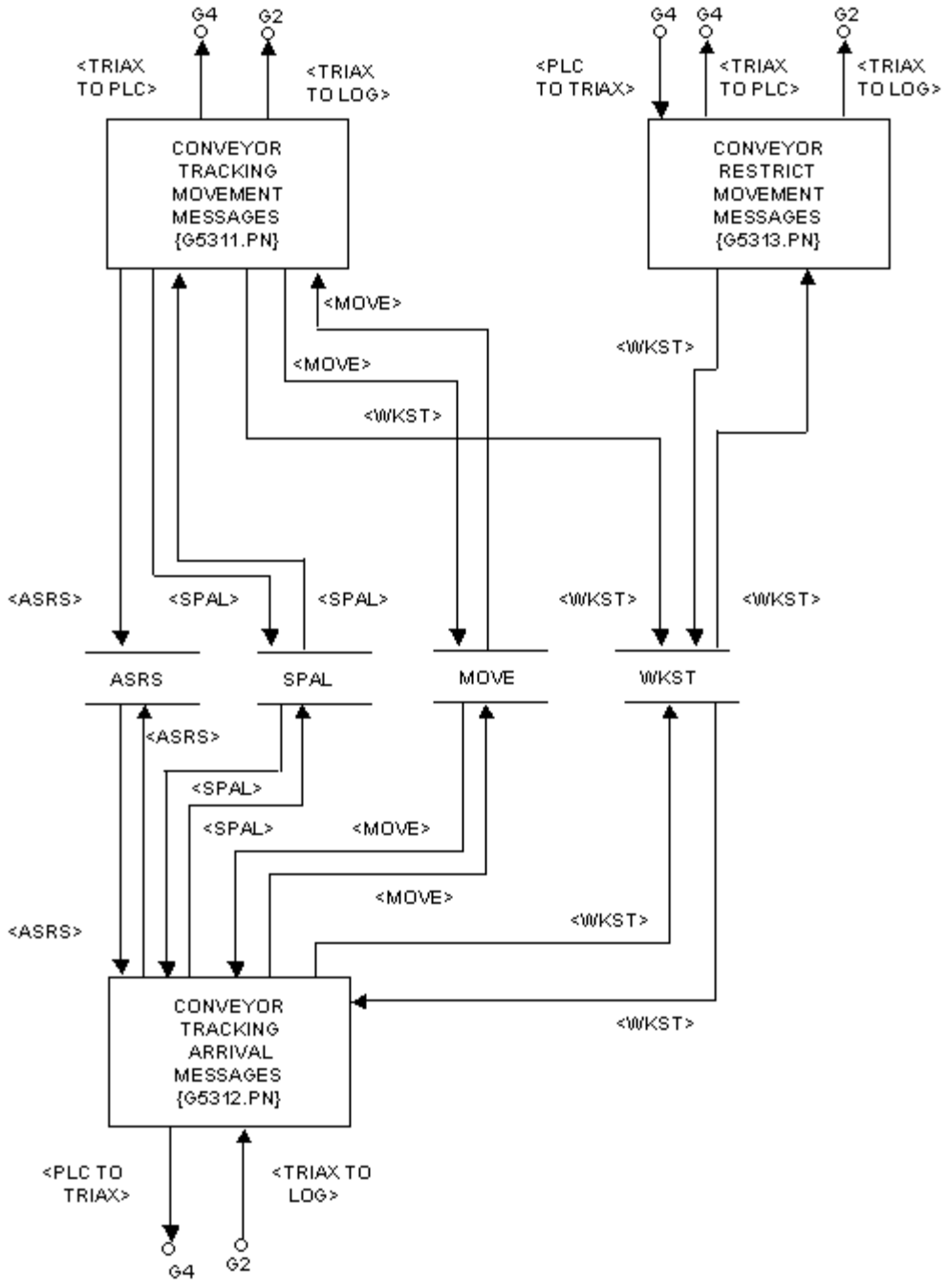

3.2.25.5.3.1.1 **G5311.PN -Conveyor Tracking Arrival Messages**

Process Name	Process ID #	Date
Conveyor Tracking Arrival Messages Page 1 of 2	G5311.PN	January 5, 2001

Requirements ID #(s)

SECS-RC1, SECS-RC1.1, SECS-RC1.1.14, SECS-RC1.3, SECS-RC1.4, SECS-RC3, SECS-RC3.1, SECS-RC4, SECS-RC4.3, SECS-RC5, SECS-RC1.1.14, SECS-RI28

Process Narrative

This process accepts a Conveyor Tracking Arrival Message from the TRIAX Message Buffering Process (G4.PN) upon arrival of the load at its intended or final destination. The Move (MOVE), Slave Pallet (SPAL) and Workstation (WKST) records are updated.

The Conveyor Tracking Arrival Messages are:

- Conveyor Storage Location Pallet Scan (01): This message is sent from the Conveyor PLC to Host when the PLC barcode scanner detects a valid storage location pallet barcode at one of three barcode scanners located on the recirculation loop.
- Conveyor Storage Location Pallet Arrival at Inbound to Crane Location (03): This message is sent from the Conveyor PLC to Host when the PLC diverts a storage location pallet into a crane inbound station. A Conveyor PLC controlled scanning device is located at each of the Inbound to Crane Locations, (‘101’-‘104’).
- Conveyor Storage Location Pallet Arrival at Inbound to Crane Location (08): This message is sent from the Host to the Conveyor PLC when the ECS receives the message type 03 from the Conveyor PLC.
- Conveyor Storage Location Pallet Arrival at Operator Workstation (07). This message is sent from the Conveyor PLC to Host when the PLC diverts a storage location pallet into an operator workstation lane.
- Conveyor Storage Location Pallet Arrival at Operator Workstation Acknowledge (10). This message is sent from the Host to the Conveyor PLC when the ECS receives the message type 07 from the Conveyor PLC.
- Conveyor Confirm Arrival At Crane Outbound Station (16). This message is sent from the Host to the Conveyor PLC when the Crane has successfully deposited a storage location on the Outbound P&D location in the Triax Crane to Host message type 61.
- Conveyor Confirm Arrival At Crane Outbound Station Acknowledge (09). This message is sent from the Conveyor PLC to Host when the Conveyor receives the message type 16 from the Host. The Conveyor PLC is free to release the slave pallet.

A Conveyor Storage Location Pallet Scan (01) triggers either a Conveyor Move Storage Location, No Empty Needed (02) or Conveyor Move Storage Location, Empty Needed (04) as described in Conveyor Tracking Movement Messages (G5312.PN).

Process Name	Process ID #	Date
Conveyor Tracking Arrival Messages Page 2 of 2	G5311.PN	January 5, 2001

Requirements ID #(s)
SECS-RC1, SECS-RC1.1, SECS-RC1.1.14, SECS-RC1.3, SECS-RC1.4, SECS-RC3, SECS-RC3.1, SECS-RC4, SECS-RC4.3, SECS-RC5, SECS-RC1.1.14, SECS-RI28

Process Narrative

A special case of Conveyor Storage Location Pallet Scan (01) occurs at the scanner located at the dimensioning and weighing. At this location, the Conveyor PLC tests additionally for dimension and weight data. If the slave pallet passes the dimension and weight tests, the Conveyor PLC sends the Conveyor Storage Location Pallet Scan (01). If the slave pallet fails the dimension and weigh tests, the Conveyor PLC disallows movement of the slave pallet to the crane inbound locations and controls the movement of the slave pallet back to the origin workstation lane. The Conveyor PLC additionally displays a message back to the operator via Panel View screen notifying the operator that the pallet will return.

A Conveyor Storage Location Pallet Arrival at Inbound to Crane Location Acknowledge (08) will ultimately trigger a Crane movement. If the load arrives at its intended Crane input P&D and the Crane is in both store and retrieve mode and the Crane is idle and the Crane is online a command will be sent to the Crane PLC to store the load and the Crane (ASRS) and Move (MOVE) records are updated. If the load arrives at its intended aisle but the Crane isn't immediately available to store the load (e.g. transaction in progress, exercise mode in effect or Crane is in a recovery state), then this arrival is queued for future storage.

If the load arrives at an aisle other than its intended aisle then the Crane PLC will place this material on the outbound P&D location for the aisle. The load destination will remain unchanged and the slave pallet will be picked up from its inbound P&D stand and placed on its outbound stand. Once the load arrives at the outbound P&D, a message will be sent to the Conveyor PLC to redirect the slave pallet to the correct aisle.

A Conveyor Storage Location Pallet Arrival at Operator Workstation (07) does not trigger further message traffic.

A Conveyor Confirm Arrival At Crane Outbound Station Acknowledge (09) triggers a Conveyor Move Storage Location, No Empty Needed (02) or Conveyor Move Storage Location, Empty Needed (04) as described in Conveyor Tracking Movement Messages (G5312.PN).

If invalid data was received, an error message is formatted and sent to the TRIAX Traffic Controller Communications Process (G1.PN).

This process sends formatted messages to the TRIAX Message Logger Process (G2.PN) for possible logging.

3.2.25.5.3.1.2 **G5312.PN - Conveyor Tracking Movement Messages**

Process Name	Process ID #	Date
Conveyor Tracking Movement Messages	G5312.PN	January 5, 2001

Requirements ID #(s)

SECS-RC1, SECS-RC1.1, SECS-RC1.1.14, SECS-RC1.3, SECS-RC1.4, SECS-RC3, SECS-RC3.1, SECS-RC4, SECS-RC4.3, SECS-RC5, SECS-RC1.1.14, SECS-RI28

Process Narrative

This process accepts a Conveyor Tracking Arrival Message from the TRIAX Message Buffering Process (G4.PN) upon arrival of the load at its intended or final destination. The Move (MOVE), Slave Pallet (SPAL) and Workstation (WKST) records are updated.

The Conveyor Tracking Movement Messages are:

- Conveyor Move Storage Location Pallet, No Empty Needed (02). This Host to Conveyor PLC message is a response to the Triax Conveyor PLC to Host message type 01 or Host to Conveyor PLC message type 16 described in G5311.PN. It directs storage location pallet to destination and does not require the Conveyor PLC to provide an empty military pallet
- Conveyor Move Storage Location Pallet, Empty Needed (04). This Host to Conveyor PLC message is a response to the Triax Conveyor PLC to Host message type 01 or Host to Conveyor PLC message type 16 G5311.PN. It directs storage location pallet to destination and requests the PLC to provide an empty military pallet.
- Conveyor Release Storage Location Pallet From Operator Workstation (06). This message is a response to the DSS Completion SMM. It directs storage location pallet from conveyor source to a storage location in the rack storage. However, the pallet is not physically released to the recirculation line until the operator activates a manual switch.
-

If invalid data was received, an error message is formatted and sent to the TRIAX Traffic Controller Communications Process (G1.PN).

This process sends formatted messages to the TRIAX Message Logger Process (G2.PN) for possible logging.

3.2.25.5.3.1.3 **G5313.PN -Conveyor Restrict Movement Messages**

Process Name	Process ID #	Date
Conveyor Restrict Movement Messages	G5313.PN	January 5, 2001

Requirements ID #(s)

SECS-RC1, SECS-RC1.1, SECS-RC1.1.14, SECS-RC1.3, SECS-RC1.4, SECS-RC3, SECS-RC3.1, SECS-RC4, SECS-RC4.3, SECS-RC5, SECS-RC1.1.14, SECS-RI28

Process Narrative

This process sends and receives Conveyor Restrict Movement Messages to and from the TRIAX Message Buffering Process (G4.PN) to move loads from Receipt Induction. This process reads the Workstation (WKST) record for a specific workstation lane in order to determine the DSS Workstation Designator (G523.PN) mode of operation. The operator must be in a Stow mode to request this material movement.

The Conveyor Restrict Movement Messages are:

- Conveyor Lock Lane Request (05). This message is sent from the Conveyor PLC to the Host when the operator presses the manual control at an operator workstation lane to request a military pallet movement from the pallet induction area.
- Conveyor Lock Lane For Receipt Induction Pallet Confirm (12). This message is sent from the Host to the Conveyor PLC in response to the Triax Conveyor PLC to Host message type 05 to allow the movement of the military pallet from Receipt Induction to an Operator Workstation lane.
- Conveyor Lock Lane For Receipt Induction Pallet Deny (14). This message is sent from the Host to the Conveyor PLC in response to the Triax Conveyor PLC to Host message type 05 to disallow the movement of the military pallet from Receipt Induction to an Operator Workstation lane.

When the Conveyor PLC receives a Conveyor Lock Lane For Receipt Induction Pallet Confirm (12), the Conveyor PLC controls the movement of the military pallet from receipt induction to the requesting workstation lane. The Host marks the lane with a logical lock to prevent further movement to this lane until the military pallet arrives and the Conveyor PLC sends a Conveyor Storage Location Pallet Arrival at Operator Workstation (07). The location ID for the military pallet is an unknown slave pallet and will be sent as ‘0000000’.

When the Conveyor PLC receives a Conveyor Lock Lane For Receipt Induction Pallet Deny (14), it disallows the movement of the military pallet from receipt induction to the requesting workstation lane. An error message is displayed on the PLC Panel View screen. Additionally, the Host is capable of notifying the operator that he must be logged in as Stow mode to request material from receipt induction.

If invalid data was received, an error message is formatted and sent to the TRIAX Traffic Controller Communications Process (G1.PN).

This process sends formatted messages to the TRIAX Message Logger Process (G2.PN) for possible logging.

3.2.25.5.3.2 **G532.DFD**

Process ID #	Date
G532.DFD - Crane Tracking Messages	January 5, 2001

Requirement ID #(s)

SECS-RC1, SECS-RC1.1, SECS-RC1.1.14, SECS-RC1.3, SECS-RC1.4, SECS-RC3, SECS-RC3.1, SECS-RC4, SECS-RC4.3, SECS-RC5, SECS-RC1.1.14, SECS-RI28

Data Flow Diagram

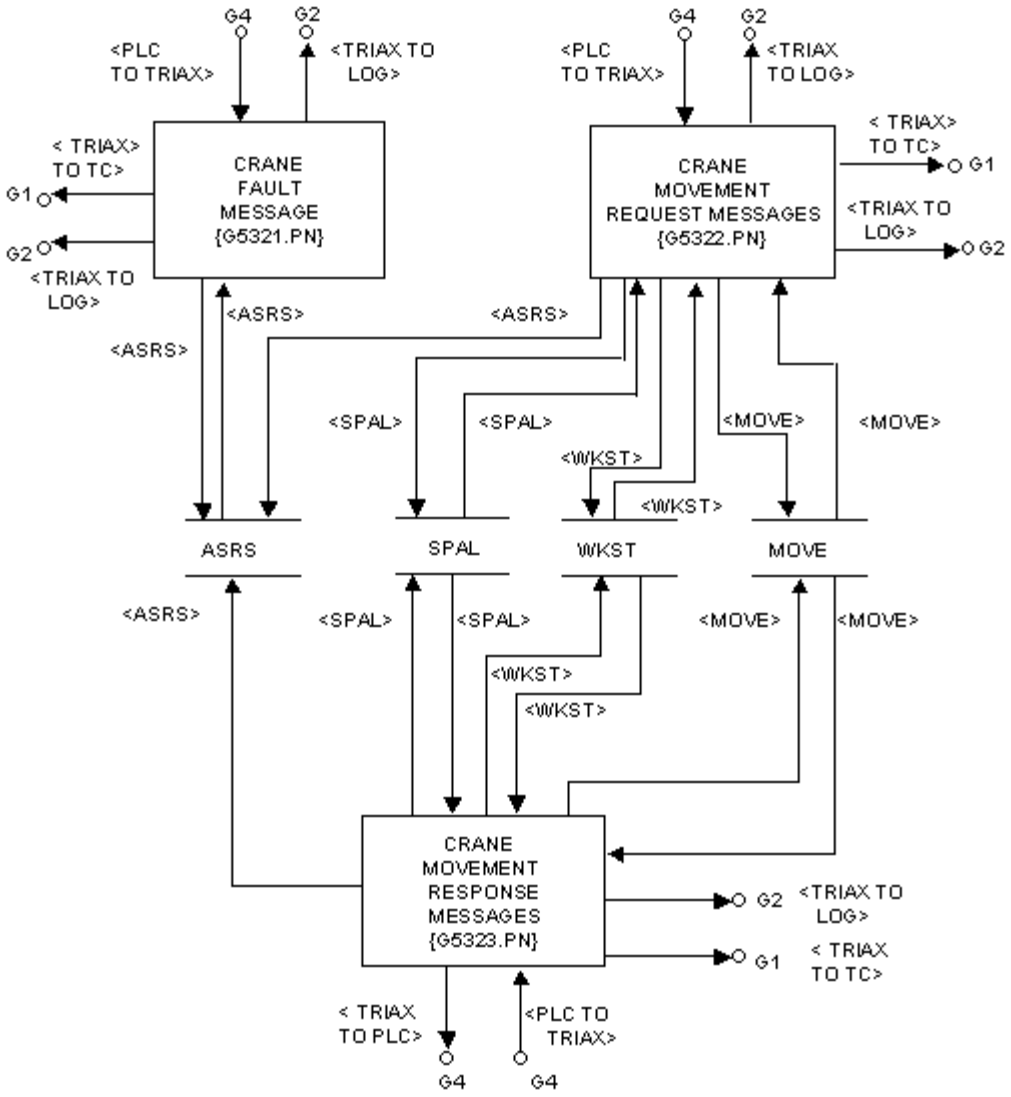

3.2.25.5.3.2.1 **G5321.PN - Crane Fault Message**

Process Name	Process ID #	Date
Crane Fault Message	G5321.PN	January 5, 2001

Requirements ID #(s)

SECS-RC1, SECS-RC1.1, SECS-RC1.1.14, SECS-RC1.3, SECS-RC1.4, SECS-RC3, SECS-RC3.1, SECS-RC4, SECS-RC4.3, SECS-RC5, SECS-RC1.1.14, SECS-RI28

Process Narrative

This process accepts Crane Fault Message from the TRIAX Message Buffering Process (G4.PN), and updates the AS/RS record (ASRS) status to inhibit or allow material movement.

A Crane Fault Message is a Crane PLC to Host message type 52 that is received in place of one of four Crane Movement Response Messages described in G5323.PN. This process evaluates the Status Code and determines whether the status is recoverable or fatal.

This process will be more fully described as further information is obtained from the Triax Crane contractors.

If the Crane Fault Message is considered to be fatal, this process also notifies the operator with a general message broadcast

If invalid data was received, an error message is formatted and sent to the TRIAX Traffic Controller Communications Process (G1.PN).

This process sends formatted messages to the TRIAX Message Logger Process (G2.PN) for logging.

3.2.25.5.3.2.2 **G5322.PN - Crane Movement Request Messages**

Process Name	Process ID #	Date
Crane Movement Request Messages Page 1 of 2	G5322.PN	January 5, 2001

Requirements ID #(s)

SECS-RC1, SECS-RC1.1, SECS-RC1.1.14, SECS-RC1.3, SECS-RC1.4, SECS-RC3, SECS-RC3.1, SECS-RC4, SECS-RC4.3, SECS-RC5, SECS-RC1.1.14, SECS-RI28

Process Narrative

This process accepts a Crane Movement Request Message from the TRIAX Message Buffering Process (G4.PN), updates the Crane Record (ASRS) accordingly and issues further Crane commands as appropriate. This process may also update the Slave Pallet (SPAL), Workstation (WKST), and Move Control Number (MOVE) Records.

The following messages are Pick Crane Movement Request Messages:

- Crane Pick Proceed to Storage Location Request (54). This message is sent from the Host to the Crane PLC to request crane movement to a storage location. It is the first step of an outbound from storage quarter movement.
- Crane Pick Proceed to Outbound Delivery Station Request (60). This message is sent when the Host has received a successful Triax Crane PLC to Host Crane Pick Proceed to Outbound Delivery Station Request (55) message and directs the movement of the storage location to the outbound delivery location.. This is the third quarter step of an outbound storage location movement

When the Crane is involved in a Pick operation, the sequence of message types is 54/55/60/61. Message Types 55 and 61 are described in Crane Movement Response Messages Process (G5323.PN).

Under a scenario of a successful Pick operation, a Host to Crane PLC Pick Crane Movement Request message results in a Crane PLC to Host Pick Crane Movement Response message (G5323.PN). If the Pick operation is not successful, the Crane will generate a Crane Fault Message (G5321.PN) and further action may take place.

The following messages are Stow Crane Movement Request Messages:

- Crane Stow Proceed to Inbound Pickup Location Request (58). This message is sent from the Host to the Crane PLC as the first step of an inbound to storage quarter movement.
- Crane Stow Proceed to Storage Location Request (56). This is message is sent when the Host has received a successful Crane Stow Proceed to Storage Location Status (59) and now requests the crane to move to storage location in the racks. It is the third step of an inbound to storage quarter movement.

Process Name	Process ID #	Date
Crane Movement Request Messages Page 2 of 2	G5322.PN	January 5, 2001

Requirements ID #(s)

SECS-RC1, SECS-RC1.1, SECS-RC1.1.14, SECS-RC1.3, SECS-RC1.4, SECS-RC3, SECS-RC3.1, SECS-RC4, SECS-RC4.3, SECS-RC5, SECS-RC1.1.14, SECS-RI28

Process Narrative

When the Crane is involved in a Stow operation, the sequence of message types 58/59/56/57. Message Types 59 and 57 are described in Crane Movement Response Messages Process (G5323.PN).

The following message is an Abort Crane Movement Request Message:

- Crane Abort Movement Request (70). This message is sent whenever the Host must abort any action from or to storage location GGGLL.

Under a scenario of a successful Stow operation, a Host to Crane PLC Stow Crane Movement Request message results in a Crane PLC to Host Stow Crane Movement Response message (G5323.PN). If the Stow operation is not successful, the Crane will generate a Crane Fault Message (G5321.PN) and further action may take place.

If invalid data was received, an error message is formatted and sent to the TRIAX Traffic Controller Communications Process (G1.PN).

This process sends formatted messages to the TRIAX Message Logger Process (G2.PN) for possible logging.

3.2.25.5.3.2.3 **G5323.PN - Crane Movement Response Messages**

Process Name	Process ID #	Date
Crane Movement Response Messages Page 1 of 2	G5323.PN	January 5, 2001

Requirements ID #(s)

SECS-RC1, SECS-RC1.1, SECS-RC1.1.14, SECS-RC1.3, SECS-RC1.4, SECS-RC3, SECS-RC3.1, SECS-RC4, SECS-RC4.3, SECS-RC5, SECS-RC1.1.14, SECS-RI28

Process Narrative

This process accepts a Crane Movement Response Message from the TRIAX Message Buffering Process (G4.PN), updates the Crane Record (ASRS) accordingly and issues further Crane commands as appropriate. This process may also update the Slave Pallet (SPAL), Workstation (WKST), and Move Control Number (MOVE) Records.

The following messages are Pick Crane Movement Response Messages:

- Crane Pick Proceed to Storage Location Response (55). This message is sent as a response to the Host to Triax Crane PLC message #54 to acknowledge that the Host has requested a storage location and the crane has retrieved the storage location from the racks. This is the second step of an outbound from storage movement.
- Crane Pick Proceed to Outbound Delivery Station Response (61). This message is sent as a response to the Host to Triax Crane PLC message #60 to acknowledge that the Crane has successfully placed a storage location on the outbound Delivery Station. This is the last step in an outbound storage location movement.

When the Crane is involved in a Pick operation, the sequence of message types is 54/55/60/61. Message Types 54 and 60 are described in Crane Movement Request Messages Process (G5322.PN).

Under a scenario of a successful Pick operation, a Host to Crane PLC Pick Crane Movement Response message (G5322.PN) results in a Crane PLC to Host Pick Crane Movement Request message indicating a continued operation or no further message indicating a completed operation. If the Pick operation is not successful, the Crane will generate a Crane Fault Message (G5321.PN) and further action may take place.

The following messages are Stow Crane Movement Response Messages:

- Crane Stow Proceed to Inbound Pickup Location Response (59). This message is sent as the second step to notify Host that the storage location has been picked up at the inbound pickup station and the crane is ready to proceed to the storage location in the racks.
- Crane Stow Proceed to Storage Location Response (57). This message is sent as a response to the Host to Triax Crane PLC message #56 to acknowledge that the Host has requested a crane pallet to stow a storage location. It is the last step of an inbound storage location movement.

Process Name	Process ID #	Date
Crane Movement Response Messages Page 2 of 2	G5323.PN	January 5, 2001

Requirements ID #(s)

SECS-RC1, SECS-RC1.1, SECS-RC1.1.14, SECS-RC1.3, SECS-RC1.4, SECS-RC3, SECS-RC3.1, SECS-RC4, SECS-RC4.3, SECS-RC5, SECS-RC1.1.14, SECS-RI28

Process Narrative

When the Crane is involved in a Stow operation, the sequence of message types 58/59/56/57. Message Types 58 and 56 are described in Crane Movement Request Messages Process (G5322.PN).

Under a scenario of a successful Stow operation, a Host to Crane PLC Stow Crane Movement Response (G5322.PN) message results in a Crane PLC to Host Stow Crane Movement Request message indicating a continuing operation or no further message indicating a completed operation. If the Stow operation is not successful, the Crane will generate a Crane Fault Message (G5321.PN) and further action may take place.

If invalid data was received, an error message is formatted and sent to the TRIAX Traffic Controller Communications Process (G1.PN).

3.2.25.5.3.3 G533.PN - Crane Status Messages

Process Name	Process ID #	Date
Crane Status Messages	G533.PN	January 5, 2001

Requirements ID #(s)

SECS-RC1, SECS-RC1.1, SECS-RC1.1.14, SECS-RC1.3, SECS-RC1.4, SECS-RC3, SECS-RC3.1, SECS-RC4, SECS-RC4.3, SECS-RC5, SECS-RC1.1.14, SECS-RI28

Process Narrative

This process accepts a Crane Status Messages from the TRIAX Message Buffering Process (G4.PN), updates the Crane Record (ASRS) accordingly and issues further Crane commands as appropriate.

The Crane Status Messages are:

- Crane Status Request (52). This message is the most common sent from the Host to the Crane PLC. It is sent first upon startup of the Host. It is constantly sent at a predetermined timeout period for each of the cranes when there is not an active movement activity occurring (that is, there is no Pick (58/59/56/57) sequence or Stow (54/55/60/61) sequence active). It is also sent prior to a Host to Triax Crane PLC message type 54 as well as a Host to Triax Crane PLC message type 58. Further, it is sent when ECS sends the Triax a movement message and has waited up to twice the maximum time it takes for a normal response. Basically, ECS has determined that the Triax is not going to respond to ECS.
- Crane Status Response (51). This message is the most common sent from the Crane PLC to the Host. This message is sent as a response to the Host message #52 sent first upon startup of the Host and constantly at a predetermined timeout period for each of the cranes. This message is also sent from the Crane PLC to the Host whenever there is an error condition in an active Stow or Pick sequence (G5321.PN)

If invalid data was received, an error message is formatted and sent to the TRIAX Traffic Controller Communications Process (G1.PN).

This process sends formatted messages to the TRIAX Message Logger Process (G2.PN) for possible logging.

3.2.26 **V.DFD**

Process ID #	Date
V.DFD - Norfolk Virginia DPI Tote Conveyor Subcontroller	March 4, 2002

Requirement ID #(s)

SECS-RC1, SECS-RC1.1.13, SECS-RC1.2, SECS-RC1.3, SECS-RC1.4, SECS-RC3, SECS-RC3.1, SECS-RC3.2, SECS-RC3.3, SECS-RC4, SECS-RC4.2, SECS-RC4.3, SECS-RI1, SECS-RI5, SECS-RI27

Data Flow Diagram

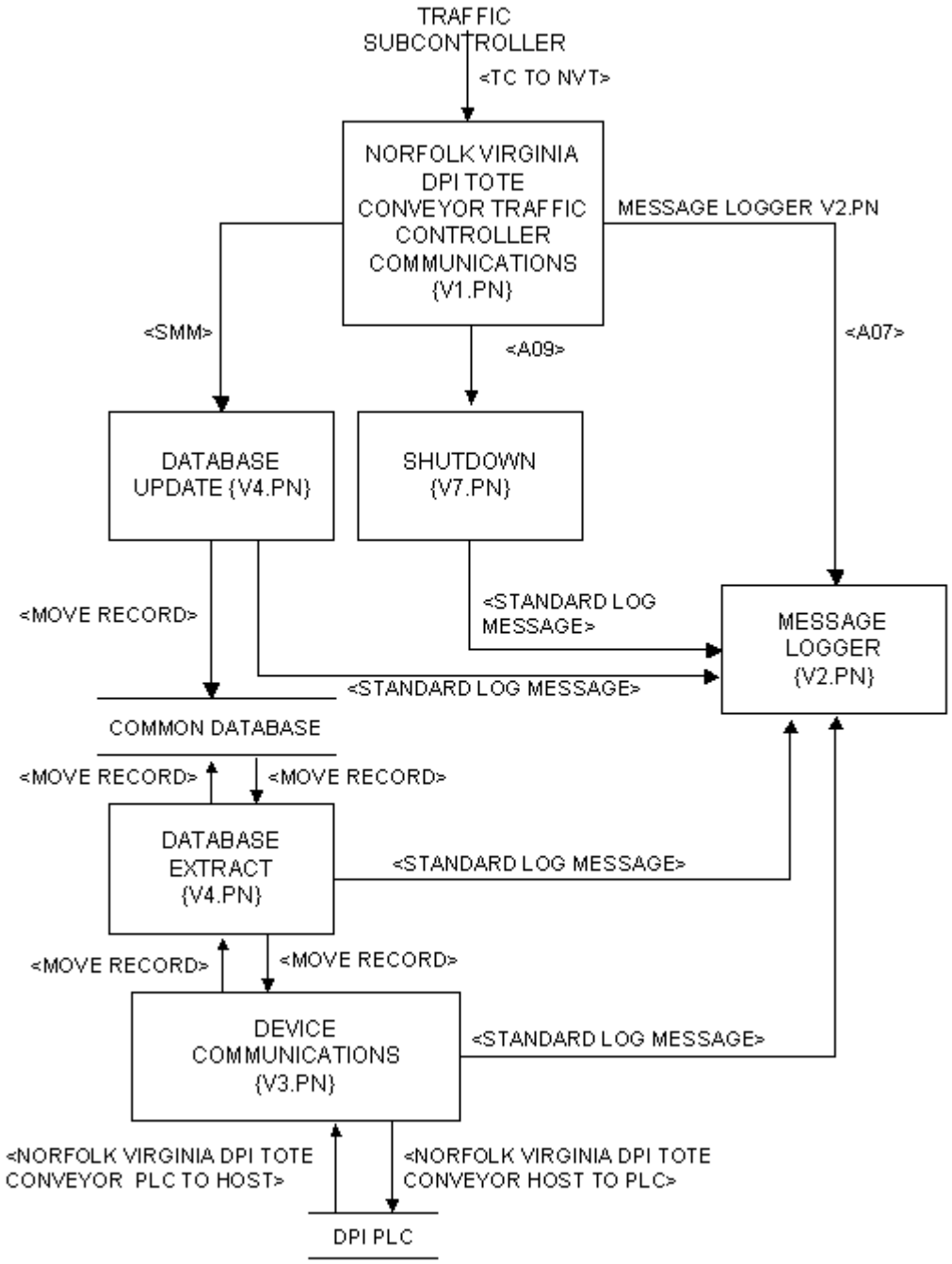

3.2.26.1 V1.PN - Norfolk Virginia DPI Tote Conveyor Traffic Controller Communications

Process Name	Process ID #	Date
Norfolk Virginia DPI Tote Conveyor Traffic Controller Communications	V1.PN	March 4, 2002

Requirements ID #(s)

SECS-RC1, SECS-RC1.1.13, SECS-RC1.2, SECS-RC1.3, SECS-RC1.4, SECS-RC5, SECS-RI1, SECS-RC3, SECS-RC3.2, SECS-RC3.3, SECS-RI27

Process Narrative

This process receives messages from the Traffic Controller (T.DFD). The messages are evaluated and passed to Set Logging (V6.PN), Shutdown (V7.PN) or Update Common Database (V4.PN) processes. This process calls Message Logger (V2.PN) to log messages received from the Traffic Controller.

3.2.26.2 V2.PN - Norfolk Virginia DPI Tote Conveyor Message Logger

Process Name	Process ID #	Date
Norfolk Virginia DPI Tote Conveyor Message Logger	V2.PN	March 4, 2002
Requirements ID #(s)		
SECS-RC4, SECS-RC4.3		
Process Narrative		
This process receives messages from all Norfolk Virginia DPI Tote Conveyor processes and adds the messages to a log file. The file is closed and a new file is created at the start of the workday.		

3.2.26.3 V3.PN - Norfolk Virginia DPI Tote Conveyor Device Communications

Process Name	Process ID #	Date
Norfolk Virginia DPI Tote Conveyor Device Communications	V3.PN	March 4, 2002

Requirements ID #(s)

SECS-RI5, SECS-RC3, SECS-RC3.1, SECS-RC1, SECS-RC1.1.13, SECS-RC1.2, SECS-RC1.3, SECS-RC1.4, SECS-RC5, SECS-RI27

Process Narrative

This process receives messages containing tote Ids or Package Control Numbers from the DPI PLC. This process calls Database Extract (V5.PN) to retrieve divert information from the MOVE record in the common database. This process sends the divert information to the DPI PLC. Messages received from the DPI PLC and sent to the DPI PLC are passed to Message Logger (V2.PN).

3.2.26.4 V4.PN - Norfolk Virginia DPI Tote Conveyor Database Update

Process Name	Process ID #	Date
Norfolk Virginia DPI Tote Conveyor Database Update	V4.PN	March 4, 2002

Requirements ID #(s)
SECS-RC3, SECS-RC3.1, SECS-RC4, SECS-RC4.2

Process Narrative

This process will receive messages from the Traffic Communication (V1.PN) process and use the destination, control number and conveyance information to update (V4.PN) the MOVE records in the common database.

3.2.26.5 V5.PN - Norfolk Virginia DPI Tote Conveyor Database Extract

Process Name	Process ID #	Date
Norfolk Virginia DPI Tote Conveyor Database Extract	V5.PN	March 4, 2002

Requirements ID #(s)

SECS-RI5, SECS-RC3, SECS-RC3.1, SECS-RC1, SECS-RC1.1.13, SECS-RC1.2, SECS-RC1.3, SECS-RC1.4, SECS-RC5, SECS-RI27

Process Narrative

This process receives messages from the Device Communication (V3.PN) process. It retrieves divert information form the MOVE record of the common database and returns the divert information to the Device Communication (V3.PN) process.

3.2.26.6 V6.PN - Norfolk Virginia DPI Tote Conveyor Set Logging

Process Name	Process ID #	Date
Norfolk Virginia DPI Tote Conveyor Set Logging	V6.PN	March 4, 2002

Requirements ID #(s)

SECS-RI5, SECS-RC3, SECS-RC3.1, SECS-RC1, SECS-RC1.1.13, SECS-RC1.2, SECS-RC1.3, SECS-RC1.4, SECS-RC5, SECS-RI27

Process Narrative

This process receives messages from the Traffic Controller Communications (V1.PN) process. It passes instructions to the Message Logger (V2.PN) process that tell the Message Logger (V2.PN) process whether or not to add records to the log file.

3.2.26.7 V7.PN - Norfolk Virginia DPI Tote Conveyor Shutdown

Process Name	Process ID #	Date
Norfolk Virginia DPI Tote Conveyor Shutdown	V7.PN	March 4, 2002

Requirements ID #(s)

SECS-RI5, SECS-RC3, SECS-RC3.1, SECS-RC1, SECS-RC1.1.13, SECS-RC1.2, SECS-RC1.3, SECS-RC1.4, SECS-RC5, SECS-RI27

Process Narrative

This process receives messages from the Traffic Controller Communications process (V1.PN). It posts a DESTROY instruction to Windows to close the program.

3.2.27 **D.DFD**

Process ID #	Date
D.DFD - Tote/Package Conveyor Subcontroller	March 4, 2002

Requirement ID #(s)

SECS-RC1.1, SECS-RC1.1.11, SECS-RC1.2, SECS-RC1.3, SECS-RC1.4, SECS-RC2.11, SECS-RC3.1, SECS-RC4.2, SECS-RC4.3, SECS-RC5, SECS-RC1.1.15

Data Flow Diagram

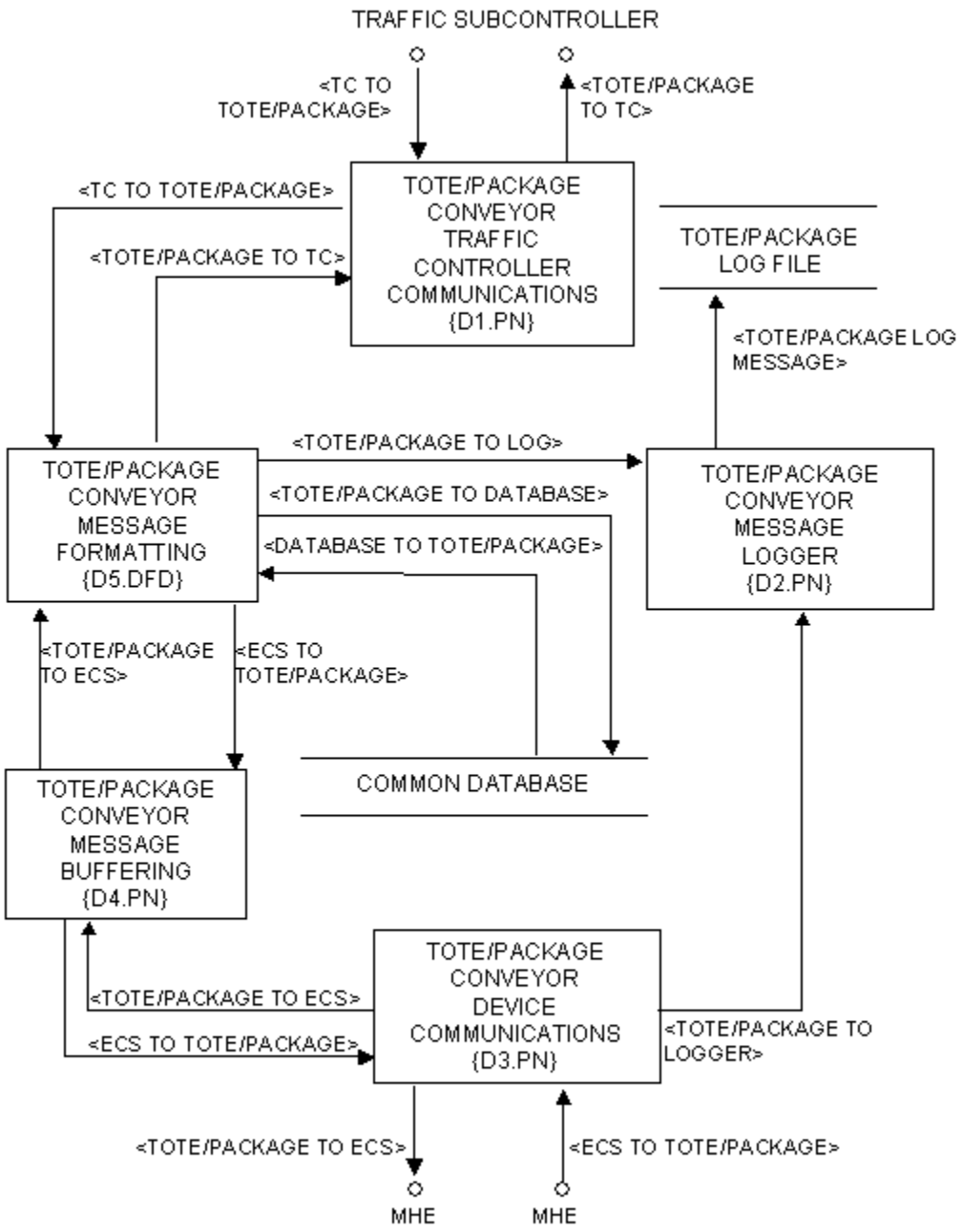

3.2.27.1 D1.PN - Tote/Package Conveyor Traffic Controller Communications

Process Name	Process ID #	Date
Tote/Package Conveyor Traffic Controller Communications	D1.PN	March 4, 2002

Requirement ID #(s)

SECS-RC1.1, SECS-RC1.1.11, SECS-RC1.2, SECS-RC1.3, SECS-RC1.4, SECS-RC2.11, SECS-RC3.1, SECS-RC1.1.15

Process Narrative

This process receives messages from the Traffic Controller (T.DFD) and passes them onto the Tote/Package Conveyor Message Formatting (D5.DFD) process. This process also receives response and status messages from the Tote/Package Conveyor Message Formatting (D5.DFD) process and sends them to the Traffic Controller (T.DFD). This process handles all message transfer protocols and handshaking between the Traffic Controller (T.DFD) and the subcontroller (D.DFD) as well as the message transmission.

3.2.27.2 D2.PN - Tote/Package Conveyor Message Logger

Process Name	Process ID #	Date
Tote/Package Conveyor Message Logger	D2.PN	March 4, 2002

Requirement ID #(s)

SECS-RC1.1, SECS-RC1.1.11, SECS-RC4.2, SECS-RC4.3, SECS-RC1.1.15

Process Narrative

This process receives messages from the Tote/Package Conveyor Message Formatting (D5.DFD) process and the Tote/Package Conveyor Device Communications (T3.PN) process. If logging is enabled, this process will log all user messages to a log file. This process also logs all error messages, regardless of whether or not logging is enabled.

3.2.27.3 D3.PN - Tote/Package Conveyor Device Communications

Process Name	Process ID #	Date
Tote/Package Conveyor Device Communications	D3.PN	March 4, 2002

Requirement ID #(s)

SECS-RC1.1, SECS-RC1.1.11, SECS-RC1.2, SECS-RC1.3, SECS-RC1.4, SECS-RC5, SECS-RC1.1.15

Process Narrative

This process receives messages from the Tote/Package Conveyor Message Buffering (D4.PN) process and transmits them to the Tote/Package Conveyor Controller (D.DFD). This process receives acknowledgments and status responses from the Tote/Package Conveyor (PLC) and forwards them to the Tote/Package Conveyor Message Buffering (D4.PN) process for further processing. This process sends device messages to the Tote/Package Conveyor Message Logger (D2.PN) process for logging. This process handles all transfer protocols and handshaking required by the device communications.

3.2.27.4 D4.PN - Tote/Package Conveyor Message Buffering

Process Name	Process ID #	Date
Tote/Package Conveyor Message Buffering	D4.PN	March 4, 2002

Requirement ID #(s)

SECS-RC1.1, SECS-RC1.1.11, SECS-RC4.2, SECS-RC4.3, SECS-RC1.1.15

Process Narrative

This process will receive messages from the Tote/Package Conveyor Message Formatting (D5.DFD) process and the Tote/Package Conveyor Device Communications (D3.PN) process and insert and extract the messages to and from their respective memory buffers.

3.2.27.5 **D5.DFD**

Process ID #	Date
D5.DFD - Tote/Package Conveyor Message Formatting	March 4, 2002

Requirement ID #(s)

SECS-RC1.1, SECS-RC1.1.11, SECS-RC1.2, SECS-RC1.3, SECS-RC1.4, SECS-RC2.3, SECS-RC2.5, SECS-RC2.6, SECS-RC2.11, SECS-RC3.1, SECS-RC4.2, SECS-RC4.3, SECS-RC5, SECS-RC1.1.15

Data Flow Diagram

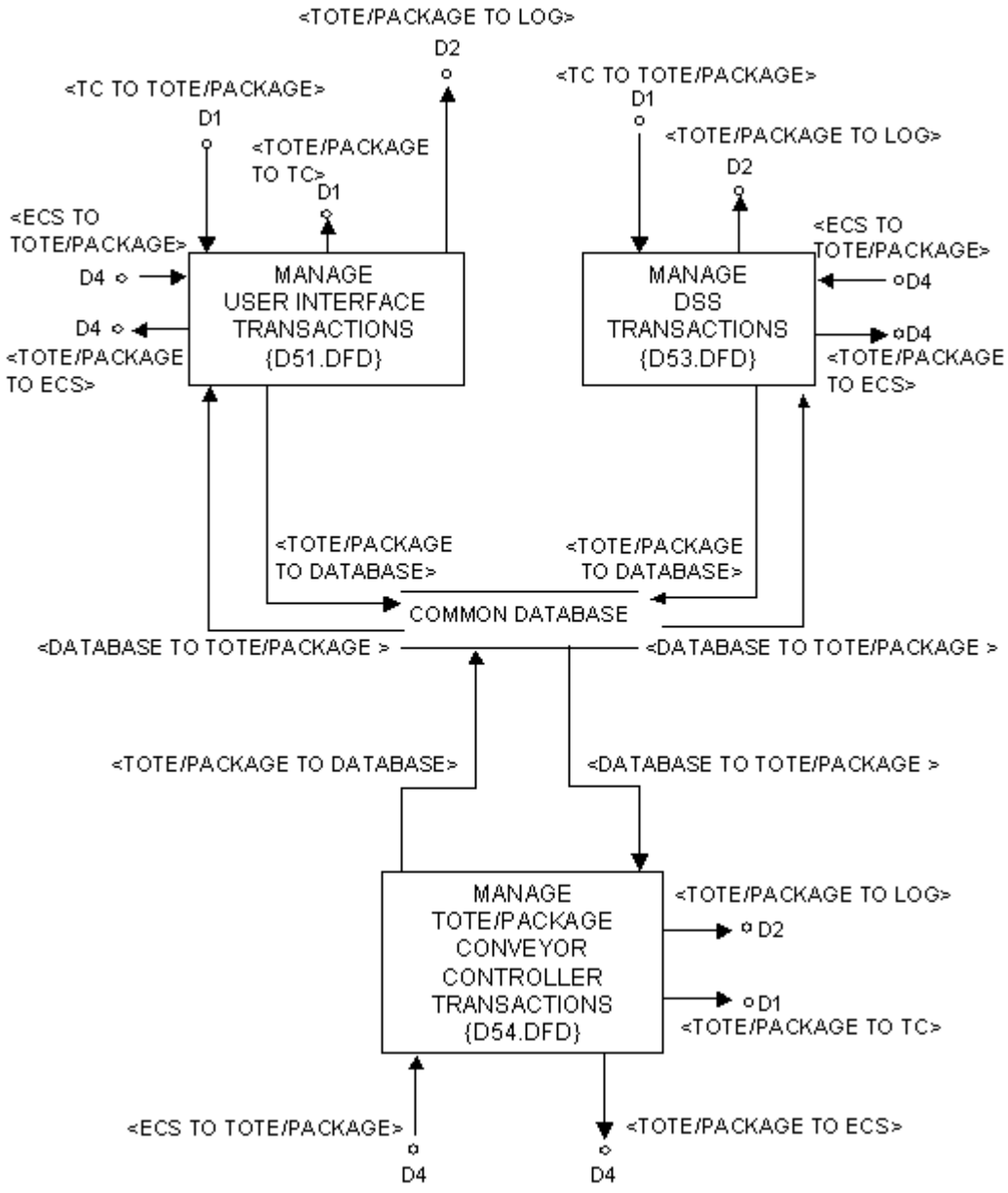

3.2.27.5.1 **D51.DFD**

Process ID #	Date
D51.DFD - Manage User Interface Transactions	March 4, 2002

Requirement ID #(s)

SECS-RC1.1, SECS-RC1.1.11, SECS-RC1.2, SECS-RC1.3, SECS-RC1.4, SECS-RC2.5, SECS-RC2.6, SECS-RC3.1, SECS-RC4.2, SECS-RC4.3, SECS-RC5, SECS-RC1.1.15

Data Flow Diagram

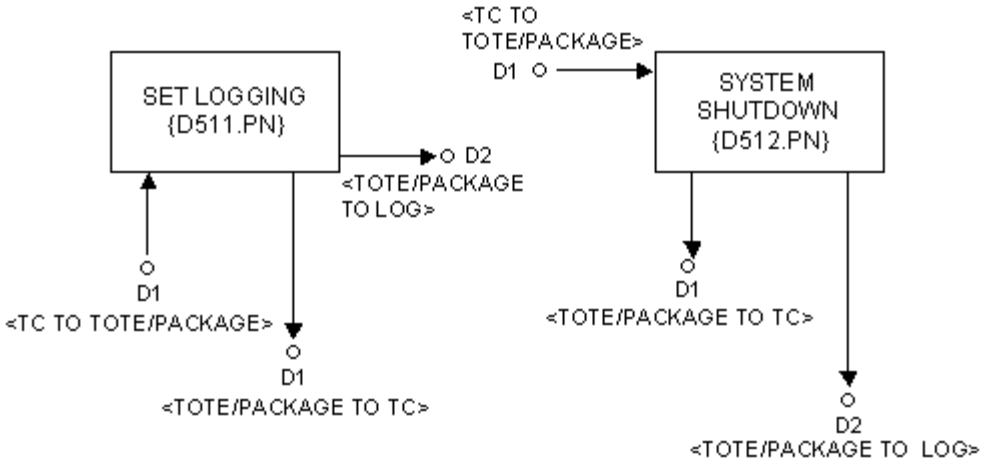

3.2.27.5.1.1 **D511.PN - Set Logging**

Process Name	Process ID #	Date
Set Logging	D511.PN	March 4, 2002

Requirement ID #(s)

SECS-RC1.1, SECS-RC1.1.11, SECS-RC2.5, SECS-RC4.3, SECS-RC1.1.15

Process Narrative

This process accepts a User Interface request (A07) from the Tote/Package Conveyor Traffic Controller Communications (D1.PN) process to turn logging either on or off. If invalid data was received, an error message is formatted and sent to the Tote/Package Conveyor Traffic Controller Communications (D1.PN) process. This process sends formatted messages to the Tote/Package Conveyor Message Logger (D2.PN) process for possible logging.

3.2.27.5.1.2 **D512.PN - System Shutdown (Software)**

Process Name	Process ID #	Date
System Shutdown (Software)	D512.PN	March 4, 2002

Requirement ID #(s)
SECS-RC1.1, SECS-RC1.1.11, SECS-RC2.6, SECS-RC1.1.15

Process Narrative

This process accepts a User Interface request (A09) from the Tote/Package Conveyor Traffic Controller Communications (D1.PN) process to set a flag to shutdown the Tote/Package Conveyor Subcontroller. If invalid data was received, an error message is formatted and sent to the Tote/Package Conveyor Traffic Controller Communications (D1.PN) process. This process sends formatted messages to the Tote/Package Conveyor Message Logger (D2.PN) process for possible logging.

3.2.27.5.2 **D53.DFD**

Process ID #	Date
D53.DFD - Manage DSS Transactions	March 4, 2002

Requirement ID #(s)
SECS-RC1.1, SECS-RC1.1.11, SECS-RC1.2, SECS-RC1.3, SECS-RC1.4

Data Flow Diagram

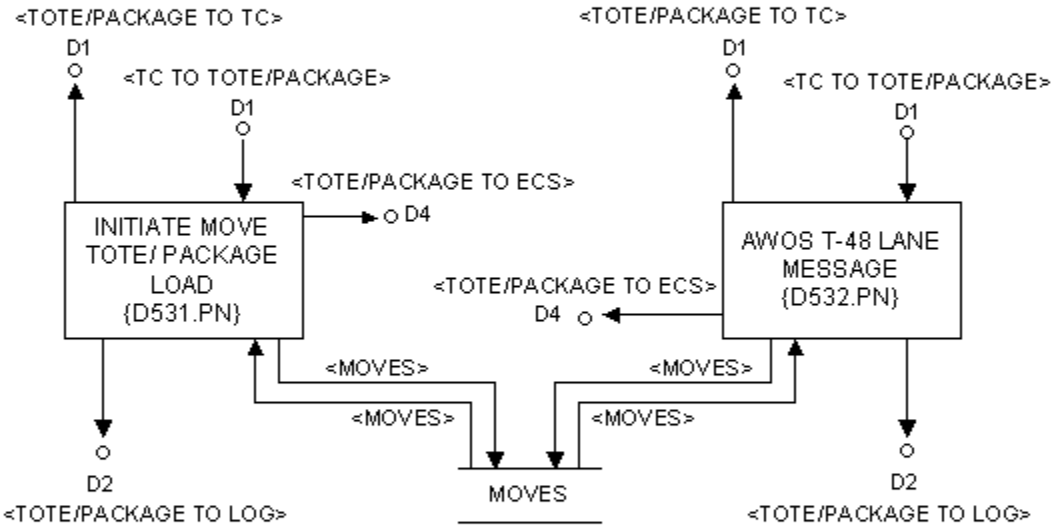

3.2.27.5.2.1 **D531.PN - Initiate Move Tote/Package Load**

Process Name	Process ID #	Date
Initiate Move Tote/Package Load	D531.PN	March 4, 2002

Requirement ID #(s)

SECS-RC1.1, SECS-RC1.1.11, SECS-RC1.2, SECS-RC1.3, SECS-RC1.4, SECS-RC2.11, SECS-RC12.4, SECS-RC1.1.15, SECS-RI25.0

Process Narrative

Requests coming to this process can come from either the Upper Tier (SMM) or User Interface (M01) through the Tote/Package Conveyor Traffic Controller Communications (D1.PN) process. The Tote/Package conveyor destination is obtained and the move is stored in the Moves database to be initiated through a New Tote/Package Move message (D541/D541a/D541b) when the scanner receives the tote/package. This process will also send formatted messages to the Tote/Package Conveyor Message Logger (D2.PN) process for possible logging.

3.2.27.5.2.2 **D532.PN - AWOS T48 Lane Message**

Process Name	Process ID #	Date
AWOS T48 Lane Message	D532.PN	March 4, 2002

Requirement ID #(s)
SECS-RC1.1, SECS-RC1.1.11, SECS-RC1.2, SECS-RC2.6, SECS-RC1.1.15

Process Narrative

This process accepts an AWOS Subcontroller request (T48) from the Tote/Package Conveyor Traffic Controller Communications (D1.PN) process to either send package down correct lane or reject lane. This process (D532) will format a message and send it to the Tote/Package Conveyor Message Buffering (D4.PN) process to be forwarded to the Tote/Package Conveyor. The message will be updated and a lane destination message will be formatted and sent to the Tote/Package Conveyor Traffic Controller Communications (D1.PN) process. This process sends formatted messages to the Tote/Package Conveyor Message Logger (D2.PN) process for possible logging and then to the Tote Package PLC.

3.2.27.5.3 **D54.DFD**

Process ID #	Date
D54.DFD - Manage Tote/Package Conveyor Transactions	March 4, 2002

Requirement ID #(s)

SECS-RC1.1, SECS-RC1.1.11, SECS-RC1.2, SECS-RC1.3, SECS-RC1.4

Data Flow Diagram

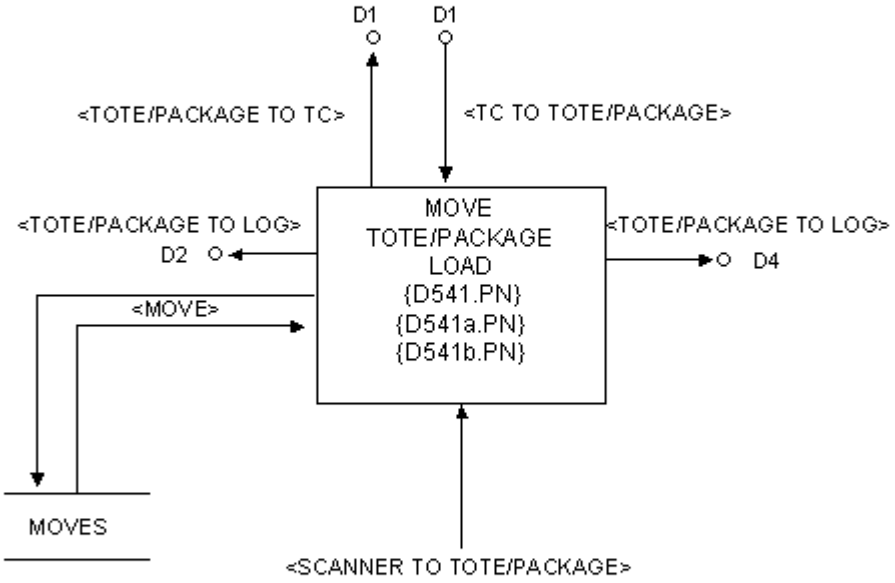

3.2.27.5.3.1 **D541.PN/D541a.PN - New Tote/Package Move**

Process Name	Process ID #	Date
New Tote/Package Move	D541/D541a/D541b.PN	March 4, 2002

Requirement ID #(s)
SECS-RC1.1, SECS-RC1.1.11, SECS-RC12.4

Process Narrative

This process receives a new Tote/Package Move (M01) message from the Tote/Package Conveyor Traffic Controller Communications (D1.PN) process. This message comes as a result of the scanner conversation New Tote/Package Move. The scanner sends the necessary information to retrieve a move, and has validated the information. However, if invalid information is received, an error message is formatted and sent to the Tote/Package Conveyor Traffic Controller Communications (D1.PN) process. The proper message is formatted and sent to the Tote/Package Conveyor Message /Buffering Process (D4.PN). This process sends formatted messages to the Tote/Package Conveyor Message Logger (D2.PN) process for possible logging. (D541a.PN is received from the shipping area and the 01 Move Message format will differ slightly.) The process will then retrieve the new move in the 'Moves' records, and a request is sent to the Tote/Package Scanner (D541.PN or D541a.PN - shipping or D541b.PN - storage) process to move the item.

3.2.28 **I.DFD**

Process ID #	Date
I.DFD - Y109 Controller	March 25, 2002

Requirement ID #(s)

SECS-RC1, SECS-RC1.1, SECS-RC1.1.18, SECS-RC1.3, SECS-RC1.4, SECS-RC3, SECS-RC3.1, SECS-RC4, SECS-RC4.3, SECS-RC5, SECS-RI28

Data Flow Diagram

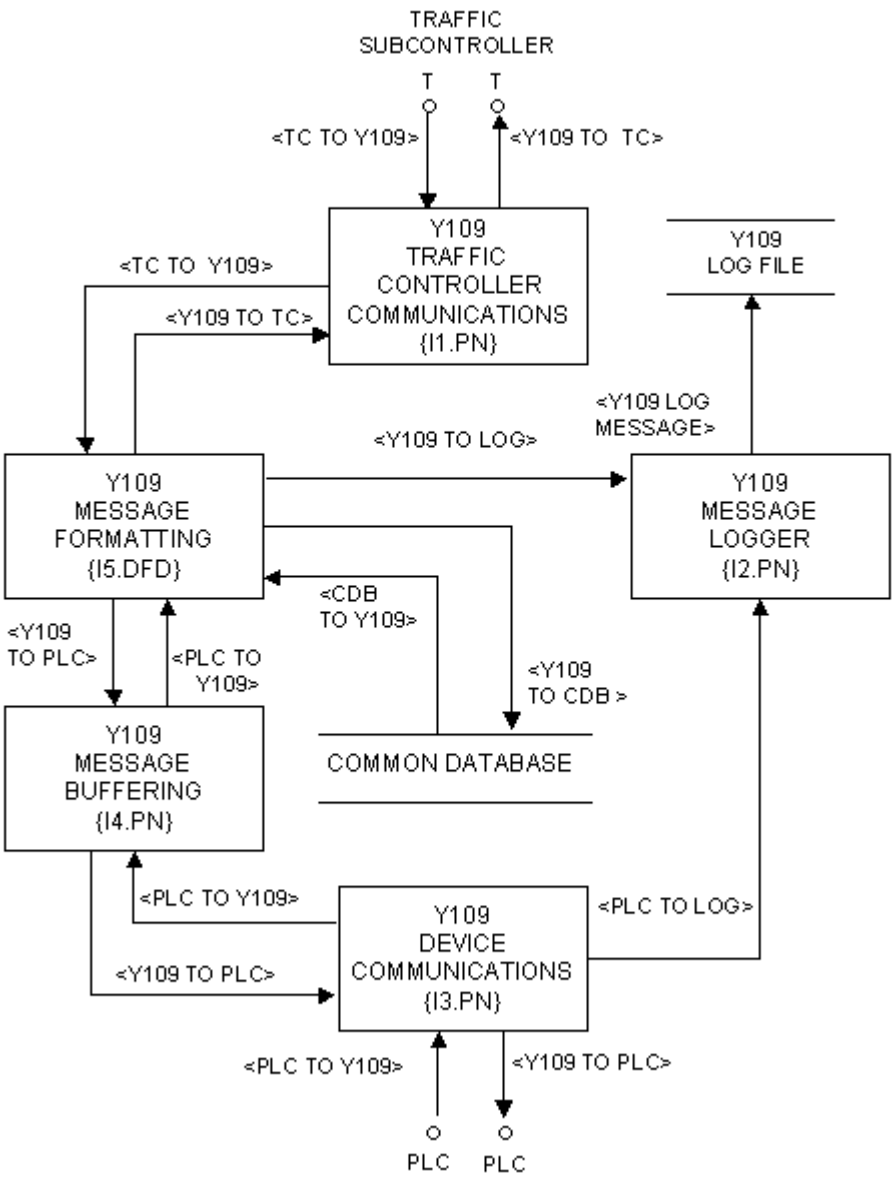

3.2.28.1 I1.PN - Y109 Traffic Controller Communications

Process Name	Process ID #	Date
Y109 Traffic Controller Communications	I1.PN	March 25, 2002

Requirements ID #(s)

SECS-RC1, SECS-RC1.1.16, SECS-RC1.2, SECS-RC1.3, SECS-RC1.4, SECS-RC5, SECS-RI1, SECS-RC3, SECS-RC3.2, SECS-RC3.3, SECS-RI28

Process Narrative

This process receives messages from the Traffic Controller (T.DFD) and passes them onto the Y109 Message Formatting Process. This process receives response and status messages from the Y109 Message Formatting Process and sends them to the Traffic Controller (T.DFD). This process handles all message transfer protocols and handshaking between the Traffic Controller (T.DFD) and the Y109 Subcontroller (I.DFD). This process handles message transmission from memory or hardware.

If invalid data was received, an error message is formatted and sent to the Y109 Traffic Controller Communications Process (I1.PN).

This process sends formatted messages to the Y109 Message Logger Process (I2.PN) for possible logging.

3.2.28.2 I2.PN - Y109 Message Logger

Process Name	Process ID #	Date
Y109 Message Logger	I2.PN	March 25, 2002

Requirements ID #(s)
SECS-RC4, SECS-RC4.3

Process Narrative

This process receives messages from the Y109 Message Formatting Process and the Y109 Device Communications Process and if logging is enabled logs the message to the Y109 Log File.

If invalid data was received, an error message is formatted and sent to the Y109 Traffic Controller Communications Process (I1.PN).

3.2.28.3 I3.PN - Y109 Device Communications

Process Name	Process ID #	Date
Y109 Device Communications	I3.PN	March 25, 2002

Requirements ID #(s)

SECS-RI8, SECS-RC3, SECS-RC3.1, SECS-RC1, SECS-RC1.1.16, SECS-RC1.2, SECS-RC1.3, SECS-RC1.4, SECS-RC5, SECS-RI28

Process Narrative

This process receives messages from the Y109 Message Buffering Process and transmits them to the Y109 Subcontroller. This process receives acknowledgements and status responses from the Y109 Subcontroller and forwards them to the Y109 Message Buffering Process for further processing. This process sends device messages to the Y109 Message Logger Process for logging. This process handles all transfer protocols and handshaking required by the device communications.

If invalid data was received, an error message is formatted and sent to the Y109 Traffic Controller Communications Process (I1.PN).

This process sends formatted messages to the Y109 Message Logger Process (I2.PN) for possible logging.

3.2.28.4 I4.PN - Y109 Message Buffering

Process Name	Process ID #	Date
Y109 Message Buffering	I4.PN	March 25, 2002

Requirements ID #(s)
SECS-RC3, SECS-RC3.1, SECS-RC4, SECS-RC4.2, SECS-RI28

Process Narrative

This process will receive messages from the Y109 Message Formatting Process and the Y109 Device Communications Process and insert and extract the messages to and from their respective memory buffers.

If invalid data was received, an error message is formatted and sent to the Y109 Traffic Controller Communications Process (I1.PN).

3.2.28.5 **I5.DFD**

Process ID #	Date
I5.DFD - Y109 Message Formatting	March 25, 2002

Requirement ID #(s)

SECS-RC1, SECS-RC1.1, SECS-RC1.1.18, SECS-RC1.3, SECS-RC1.4, SECS-RC3, SECS-RC3.1, SECS-RC4, SECS-RC4.3, SECS-RC5, SECS-RI28

Data Flow Diagram

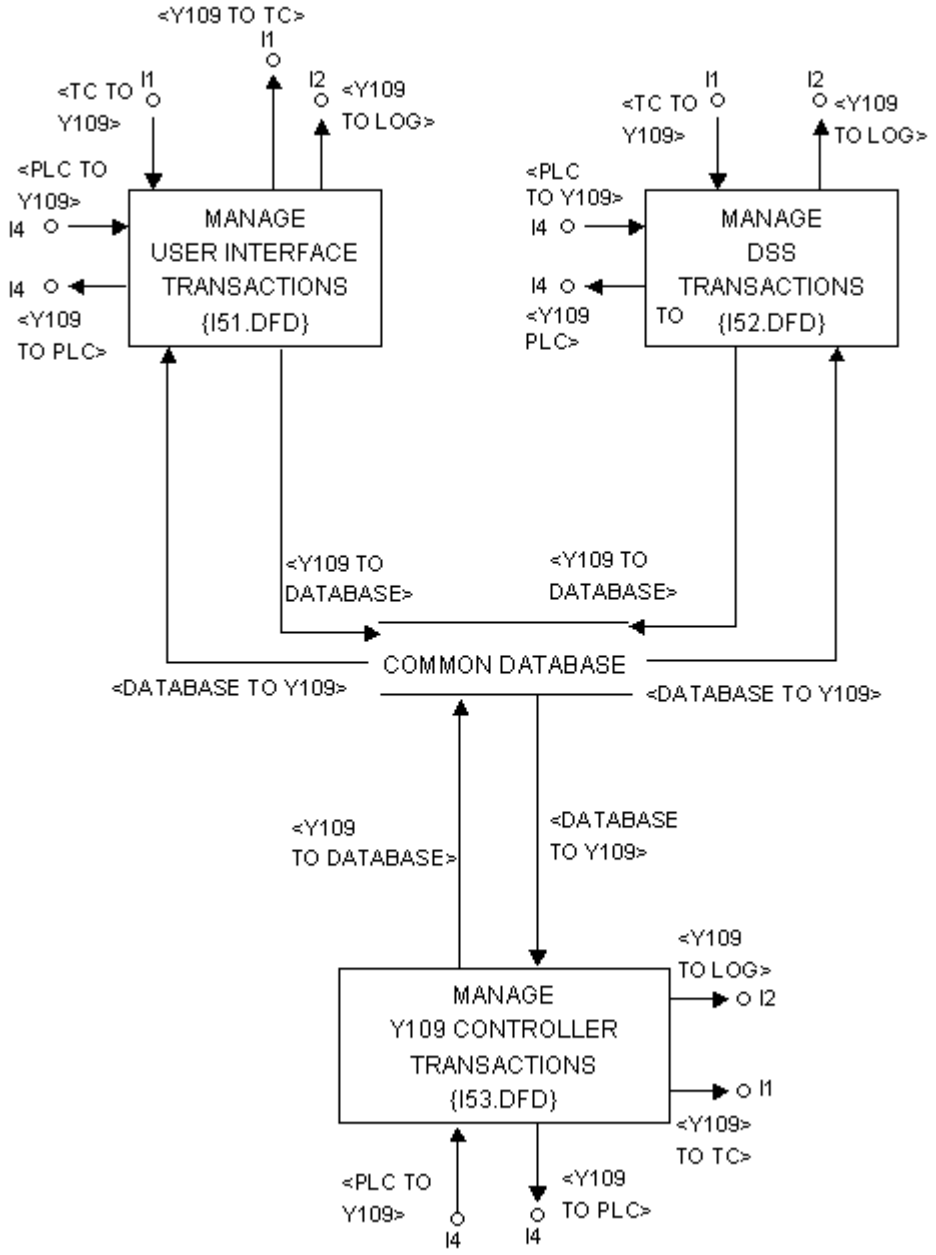

3.2.28.5.1 I51.DFD - Manage User Interface Transactions

Process ID #	Date
I51.DFD - Manage User Interface Transactions	March 25, 2002

Requirement ID #(s)

SECS-RC1, SECS-RC1.1, SECS-RC1.1.19, SECS-RC1.3, SECS-RC1.4, SECS-RC3, SECS-RC3.1, SECS-RC4, SECS-RC4.3, SECS-RC5, SECS-RI28

Data Flow Diagram

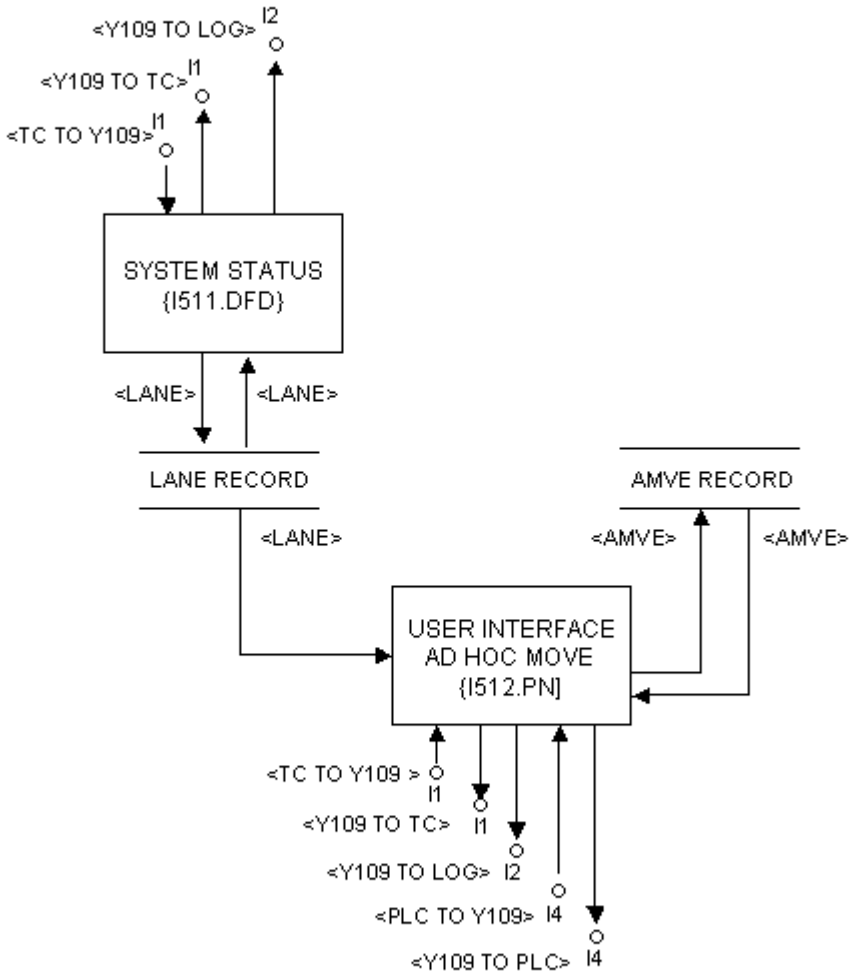

3.2.28.5.1.1 **I511.DFD**

Process ID #	Date
I511.DFD - System Status	March 25, 2002

Requirement ID #(s)

SECS-RC1, SECS-RC1.1, SECS-RC1.1.18, SECS-RC1.3, SECS-RC1.4, SECS-RC3, SECS-RC3.1, SECS-RC4, SECS-RC4.3, SECS-RC5, SECS-RI28

Data Flow Diagram

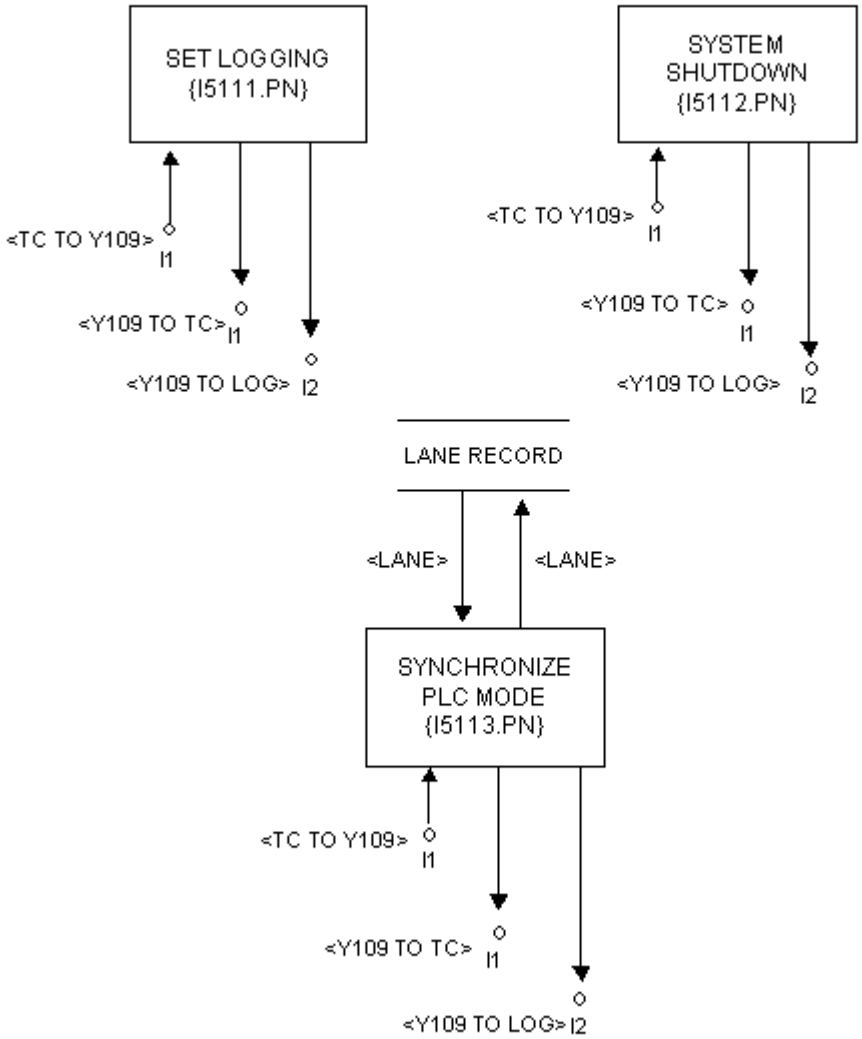

3.2.28.5.1.1.1 **I5111.PN - Set Logging**

Process Name	Process ID #	Date
Set Logging	I5111.PN	March 25, 2002

Requirements ID #(s)
SECS-RC1.1.18, SECS-RC3, SECS-RC3.1, SECS-RC4, SECS-RC4.3, SECS-RC5

Process Narrative

This process accepts a User Interface request from the Y109 Traffic Controller Communications Process (I1.PN) to turn the UserLog.Post Process either on or off. Either UserLog.TurnOn or UserLog.TurnOff is called depending on the input parameter. At Y109, there is no database activity for this process.

If invalid data was received, an error message is formatted and sent to the Y109 Traffic Controller Communications Process (I1.PN).

This process sends formatted messages to the Y109 Message Logger Process (I2.PN) for possible logging.

3.2.28.5.1.1.2 **I5112.PN - System Shutdown**

Process Name	Process ID #	Date
System Shutdown	I5112.PN	March 25, 2002

Requirements ID #(s)

SECS-RC1.1.18, SECS-RC3, SECS-RC3.1, SECS-RC4, SECS-RC4.3, SECS-RC5

Process Narrative

This process accepts a User Interface request from the Y109 Traffic Controller Communications Process (I1.PN) to set a flag to shut down the Unit Controller, including the Link objects it uses. At Y109, there is no database activity for this process.

If invalid data was received, an error message is formatted and sent to the Y109 Traffic Controller Communications Process (I1.PN).

This process sends formatted messages to the Y109 Message Logger Process (I2.PN) for possible logging.

3.2.28.5.1.1.3 **I5113.PN - Synchronize PLC Mode**

Process Name	Process ID #	Date
Synchronize PLC Mode	I5113.PN	March 25, 2002

Requirements ID #(s)
SECS-RC1.1.18, SECS-RC3, SECS-RC3.1, SECS-RC4, SECS-RC4.3, SECS-RC5

Process Narrative

This process responds to the User Interface request from the Y109 Traffic Controller Communications Process (I1.PN) to read the PLC Mode (LANE) table of the database. The result is sent back to the requesting User Interface to display the current PLC Mode (‘Automatic’ or ‘Manual’) for both the pallet conveyor and case sortation systems.

If the operator would like to confirm the current PLC Mode, this process responds to the User Interface request from the Y109 Traffic Controller Communications Process (I1.PN) to send the PLC Mode Request Message described in PLC Mode Messages (I533.PN). When the PLC sends the PLC Mode Response Message described in PLC Modes Messages (I533.PN), this process will update the PLC Mode (LANE) record. It will also format and send a message back to the requesting User Interface with the mode response of the PLC.

If invalid data was received, an error message is formatted and sent to the Y109 Traffic Controller Communications Process (I1.PN).

This process sends formatted messages to the Y109 Message Logger Process (I2.PN) for possible logging.

3.2.28.5.1.2 **I512.PN - User Interface Ad Hoc Move**

Process Name	Process ID #	Date
User Interface Ad Hoc Move	I512.PN	March 25, 2002

Requirements ID #(s)

SECS-RC1, SECS-RC1.1, SECS-RC1.1.18, SECS-RC1.3, SECS-RC1.4, SECS-RC3, SECS-RC3.1, SECS-RC4, SECS-RC4.3, SECS-RC5, SECS-RI28

Process Narrative

This process processes Ad Hoc Moves from the User Interface. If valid data is received, this message is processed as a DSS Movement Request (I521.PN).

If invalid data is received, an error message is formatted and sent to the Y109 Traffic Controller Communications Process (I1.PN).

This process sends formatted messages to the Y109 Message Logger Process (I2.PN) for possible logging.

3.2.28.5.2 **I52.DFD**

Process ID #	Date
I52.DFD - Manage DSS Transactions	March 25, 2002

Requirement ID #(s)

SECS-RC1, SECS-RC1.1, SECS-RC1.1.18, SECS-RC1.3, SECS-RC1.4, SECS-RC3, SECS-RC3.1, SECS-RC4, SECS-RC4.3, SECS-RC5, SECS-RI28

Data Flow Diagram

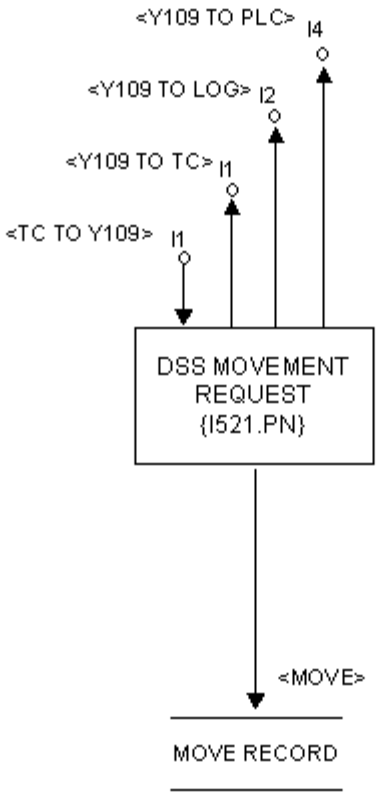

3.2.28.5.2.1 **I521.PN - DSS Movement Request**

Process Name	Process ID #	Date
DSS Movement Request	I521.PN	March 25, 2002

Requirements ID #(s)

SECS-RC1, SECS-RC1.1, SECS-RC1.1.18, SECS-RC1.3, SECS-RC1.4, SECS-RC3, SECS-RC3.1, SECS-RC4, SECS-RC4.3, SECS-RC5, SECS-RI28

Process Narrative

This process accepts a "D" flag Standard Movement Message (SMM) from the Y109 Traffic Controller Communications module (I1.PN), to move either a pallet load from Transporter Truck Induction or LCAV Consolidation to a specified rack storage location or a case or tote filled with cases from Transporter Truck Induction to the Case Sortation System.

First, if a Move Record (AMVE) does not exists, one record is generated. For pallets, DSS will send the destination information in the SMM Destination field. For cases, DSS will send the information in the SMM Alternate Destination field.

If a Move ID record already exists, then the AMVE will be updated with the information contained in the most recent SMM.

If invalid data was received, an error message is formatted and sent to the Y109 Traffic Controller Communications Process (I1.PN).

This process sends formatted messages to the Y109 Message Logger Process (I2.PN) for possible logging.

3.2.28.5.3 **I53.DFD**

Process ID #	Date
I53.DFD - Manage Y109 Controller Transactions	March 25, 2002

Requirement ID #(s)

SECS-RC1, SECS-RC1.1, SECS-RC1.1.18, SECS-RC1.3, SECS-RC1.4, SECS-RC3, SECS-RC3.1, SECS-RC4, SECS-RC4.3, SECS-RC5, SECS-RI28

Data Flow Diagram

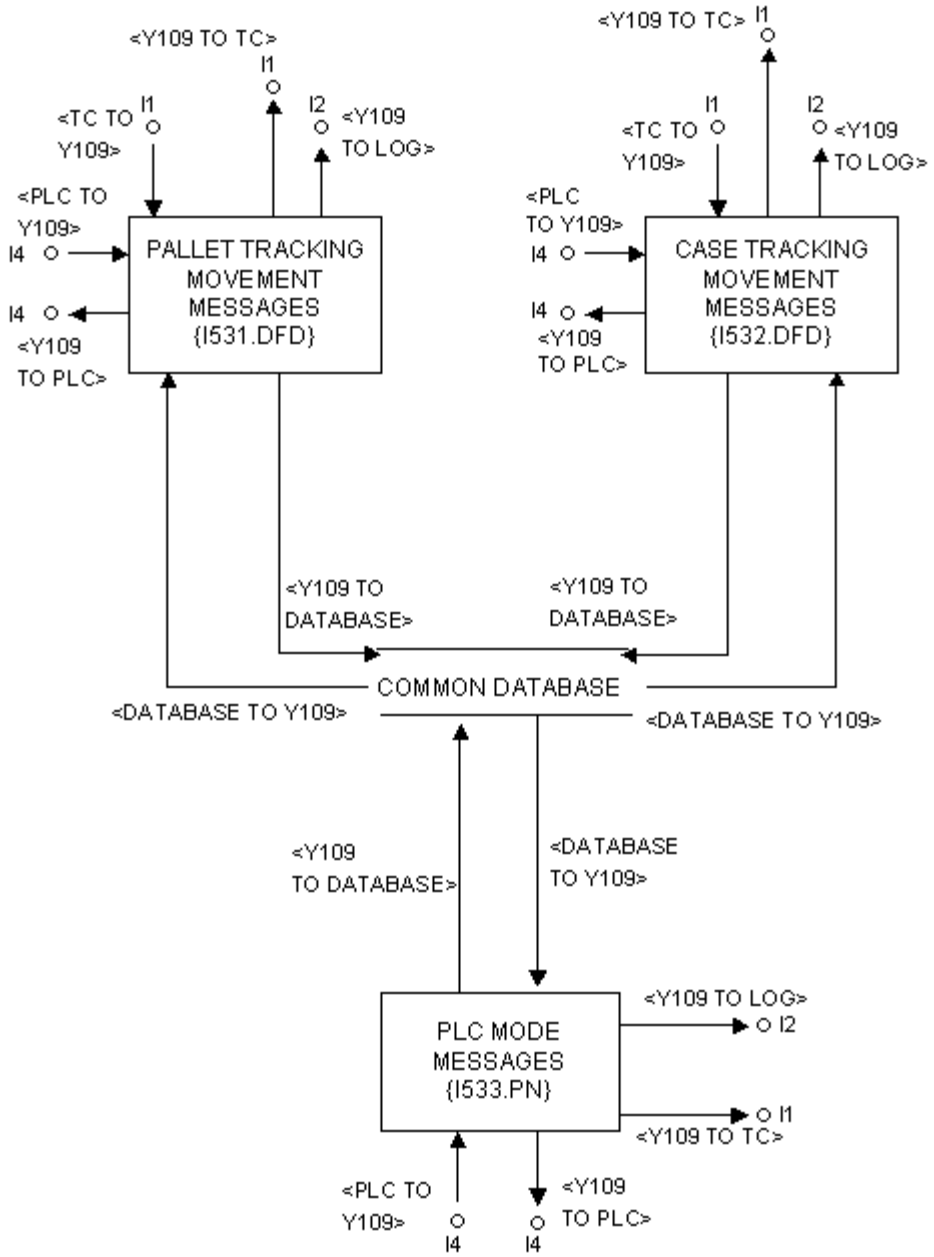

3.2.28.5.3.1 **I531.DFD - Pallet Tracking Movement Messages**

Process ID #	Date
I531.DFD - Pallet Tracking Movement Messages	March 25, 2002

Requirement ID #(s)

SECS-RC1, SECS-RC1.1, SECS-RC1.1.18, SECS-RC1.3, SECS-RC1.4, SECS-RC3, SECS-RC3.1, SECS-RC4, SECS-RC4.3, SECS-RC5, SECS-RI28

Data Flow Diagram

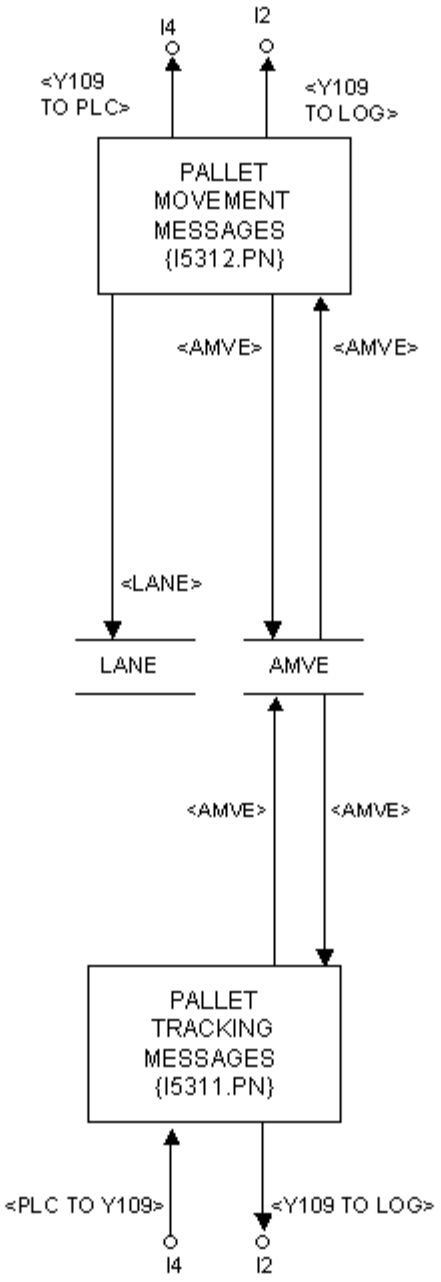

3.2.28.5.3.1.1 **I5311.PN - Pallet Tracking Messages**

Process Name	Process ID #	Date
Pallet Tracking Messages	I5311.PN	March 25, 2002

Requirements ID #(s)

SECS-RC1, SECS-RC1.1, SECS-RC1.1.18, SECS-RC1.3, SECS-RC1.4, SECS-RC3, SECS-RC3.1, SECS-RC4, SECS-RC4.3, SECS-RC5, SECS-RI28

Process Narrative

This process accepts a Pallet Tracking Message from the Y109 Message Buffering Process (I4.PN) upon arrival of the pallet at the barcode scanner located on the pallet conveyor from Transporter Truck Induction. The Move (AMVE) record for the control number sent in the message is updated.

The Pallet Tracking Message is:

- Pallet Rack Storage Scan Message (01): This message is sent from the Conveyor PLC to Host when the PLC barcode scanner detects a barcode at the pallet barcode scanner. The only barcode scanner on the pallet conveyor system is located on the pallet conveyor from Transporter Truck Induction to Rack Storage Sorter.

  This message contains the following fields:
  - Message Type
  - Scanner ID
  - Control Number of the material on the pallet
  - Transaction ID, generated by the PLC

A Pallet Rack Storage Scan Message (01) triggers a Pallet Sortation Move Request (02) as described in Pallet Movement Messages (I5312.PN).

If invalid data was received, an error message is formatted and sent to the Y109 Traffic Controller Communications Process (I1.PN).

This process sends formatted messages to the Y109 Message Logger Process (I2.PN) for possible logging.

3.2.28.5.3.1.2 **I5312.PN - Pallet Movement Messages**

Process Name	Process ID #	Date
Pallet Movement Messages	I5312.PN	March 25, 2002

Requirements ID #(s)

SECS-RC1, SECS-RC1.1, SECS-RC1.1.18, SECS-RC1.3, SECS-RC1.4, SECS-RC3, SECS-RC3.1, SECS-RC4, SECS-RC4.3, SECS-RC5, SECS-RI28

Process Narrative

This process generates a Pallet Movement Message as a result of the receipt of a Pallet Rack Storage Scan Message (01), described in Pallet Tracking Messages (I5311.PN). This message is passed to the Y109 Message Buffering Process (I4.PN). The PLC Mode (LANE) record is read and the Move (AMVE) record is updated.

The Pallet Movement Message is:

- Pallet Sortation Move Request Message (02): This message is sent from the Host to Conveyor PLC to direct the pallet to either a specific Rack Storage Lane or to the Rack Storage Reject Lane. This message contains the following fields:
  - Message Type
  - Scanner ID
  - Control Number
  - Transaction ID
  - Destination

The PLC Mode (LANE) record is read to determine if the Pallet PLC is in Automatic or Manual mode. If the Pallet PLC is in manual mode, the process logs a message that no further action will be taken and exits. On the other hand, if the Pallet PLC is in automatic mode, the process reads the Move (AMVE) record. If the Move record exists and has a valid destination, the process translates the DSS destination to the appropriate rack lane. If the Move record exists but has an invalid destination, the process directs the pallet to the reject lane. If the Move record does not exist in the database, a Move record is created with a destination of the pallet reject lane.

Whenever the Pallet PLC sends a Pallet Rack Storage Scan Message (01), the process updates the corresponding Move record with a scanned status.

The Pallet PLC will send a special barcode, '???????' to signal whenever a pallet is detected, but the barcode could not be read. This special Move record will have a fixed destination of the pallet reject lane in the appropriate field of the record. The Pallet Sortation Move Request Message will be formatted with the special barcode, the unique transaction ID sent by the PLC and the destination of the pallet reject lane.

If invalid data was received, an error message is formatted and sent to the Y109 Traffic Controller Communications Process (I1.PN).

This process sends formatted messages to the Y109 Message Logger Process (I2.PN) for possible logging.

3.2.28.5.3.2 **I532.DFD**

Process ID #	Date
I532.DFD - Case Tracking Movement Messages	March 25, 2002

Requirement ID #(s)

SECS-RC1, SECS-RC1.1, SECS-RC1.1.18, SECS-RC1.3, SECS-RC1.4, SECS-RC3, SECS-RC3.1, SECS-RC4, SECS-RC4.3, SECS-RC5, SECS-RI28

Data Flow Diagram

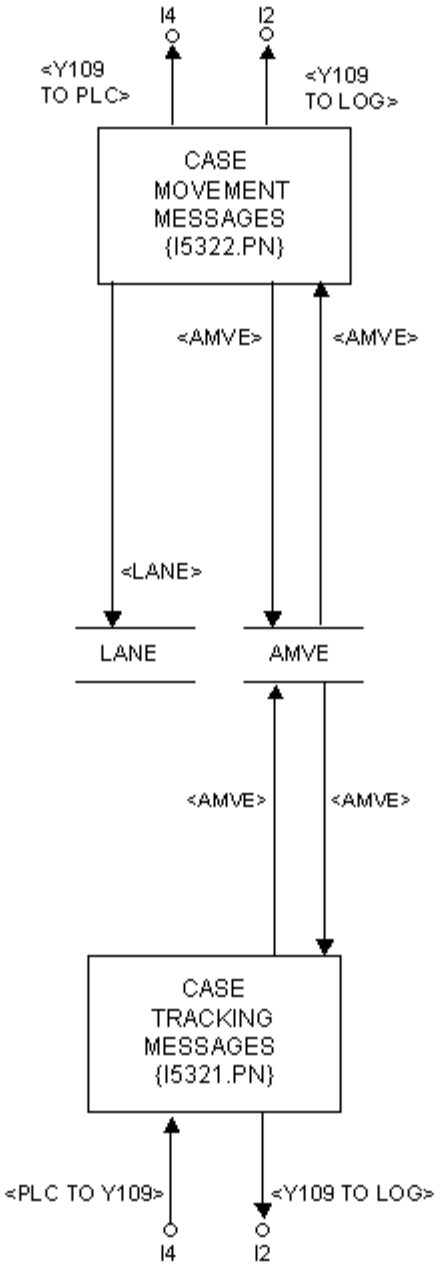

3.2.28.5.3.2.1 **I5321.PN - Case Tracking Messages**

Process Name	Process ID #	Date
Case Tracking Messages	I5321.PN	March 25, 2002

Requirements ID #(s)

SECS-RC1, SECS-RC1.1, SECS-RC1.1.18, SECS-RC1.3, SECS-RC1.4, SECS-RC3, SECS-RC3.1, SECS-RC4, SECS-RC4.3, SECS-RC5, SECS-RI28

Process Narrative

This process accepts a Case Tracking Message from the Y109 Message Buffering Process (I4.PN) upon arrival of the case at the barcode scanner located on the case conveyor from Transporter Truck Induction. The Move (AMVE) record control number sent in the message is updated.

The Case Tracking Message is:

- Case Sortation Scan Message (03): This message is sent from the Sorter PLC to Host when the PLC barcode scanner detects a barcode at the case barcode scanner. The only barcode scanner on the case conveyor system is located on the case conveyor from Transporter Truck Induction to Case Sortation Induction.

  This message contains the following fields:
  - Message Type
  - Scanner ID
  - Control Number of the material on the case
  - Transaction ID, generated by the PLC

A Case Sortation Scan Message (03) triggers a Case Sortation Move Request (04) as described in Case Movement Messages (I5322.PN).

If invalid data was received, an error message is formatted and sent to the Y109 Traffic Controller Communications Process (I1.PN).

This process sends formatted messages to the Y109 Message Logger Process (I2.PN) for possible logging.

3.2.28.5.3.2.2 **I5322.PN - Case Movement Messages**

Process Name	Process ID #	Date
Case Movement Messages	I5322.PN	March 25, 2002

Requirements ID #(s)

SECS-RC1, SECS-RC1.1, SECS-RC1.1.18, SECS-RC1.3, SECS-RC1.4, SECS-RC3, SECS-RC3.1, SECS-RC4, SECS-RC4.3, SECS-RC5, SECS-RI28

Process Narrative

This process generates a Case Movement Message as a result of the receipt of a Case Sortation Scan Message (03), described in Case Tracking Messages (I5321.PN). This message is passed to the Y109 Message Buffering Process (I4.PN). The PLC Mode (LANE) record is read and the Move (AMVE) record is updated.

The Case Movement Message is:

- Case Sortation Move Request Message (04): This message is sent from the Host to Sortation PLC to direct the case to either a specific Case Sorter chute or to the Case Sorter Reject Lane. This message contains the following fields:
  - Message Type
  - Scanner ID
  - Control Number
  - Transaction ID
  - Destination

The PLC Mode (LANE) record is read to determine if the Case PLC is in Automatic or Manual mode. If the Case PLC is in manual mode, the process logs a message that no further action will be taken and exits. On the other hand, if the Case PLC is in automatic mode, the process reads the Move (AMVE) record. If the Move record exists and has a valid destination, the process translates the DSS destination to the appropriate sorter chute. If the Move record exists but has an invalid destination, the process directs the Case to the reject chute. If the Move record does not exist in the database, a Move record is created with a destination of the Case Sorter Reject Chute.

Whenever the Case PLC sends a Case Sortation Scan Message (03), the process updates the corresponding Move record with a scanned status.

The Case PLC will send a special barcode, '???????' to signal whenever a case is detected, but the barcode could not be read. This special Move record will have a fixed destination of the Case Sorter Reject Chute in the appropriate field of the record. The Case Sortation Move Request Message will be formatted with the special barcode, the unique transaction ID sent by the PLC and the destination of the Case Sorter Reject Lane.

If invalid data was received, an error message is formatted and sent to the Y109 Traffic Controller Communications Process (I1.PN).

This process sends formatted messages to the Y109 Message Logger Process (I2.PN) for logging.

3.2.28.5.3.3 I533.PN - PLC Mode Messages

Process Name	Process ID #	Date
PLC Mode Messages	I533.PN	March 25, 2002

Requirements ID #(s)

SECS-RC1, SECS-RC1.1, SECS-RC1.1.18, SECS-RC1.3, SECS-RC1.4, SECS-RC3, SECS-RC3.1, SECS-RC4, SECS-RC4.3, SECS-RC5, SECS-RI28

Process Narrative

This process accepts PLC Mode Response messages from the Y109 Message Buffering Process (I4.PN) and updates the PLC Mode (LANE) record accordingly. It also generates a PLC Mode Request message as described in Synchronize PLC Mode (I513.PN) when a request is received from the User Interface.

The PLC Mode Messages are:

- PLC Mode Request (06): This message sent from the Host to either the Case or the Pallet PLC to determine the PLC Mode of the PLC as a result of an User Interface conversation.
- PLC Mode Response (09): This message is sent from either the Case or the Case PLC to report the current PLC Mode. When the PLC reports Automatic mode, the PLC is operating under normal conditions and expects that the Host will direct Cases/cases to their final destinations. Manual mode indicates that operator has elected to run the conveyors under maintenance mode and the operator must input the destinations at the manual controls located at the scanners.

The PLC Mode Response message will trigger an update of the appropriate PLC Mode (LANE) record.

If invalid data was received, an error message is formatted and sent to the Y109 Traffic Controller Communications Process (I1.PN).

This process sends formatted messages to the Y109 Message Logger Process (I2.PN) for possible logging.

3.2.29 **O.DFD**

Process ID #	Date
O.DFD - PS Tote Conveyor Subcontroller	May 29, 2002

Requirement ID #(s)

SECS-RC1.1, SECS-RC1.1.19, SECS-RC1.2, SECS-RC1.3, SECS-RC1.4, SECS-RC2.11, SECS-RC3.1, SECS-RC4.2, SECS-RC4.3, SECS-RC5

Data Flow Diagram

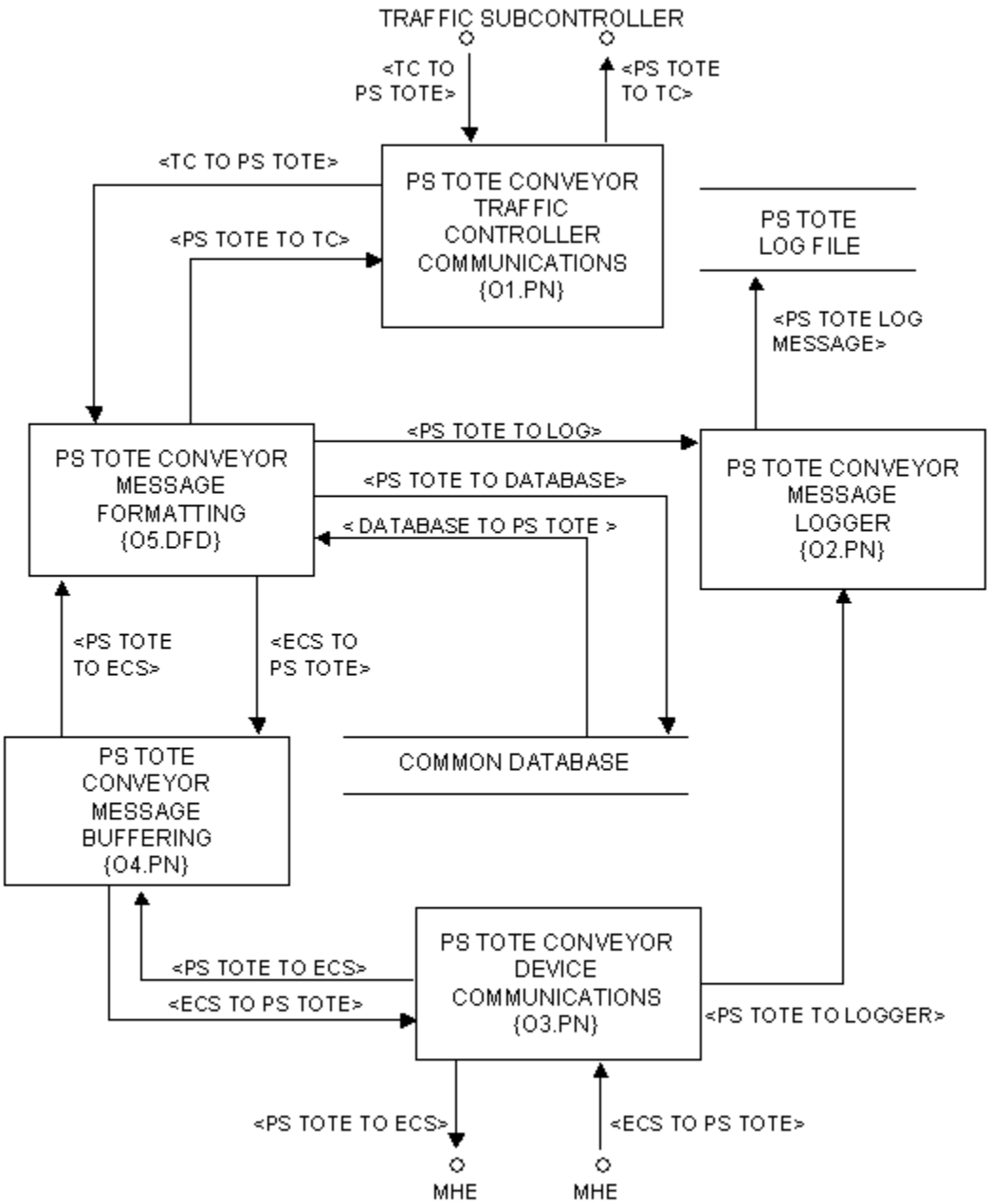

3.2.29.1 O1.PN - PS Tote Conveyor Traffic Controller Communications

Process Name	Process ID #	Date
PS Tote Conveyor Traffic Controller Communications	O1.PN	May 29, 2002

Requirement ID #(s)

SECS-RC1.1, SECS-RC1.1.19, SECS-RC1.2, SECS-RC1.3, SECS-RC1.4, SECS-RC2.11, SECS-RC3.1

Process Narrative

This process receives messages from the Traffic Controller (T.DFD) and passes them onto the PS Tote Conveyor Message Formatting (O5.DFD) process. This process also receives response and status messages from the PS Tote Conveyor Message Formatting (O5.DFD) process and sends them to the Traffic Controller (T.DFD). This process handles all message transfer protocols and handshaking between the Traffic Controller (T.DFD) and the subcontroller (D.DFD) as well as the message transmission.

3.2.29.2 O2.PN - PS Tote Conveyor Message Logger

Process Name	Process ID #	Date
PS Tote Conveyor Message Logger	O2.PN	May 29, 2002

Requirement ID #(s)
SECS-RC1.1, SECS-RC1.1.19, SECS-RC4.2, SECS-RC4.3

Process Narrative

This process receives messages from the PS Tote Conveyor Message Formatting (O5.DFD) process and the PS Tote Conveyor Device Communications (T3.PN) process. If logging is enabled, this process will log all user messages to a log file. This process also logs all error messages, regardless of whether or not logging is enabled.

3.2.29.3 O3.PN - PS Tote Conveyor Device Communications

Process Name	Process ID #	Date
PS Tote Conveyor Device Communications	O3.PN	May 29, 2002

Requirement ID #(s)

SECS-RC1.1, SECS-RC1.1.19, SECS-RC1.2, SECS-RC1.3, SECS-RC1.4, SECS-RC5

Process Narrative

This process receives messages from the PS Tote Conveyor Message Buffering (O4.PN) process and transmits them to the PS Tote Conveyor Controller (O.DFD). This process receives acknowledgments and status responses from the PS Tote Conveyor (PLC) and forwards them to the PS Tote Conveyor Message Buffering (O4.PN) process for further processing. This process sends device messages to the PS Tote Conveyor Message Logger (O2.PN) process for logging. This process handles all transfer protocols and handshaking required by the device communications.

3.2.29.4 O4.PN - PS Tote Conveyor Message Buffering

Process Name	Process ID #	Date
PS Tote Conveyor Message Buffering	O4.PN	May 29, 2002

Requirement ID #(s)
SECS-RC1.1, SECS-RC1.1.19, SECS-RC4.2, SECS-RC4.3

Process Narrative

This process will receive messages from the PS Tote Conveyor Message Formatting (O5.DFD) process and the PS Tote Conveyor Device Communications (O3.PN) process and insert and extract the messages to and from their respective memory buffers.

3.2.29.5 **O5.DFD**

Process ID #	Date
O5.DFD - PS Tote Conveyor Message Formatting	May 29, 2002

Requirement ID #(s)

SECS-RC1.1, SECS-RC1.1.19, SECS-RC1.2, SECS-RC1.3, SECS-RC1.4, SECS-RC2.3, SECS-RC2.5, SECS-RC2.6, SECS-RC2.11, SECS-RC3.1, SECS-RC4.2, SECS-RC4.3, SECS-RC5

Data Flow Diagram

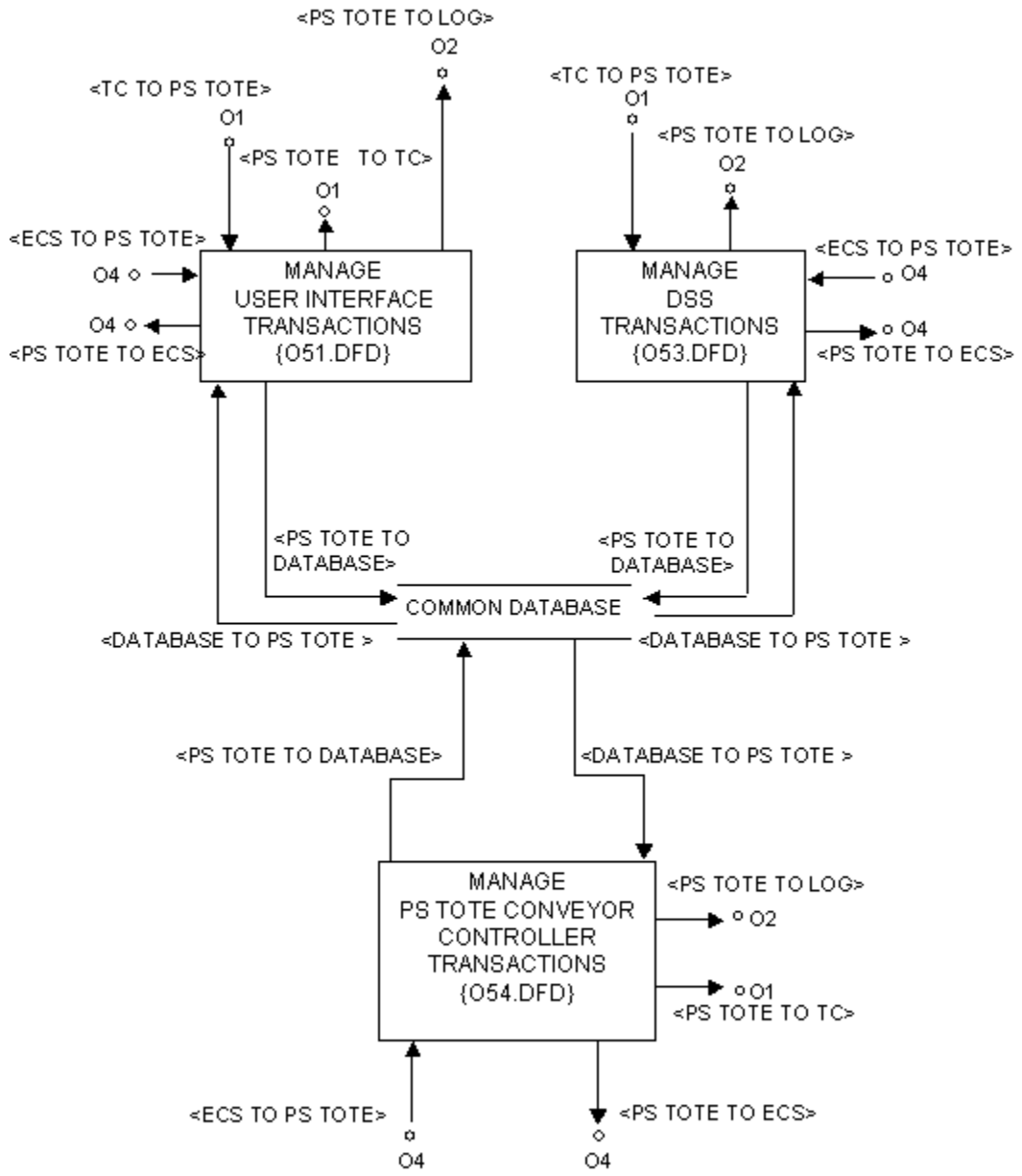

3.2.29.5.1 **O51.DFD**

Process ID #	Date
O51.DFD - Manage User Interface Transactions	May 29, 2002

Requirement ID #(s)

SECS-RC1.1, SECS-RC1.1.19, SECS-RC1.2, SECS-RC1.3, SECS-RC1.4, SECS-RC2.5, SECS-RC2.6, SECS-RC3.1, SECS-RC4.2, SECS-RC4.3, SECS-RC5

Data Flow Diagram

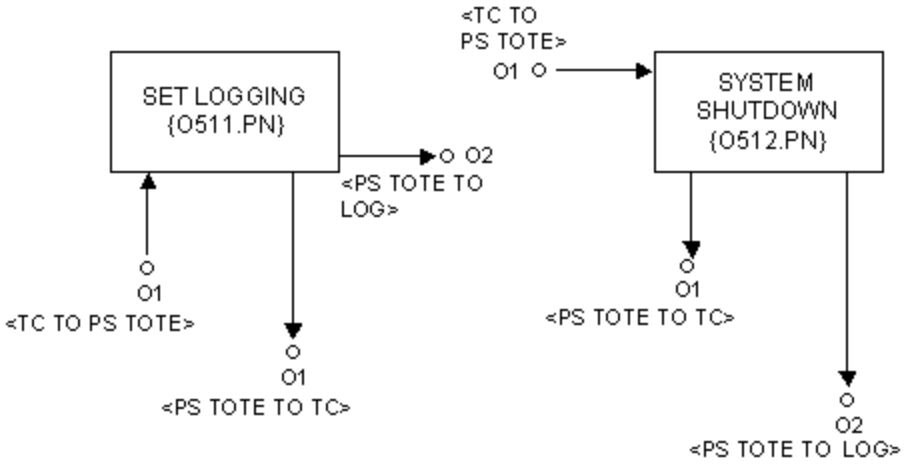

3.2.29.5.1.1 **O511.PN - Set Logging**

Process Name	Process ID #	Date
Set Logging	O511.PN	May 29, 2002

Requirement ID #(s)
SECS-RC1.1, SECS-RC2.5, SECS-RC4.3, SECS-RC1.1.19

Process Narrative

This process accepts a User Interface request (A07) from the PS Tote Conveyor Traffic Controller Communications (O1.PN) process to turn logging either on or off. If invalid data was received, an error message is formatted and sent to the PS Tote Conveyor Traffic Controller Communications (O1.PN) process. This process sends formatted messages to the PS Tote Conveyor Message Logger (O2.PN) process for possible logging.

3.2.29.5.1.2 **O512.PN - System Shutdown (Software)**

Process Name	Process ID #	Date
System Shutdown (Software)	O512.PN	May 29, 2002

Requirement ID #(s)
SECS-RC1.1, SECS-RC1.1.19, SECS-RC2.6

Process Narrative

This process accepts a User Interface request (A09) from the PS Tote Conveyor Traffic Controller Communications (O1.PN) process to set a flag to shutdown the PS Tote Conveyor Subcontroller. If invalid data was received, an error message is formatted and sent to the PS Tote Conveyor Traffic Controller Communications (O1.PN) process. This process sends formatted messages to the PS Tote Conveyor Message Logger (O2.PN) process for possible logging.

3.2.29.5.2 **O53.DFD**

Process ID #	Date
O53.DFD - Manage DSS Transactions	May 29, 2002

Requirement ID #(s)

SECS-RC1.1, SECS-RC1.1.19, SECS-RC1.2, SECS-RC1.3, SECS-RC1.4

Data Flow Diagram

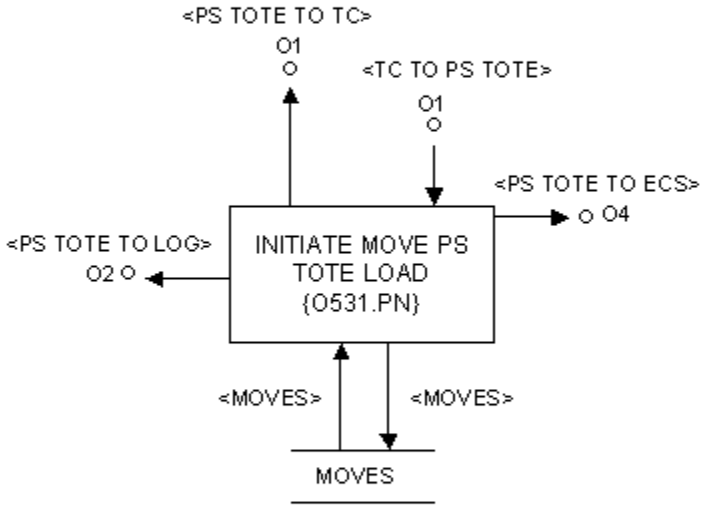

3.2.29.5.2.1 **O531.PN - Initiate Move PS Tote Load**

Process Name	Process ID #	Date
Initiate Move PS Tote Load	O531.PN	May 29, 2002

Requirement ID #(s)

SECS-RC1.1, SECS-RC1.1.19, SECS-RC1.2, SECS-RC1.3, SECS-RC1.4, SECS-RC2.11, SECS-RI25.0

Process Narrative

Requests coming to this process can come from either the Upper Tier (SMM) or User Interface (M01) through the PS Tote Conveyor Traffic Controller Communications (O1.PN) process. The PS Tote conveyor destination is obtained and the move is stored in the Moves database to be initiated through a New PS Tote Move message (O541) when the scanner receives the PS Tote. This process will also send formatted messages to the PS Tote Conveyor Message Logger (O2.PN) process for possible logging.

3.2.29.5.3 **O54.DFD**

Process ID #	Date
O54.DFD - Manage PS Tote Conveyor Transactions	May 29, 2002

Requirement ID #(s)

SECS-RC1.1, SECS-RC1.1.19, SECS-RC1.2, SECS-RC1.3, SECS-RC1.4

Data Flow Diagram

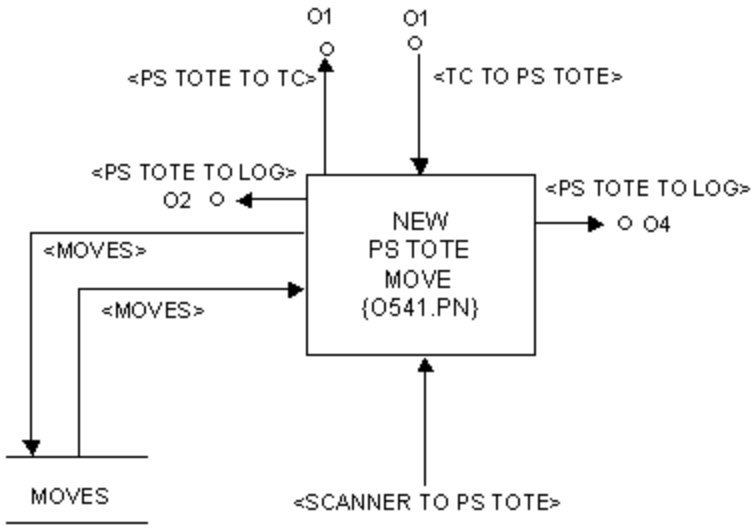

3.2.29.5.3.1 **O541.PN - New PS Tote Move**

Process Name	Process ID #	Date
New PS Tote Move	O541.PN	May 29, 2002

Requirement ID #(s)
SECS-RC1.1, SECS-RC1.1.19, SECS-RC12.4

Process Narrative

This process receives a new PS Tote Move (M01) message from the PS Tote Conveyor Device Communications (O1.PN) process. This message comes as a result of the scanner conversation New PS Tote Move. The scanner sends the necessary information to retrieve a move, and has validated the information. However, if invalid information is received, an error message is formatted and sent to the PS Tote Conveyor Traffic Controller Communications (O1.PN) process. The proper message is formatted and sent to the PS Tote Conveyor Message /Buffering Process (O4.PN). This process sends formatted messages to the PS Tote Conveyor Message Logger (O2.PN) process for possible logging. The process will then retrieve the new move in the 'Moves' records, and a request is sent to the PS Tote Scanner (O541.PN) process to move the item.

3.2.30 **AA.DFD**

Process ID #	Date
AA.DFD	April 24, 2003

Requirement ID #(s)

SECS-RC1, SECS-RC1.1.13, SECS-RC1.1.21, SECS-RC1.2, SECS-RC1.3, SECS-RC1.4, SECS-RC3, SECS-RC3.1, SECS-RC3.2, SECS-RC3.3, SECS-RC4, SECS-RC4.2, SECS-RC4.3, SECS-RC5, SECS-RI1.0, SECS-RI27.0

ata Flow Diagram

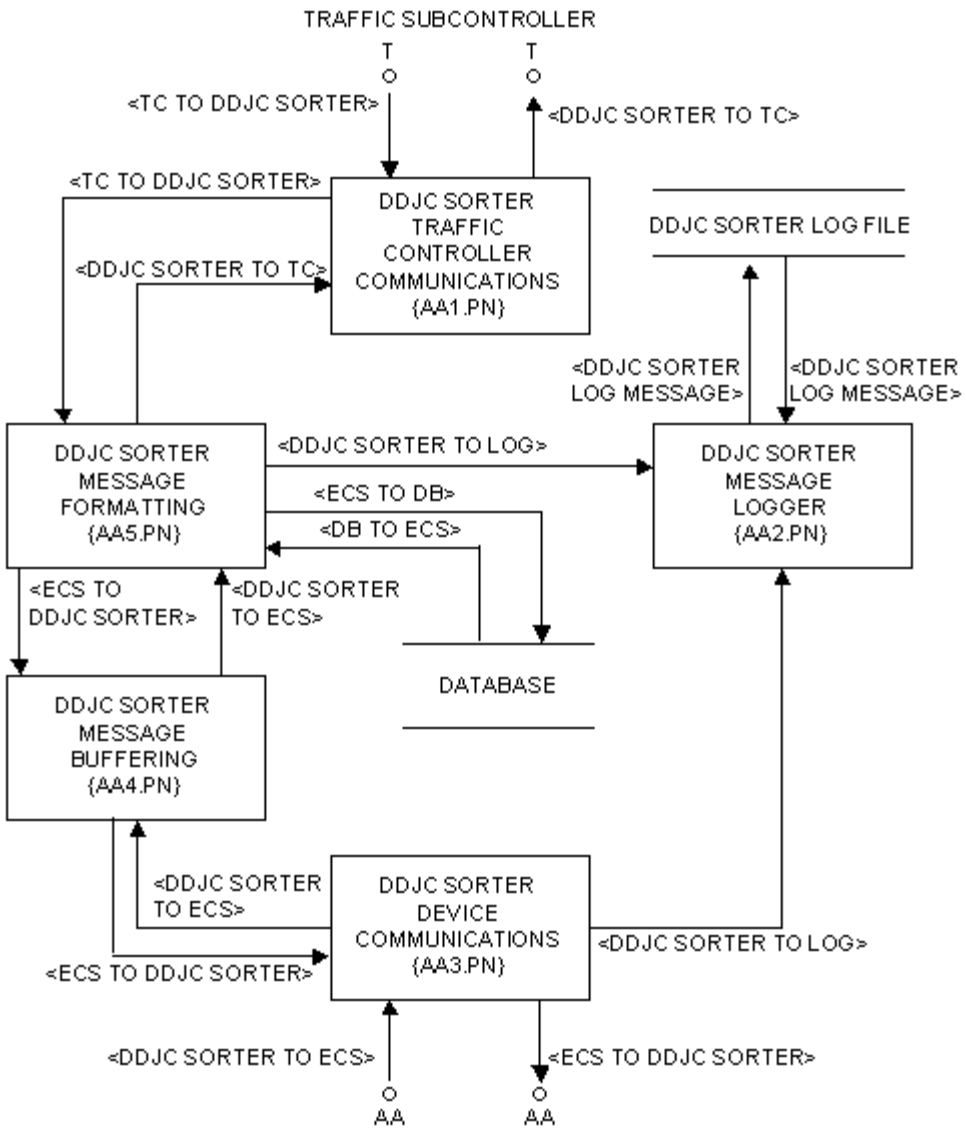

3.2.30.1 AA1.PN - Tracy Sorter Traffic Controller Communications

Process Name	Process ID #	Date
DDJC Sorter Traffic Controller Communications	AA1.PN	April 24, 2003

Requirements ID #(s)

SECS-RC1, SECS-RC-1.1.13, SECS-RC1.1.21, SECS-RC-1.2, SECS-RC-1.3, SECS-RC-1.4, SECS-RC5, SECS-RI-1.0, SECS-RC3, SECS-RC3.2, SECS-RC3.3, SECS-RI27.0

Process Narrative

This process receives messages from the Traffic Controller (T.DFD) and passes them on to the Sorter Message Formatting and Scheduling Process. This process receives response and status messages from the Sorter Message Formatting and Scheduling Process and sends them to the Traffic Controller (T.DFD). This process handles all message transfer protocols and handshaking between the Traffic Controller (T.DFD) and the subcontroller (AA.DFD). This process handles message transmission from memory or hardware.

3.2.30.2 AA2.PN - Tracy Sorter Message Logger

Process Name	Process ID #	Date
DDJC Sorter Message Logger	AA2.PN	April 24, 2003

Requirements ID #(s)
SECS-RC4, SECS-RC-4.3

Process Narrative

This process receives messages from the DDJC Sorter Message Formatting and Scheduling Process and the DDJC Sorter Device Communications Process and if logging is enabled logs the message to the DDJC Sorter Log File.

3.2.30.3 AA3.PN - Sorter Device Communications

Process Name	Process ID #	Date
DDJC Sorter Device Communications	AA3.PN	April 24, 2003

Requirements ID #(s)

SECS-RI5.0, SECS-RC-3, SECS-RC-3.1, SECS-RC1, SECS-RC1.1.13, SECS-RC1.1.21, SECS-RC1.2, SECS-RC1.3, SECS-RC-1.4, SECS-RC-5, SECS-RI27.0

Process Narrative

This process receives messages from the DDJC Sorter Message Buffer Process and transmits them to the DDJC Sorter Controllers. This process receives acknowledgement and status responses from the DDJC Sorter Controllers and forwards them to the DDJC Sorter Message Buffer Process for further processing. This process sends device messages to the DDJC Sorter Message Logger Process for logging. This process handles all transfer protocols and handshaking required by the device communications.

3.2.30.4 AA4.PN - DDJC Sorter Message Buffering

Process Name	Process ID #	Date
DDJC Sorter Message Buffering	AA4.PN	April 24, 2003
Requirements ID #(s)		
SECS-RC-3, SECS-RC3.1, SECS-RC4, SECS-RC4.2		
Process Narrative		
This process will receive messages from the DDJC Sorter Message Formatting and Scheduling Process and the DDJC Sorter Device Communications Process and inserts and extracts the messages into and from their respective memory buffers.		

3.2.30.5 AA5.PN -DDJC Sorter Message Formatting and Scheduling

Process Name	Process ID #	Date
DDJC Sorter Message Formatting and Scheduling	AA5.PN	April 24, 2003

Requirements ID #(s)

SECS-RI5.0, SECS-RC3, SECS-RC3.1, SECS-RC1, SECS-RC1.1.13, SECS-RC1.1.21, SECS-RC1.2, SECS-RC1.3, SECS-RC1.4, SECS-RC5, SECS-RI27.0

Process Narrative

This process receives messages from the DDJC Sorter Traffic Controller Communications Process, stores them in the database for retrieval, and formats them for transmission to the CCP and Mission Sorter Controllers. This process sends formatted messages to the DDJC Sorter Message Logger Process for logging.

3.2.31 **BB.DFD**

Process ID #	Date
BB.DFD	November 10, 2003

Requirement ID #(s)

SECS-RC1.1, SECS-RC1.1.9, SECS-RC1.4, SECS-RC3.1, SECS-RC4.2, SECS-RC4.3

ata Flow Diagram

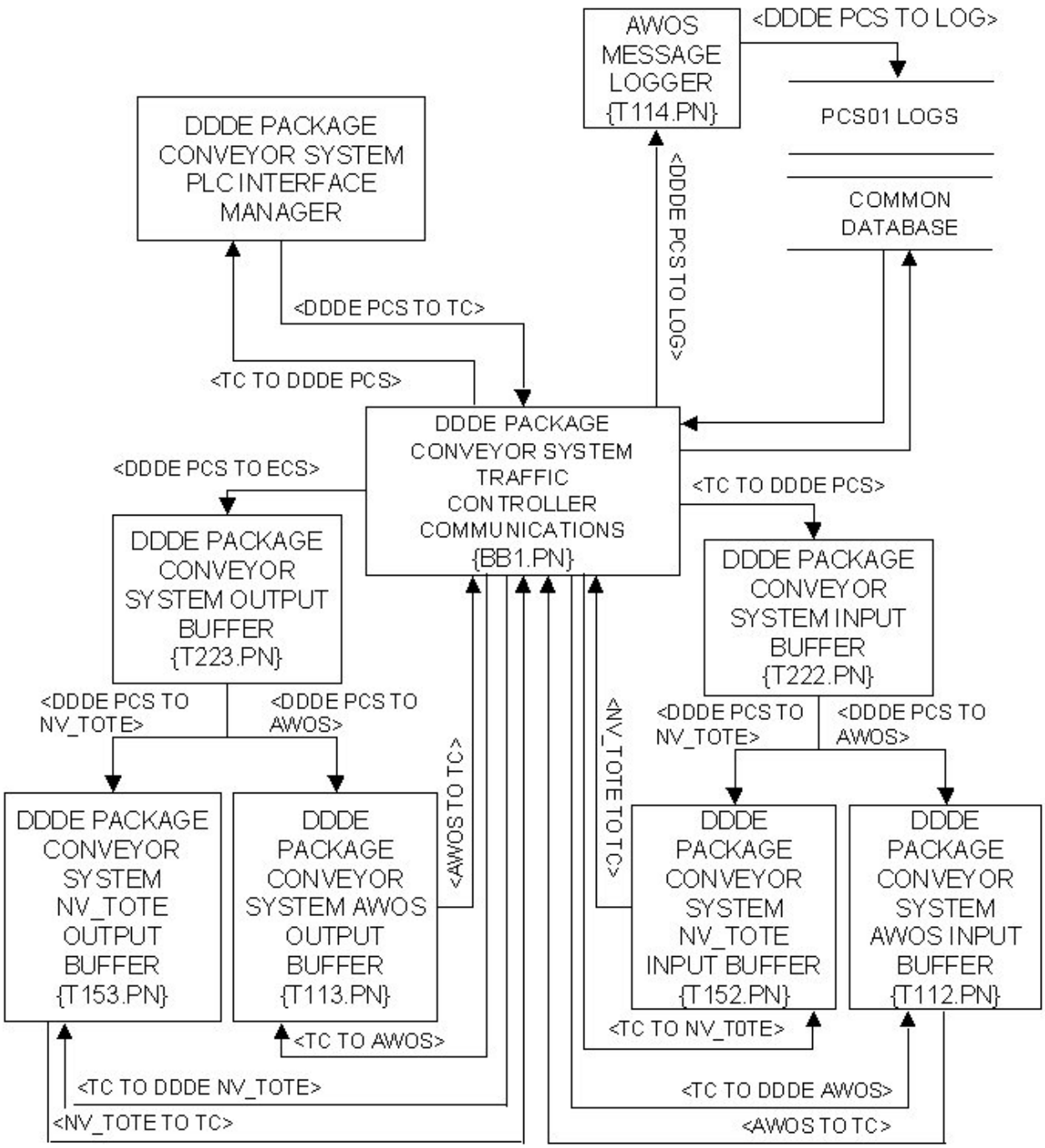

3.3 CSCI External Interface Requirements

External interface requirements are defined in the ECS Interface Design Description (IDD). The requirements are matched with CSCI's in section 3.2 of this document. Rules of Communication between DSS and ECS are outlined in section 3.0 of the IDD.

3.4 CSCI Internal Interface Requirements

Internal interface requirements are defined in section 3.2 of this document as the data flows between subsystems in the zero level data flow diagram. They are broken down into sub-elements in the Data Dictionary in APPENDIX B of this document. Internal and interface message formats are outlined in section 3.0 of the IDD.

3.5 CSCI Internal Data Requirements

Internal data requirements are defined in the Data Dictionary in APPENDIX B of this document.

3.6 Adaptation Requirements

Site-specific data will be maintained in tables on the system and will be accessed and updated via the User Interface Subsystem. The following subparagraphs describe a preliminary list of tables to be developed and utilized.

3.6.1 Location to Subcontroller Tables

(trf_table1, trf_table2)
This table contains fields that represent the range of locations dedicated to a specific subcontroller.

3.6.2 Workstation to Index Tables

(nlstm.tab, CARTABLE.DAT, NMCTABLE.DAT, STKTABLE.DAT)
This table contains a total list of workstations and a relative record index into the routing table.

3.6.3 Routing Table

(nlsrt.tab)
This table contains a total list of workstation relative record indexes and an array of subcontrollers that must be activated to perform movement between two workstations.

3.6.4 Subcontroller Table

(ecs.ini)
This table contains a total list of subcontrollers and a relative record number index.

3.6.5 Location Conversion Table

(nlsal.tab)
This table contains a total list of locations and their controller equivalent.

3.6.6 Device Table

(nlspt.tab)
This table contains a total list of hardware and all protocol and configuration information required for each controller to include message formats.

3.6.7 Destination to Divert Tables

(Tote_table_dest.dat)
This table contains a list of destinations and the related diverts.

3.7 Safety Requirements

The system will comply with the safety requirements currently supported by the legacy systems being replaced by ECS.

3.8 Security and Privacy Requirements

The system shall provide such access security as is necessary to preclude all but authorized personnel access to the system (e.g. password protection). Security measures, like automatic callback, shall be incorporated into the remote login feature.

3.9 System Environment Requirements

The system will require an environment favorable to the operation of computer equipment. This includes, but is not limited to, protection from moisture, wind, dust, unreasonable heat, shock, and radiation.

3.9.1 Computer Resource Requirements

This section will describe the hardware/software operating environment required for this system.

3.9.2 Computer Hardware Requirements

At a minimum, this system requires a single hardware platform that is capable of running Windows NT, has 24MB of RAM, and is equipped with an LU6.2 communications card. Other hardware requirements will vary by implementation depending on the throughput requirements of the installation. Depending on site, these may include, but are not limited to, greater RAM, workstation-level processing power, multiple CPUs, multiple hardware platforms, LAN connectivity, and communications cards.

3.9.3 Computer Hardware Resource Utilization Requirements

The system will require full use of hardware resources provided by the hardware platform.

3.9.4 Computer Software Requirements

At a minimum, the system will require the current version of the Windows NT Workstation operating system and the requisite communications drivers necessary for LU6.2 communication, and the MHE interfaces at each site. Depending on site, other software requirements may include, but are not limited to, LAN software, and the current version of the Windows NT Server operating system.

3.9.5 Computer Communications Requirements

The system shall require communications lines and converters necessary for the communications to the DSS mainframe and the various MHE requiring computer-control. The latter requirement will vary by installation/site.

3.10 System Quality Factors

The system shall perform as specified in the ECS Systems/Subsystems Specification. There are no additional system requirements relating to system quality.

3.11 Design and Construction Constraints

The following design and construction constraints will be followed:

- The system will be based upon the Windows NT operating environment.
- The system will be designed and coded using Object-Oriented design techniques.
- The system will be coded in the C++ computer language.
- The system shall be designed to minimize site-dependence and machine-dependence.

3.12 Personnel-Related Requirements

There are no personnel-related requirements.

3.13 Training-Related Requirements

In addition, the implementation personnel shall provide user training to the staff at each implemented site.

3.14 Logistics-Related Requirements

The system shall control each site's MHE in a manner that produces no loss in functionality or efficiency as compared to current scenarios. There are no additional requirements.

3.15 Other Requirements

The system shall provide full documentation and user manuals.

3.16 Packaging Requirements

It is anticipated that the initial system and any subsequent releases will be delivered on three and a half inch diskettes for installation on site hardware.

3.17 Precedence and Criticality of Requirements

The highest importance is placed on the requirements that emphasize control of MHE as it currently exists, without loss of functionality or efficiency. Second to it are requirements that emphasize portability and scalability of the system. All other requirements have equal weight.

4.0 QUALIFICATION PROVISIONS

All of the requirements specified in section 3 will be verified as resolved by a combination of existing DLA/DSDC demonstration.

4.1 Testing and Analysis Methodologies

At each testing phase test cases will be created to test the software elements. All interface messages will be tested for all possible field combinations. During the Unit Test and Unit Integration Test (System Test) periods, the equipment controllers will be emulated with an internally developed software product on another PC. All variations of protocol hardware will be present at the development site for full line protocol testing.

APPENDIX A DSS - ECS STRUCTURED ANALYSIS APPROACH TO ECS

1.0 STRUCTURED ANALYSIS APPROACH TO ECS

The primary goal of Structured Analysis and Design is to minimize the probability of omitting critical elements of the system in the early phases of the system development cycle. Structured Analysis and Design provides a discipline within which the system may be modeled, discussed with end users, and easily modified to accommodate change and growth. It provides for user feedback early in the development cycle where changes are most easily handled and least expensively made.

Often the statement is made, "A picture is worth a thousand words". Too often, system designers and engineers opt for the thousand words. DSDC-S has attempted to capitalize on the "picture", supported with a narrative description. This System/Subsystem Design Document uses Data Flow Diagrams (DFDs) to graphically model the Standardized Equipment Control System. Process Narratives are used to describe the Functions of the system and the Data Dictionary to describe the contents of the Data Flows and Data Stores.

1.1 Primer on Data Flow Diagrams and Process Narratives

The Data Flow Diagrams are composed of several elements: Externals, Processes, Data Flows, and Data Stores. See sections 3.2.1 and 3.2.2. Each element of the Data Flow Diagram has a descriptive name to uniquely identify it. For example, names of Data Flows describe the Data Flowing between DFD elements rather than describing an activity. Names of processes are descriptive of the function performed on the data within the process. Similar rules apply to externals and data stores.

1.2 Externals

Externals are represented by boxes on the context level or top level diagram. Thereafter, externals are represented by large dots. See sections 3.2.1 and 3.2.2. Externals provide a source for Data Flowing into the system being modeled or provide a sink for Data Flowing out of the system. Examples of external elements are the DSS, Operators, Programmable Logic Controllers (PLCs), etc.

Externals to other systems, such as the NLSCs, include the name of the process on the receiving system that handles the data. The process name is surrounded by braces.

1.3 Processes

Processes are represented by boxes. A process shows some amount of work being performed on the data flowing into it, transforming the incoming Data Flow(s) into outgoing Data Flow(s).

Since the system being modeled is too large to fit comfortably on a single page, a method of partitioning must be employed. The ECS is initially partitioned into the subsystems. Still, at this level of partitioning, it is impossible to represent individual subsystems on a single piece of paper, so the subsystems are further partitioned. This process continues until components can be portrayed with simple DFDs of primitive functions. At the top of the hierarchy of processes is a "parent" process. This first level breakdown diagram is known as the "context diagram". The next level diagram contains all the "children" of the "parent" diagram. Each process represented on a diagram, if not at a primitive functional level, becomes a parent to its next level of partitioning, and so on until each process is eventually partitioned to a primitive functional level.

Each process has a unique number associated with it in addition to its name. This number indicates the position and relationship the process has in the hierarchy of processes. To help the reader identify which subsystem a process belongs to, letter designations are used on the first level of partitioning representing physical subsystems.

"A"	-	Designates the AGV System Controller Subsystem
"B"	-	Designates the Sorter Subsystem
"C"	-	Designates the Carousel System Controller Subsystem
"D"	-	Designates the Tote/Package System Controller Subsystem
"E"	-	Designates the Active Item System Controller Subsystem
"F"	-	Designates the Tote Conveyor Subsystem
"G"	-	Designates the Triax ASRS System Controller Subsystem
"H"	-	Designates the DLA Hewlett Packard Subsystem
"I"	-	Designates the Y109 Controller Subsystem
"J"	-	Designates the AWOS Subcontroller
"K"	-	Designates the Keypad Subsystem
"L"	-	Designates the Towline Subsystem
"M"	-	Designates Upper Tier changes
"N"	-	Designates the NLSC System Controller Subsystem
"O"	-	Designates the Puget Sound (PS) Tote Conveyor Controller Subsystem
"P"	-	Designates the DLA Allen-Bradley PLC Subsystem
"Q"	-	Designates the CSF Subsystem
"R"	-	Designates the Raymond Carousel System Controller Subsystem
"S"	-	Designates the Stacker Processing Subsystem
"T"	-	Designates the Traffic Controller Subsystem
"U"	-	Designates the User Interface Subsystem
"V"	-	Designates the Norfolk Virginia DPI Tote Conveyor Subcontroller
"W"	-	Designates the Pallet Conveyor Subsystem
"X"	-	Designates Upper Tier changes
"Y"	-	Designates Upper Tier changes
"Z"	-	Designates Upper Tier changes
"AA"	-	Designates DDJC Sorter Subsystem

At the next level down in the hierarchy, a number is added to the letter designation of the parent process. This procedure continues until the primitive functional level is reached. Each process number has an extension appended to it. If the extension is ".DFD", the process is further partitioned on subsequent pages. If the extension is ".PN", the process is at a primitive level and a Process Narrative exists to describe its function. See sections 3.2.1 and 3.2.2.

1.3.1 Data Flows

Data Flows are represented by lines with arrow heads indicating direction of Data Flow among the elements of the Data Flow diagram. A Data Flow is like a pipeline through which packets of information flow from a point of origin to a destination. Data may flow between processes, or between processes and data stores, or between externals and processes. A Data Flow should not represent a flow of control such as an activator of a process because it contains no data. There may be some control implied in the process narratives but there will be no control flows represented in the Data Flow diagrams. Representation of control will be deferred until the detail design phase where the actual program modules and program specifications will be generated and documented.

1.3.2 Data Stores

Data Stores are represented by parallel lines. A data store indicates a temporary repository of data and may be files in the database, global common areas of memory, disk files, or local memory areas that are shared among processes.

1.3.3 Process Narratives

Process Narratives provide the written description of the processes in the system being modeled. The Process Narratives are composed of two basic components: the description and the logic or structured English sections.

1.3.4 Data Dictionary

The Data Dictionary provides the description of each Data Flow, data store, and data element. Essentially, definitions in the Data Dictionary are top-down partitioning of data. An understanding of the data dictionary operators and symbols is important in order to comprehend the data structures represented there.

=	means IS EQUIVALENT TO.
+	means AND.
[]	means EITHER-OR; i.e., select one of the options enclosed in the brackets.
{}	means ITERATIONS OF the component enclosed.
()	means that the enclosed component is OPTIONAL.
|	means OR. It is used to separate the options enclosed in the brackets.

Data elements identified as components of structures or Data Flows, have their own entry in the dictionary that includes a description, data type, and size.

1.4 Equipment Control System Context and Zero Level Diagrams

The ECS Context and Zero Level Diagrams are provided to give a graphic overview of the environment in which the Equipment Control System operates, and to identify the major subsystems in the ECS.

1.4.1 The Context Diagram

The Context Diagram shows the external entities (systems, organizations, or people) outside the realm of the ECS with which the ECS must interact. It shows the data that must enter and that which must leave the ECS, and therefore defines the boundary between the system and the environment in which it operates. Externals have a direct impact on the functions performed by the ECS in that the ECS must act on data received from and sent to the Externals. However, the context diagram does not describe the internal details of the ECS.

Data Flows on the Context Diagram represent flow of information between the ECS and Externals. These Data Flows consist of multiple transactions or data records. Aggregate names (Data Structures) are used rather than individual transactions in order to avoid congestion and confusion on the Context Level. These Data Structures are defined in the Data Dictionary.

1.4.2 Zero Level Data Flow Diagram

The Zero Level Data Flow Diagram graphically shows the partitioning of the ECS into the major subsystems and depicts the interaction among the subsystems. As on the Context Diagram, Data Flows are structures consisting of aggregate transactions between subsystems and are defined in the Data Dictionary. Additionally, all data stores used within ECS are represented on the Zero Level by a single data store named 'Common Database'. This was done to clearly demonstrate that each subsystem is using a common database, and to avoid cluttering the diagram with all the individual data stores used within the ECS.

In the purest use of Structured Design and Analysis, the Zero Level Data Flow Diagram represents major processes in the system depicted on the Context Diagram. In the case of the Equipment Control System, the Zero Level Diagram shows the major subsystems within the ECS. It is a "Context Diagram" for ECS Subsystems since it describes the environment in which the subsystems function and shows the entities or "externals" that interact with each subsystem. As can be seen from the Zero Level Diagrams, the subsystems communicate via subsystem-to-subsystem communication and via data stored in the Common Database.

1.5 Symbol and Syntax Conventions

Several symbolic and syntactic conventions are used in the Data Flow Diagrams (DFDs) and Process Narratives to assist the reader in understanding information presented. An understanding of these "rules" is essential in order to effectively review the diagrams and narrative descriptions.

Data Flow names on DFDs are enclosed with Less Than and Greater Than symbols (e.g. <Data Flow>). This is done to differentiate Data Flow names from general comments and process names that appear on a DFD. Within each process box on a DFD, a file name is indicated. Each file name includes an extension of ".DFD", which indicates that the process is further broken down into more processes, or an extension of ".PN" which indicates that the process is at the primitive level and the next level of documentation is a process narrative. File name is always enclosed with Braces (e.g. {Filename.DFD} or {Filename.PN}).

The same symbols are used in all Process Narrative documentation to help clarify the narratives for the reader. Specific Data Flow names referenced in narratives are enclosed in the Less Than and Greater Than symbols (e.g. <Data Flow>), just as they are on the Data Flow Diagrams. Specific Data Store references in the Process Narratives are delimited by single quote marks (e.g. 'Data Store'). This indicates that the exact name can be found as a Data Store on the DFD that corresponds to the Process Narrative, and can be found in the Data Dictionary. Double quotes are used in Process Narratives to add emphasis to or highlight words or phrases (e.g. "emphasized phrase"). This convention is used for emphasis throughout the Process Narratives, and should not be confused with the use of single quote marks for Data Stores.

APPENDIX B DSS - ECS DATA DICTIONARY

This section provides a data structure list, data definitions, and a list of processes and externals for the ECS.

1.0 ECS Data Structure List

All structured data flows and data stores represented on the DFDs are listed herein. Each structure is defined as a combination of data elements and/or other structures. Symbols and logical operators used in this structure list are defined as follows:

= means IS EQUIVALENT TO.

+ means AND.

[] means EITHER-OR; i.e., select one of the options enclosed in the brackets.

{} means ITERATION OF the component enclosed. Numbers proceeding and following braces indicate minimum and maximum number of occurrences, respectively.

() means that the enclosed component is OPTIONAL.

| means OR. It is used to separate the options enclosed in brackets.

01 ACTIVE ITEM MOVE	=	MESSAGE TYPE
	+	PLC/SCANNER NUMBER
	+	DESTINATION
	+	CONTROL NUMBER
01 CART ARRIVAL	=	MESSAGE TYPE2
	+	CART ID
	+	LOCATION4
01 CHUTE DESTINATION	=	MESSAGE TYPE2
	+	CONTROL NUMBER
	+	CHUTE ID
01 NEW TOTE MOVE	=	MESSAGE TYPE2
	+	CHAIN ID
	+	CHAIN LENGTH
	+	DESTINATION3
	+	TOTE ID
01 TOTE PACKAGE MOVE	+	PLC/SCANNER NUMBER
	+	DESTINATION
02 MISSED DIVERT	=	MESSAGE TYPE2
	+	CART ID
	+	LOCATION4
02 MODIFY DESTINATION	=	MESSAGE TYPE2
	+	CHAIN ID
	+	CHAIN LENGTH
	+	CURRENT DESTINATION
	+	TOTE ID
	+	NEW DESTINATION
02 TABLE FULL	=	MESSAGE TYPE2
03 CART DESTINATION	=	MESSAGE TYPE2
	+	CART ID
	+	DESTINATION
	+	RELEASE LOCATION
	+	CHAIN ID
	+	CHAIN LENGTH
03 PACKAGE DUMPED	=	MESSAGE TYPE2
	+	CONTROL NUMBER
	+	CHUTE ID
	+	FINAL DESTINATION STATUS

	+	TIME
04 CART AT WORKSTATION	=	MESSAGE TYPE2
	+	CART ID
	+	LOCATION4
04 STATUS MESSAGE	=	MESSAGE TYPE2
	+	SORTER STATUS REQUEST
04 STATION ENABLE/DISABLE	=	MESSAGE TYPE2
	+	PLC ZONE NUMBER
	+	STATION ID
05 PRODUCT FILE TABLE PURGED	=	MESSAGE TYPE2
05 TRANSFER/LOOP STATUS	=	MESSAGE TYPE2
	+	STATUS BIT MAP
06 PRODUCT FILE TABLE DOWNLOAD COMPLETE		
	=	MESSAGE TYPE2
06 TOWLINE SYSTEM CONTROLLER STATUS AND UPLOAD COMMAND		
	=	MESSAGE TYPE2
	+	STATUS COMMAND
	+	UPLOAD REQUEST
06 UNLOCK WORKSTATION	=	MESSAGE TYPE2
	+	CHAIN ID
07 AI STARTUP/SHUTDOWN COMPLETE	=	MESSAGE TYPE
	+	PLC/SCANNER NUMBER
	+	STATUS
07 CART DESTINATION FILE UPLOAD	=	MESSAGE TYPE2
	+	CART DESTINATIONS
07 SET WORKSTATION TYPE	=	MESSAGE TYPE2
	+	RANDOM STATION
	+	RETROGRADE STATION
	+	NEW PROCUREMENT STATION
	+	DEPOT PROPERTY STATION
07 STATUS INQUIRY	=	MESSAGE TYPE2
08 ACTIVE ITEM STARTUP/SHUTDOWN	=	MESSAGE TYPE
	+	PLC/SCANNER NUMBER

	+	STATUS
08 CSC STATUS (STARTUP/SHUTDOWN)	=	MESSAGE TYPE2
	+	PLC ZONE NUMBER
	+	STATUS COMMAND
08 SORTER STATUS	=	MESSAGE TYPE2
	+	SORTER MODE
08 TOWLINE ZONE MODE STATUS	=	MESSAGE TYPE2
	+	PLC ZONE NUMBER
	+	STATUS
09 ABORT CHAIN	=	MESSAGE TYPE2
	+	CHAIN ID
	+	CHAIN LENGTH
09 ACTIVE ITEM SCANNER REPLY	+	PLC/SCANNER NUMBER
	+	CONTROL NUMBER
	+	CARRIAGE RETURN LINE FEED
09 CONVEYOR PLC ZONE STATUS	=	MESSAGE TYPE2
	+	PLC ZONE NUMBER
	+	STATUS
09 TOTE PACKAGE SCANNER REPLY	+	SCANNER NUMBER
	+	CONTROL NUMBER
10 FIRST LOOP TRACKING FILE UPLOAD	=	MESSAGE TYPE2
	+	TRACKING FILE CONTENTS
11 LOAD PRESENT	=	MESSAGE TYPE2
	+	DESTINATION3
11 SECOND LOOP TRACKING FILE UPLOAD	=	MESSAGE TYPE2
	+	TRACKING FILE CONTENTS
12 NEW PALLET MOVE	=	MESSAGE TYPE2
	+	DESTINATION3
	+	CONTROL NUMBER
	+	SOURCE3
12 REQUEST CART INFORMATION	=	MESSAGE TYPE2
	+	CART ID
13 CART INFORMATION REQUEST REPLY	=	MESSAGE TYPE2
	+	CART ID

	+	DESTINATION
	+	CHAIN ID
	+	CHAIN LENGTH
	+	RECIRCULATION COUNT
13 PALLET ARRIVAL	=	MESSAGE TYPE2
	+	DESTINATION3
	+	CONTROL NUMBER
14 TRANSPORTER STATUS	=	MESSAGE TYPE2
	+	CONVEYOR MAP
14 UNLOCK WORKSTATION	=	MESSAGE TYPE2
	+	SPUR NUMBER
A01 INTERNAL MESSAGE	=	MESSAGE ID
	+	START/STOP CODE
	+	DEVICE
A03 INTERNAL MESSAGE	=	MESSAGE ID
	+	LOCATION9
A05 INTERNAL MESSAGE	=	MESSAGE ID
	+	CONTROL NUMBER
	+	LOCATION
A07 INTERNAL MESSAGE	=	MESSAGE ID
	+	ON/OFF FLAG
A09 INTERNAL MESSAGE	=	MESSAGE ID
	+	START/STOP CODE
	+	DEVICE
A21 INTERNAL MESSAGE	=	MESSAGE ID
A41 INTERNAL MESSAGE	=	MESSAGE ID
	+	WORKSTATION
	+	WORK FLAGS
A44 INTERNAL MESSAGE	=	MESSAGE ID
	+	LOCATION
	+	REASON CODE
A99 INTERNAL MESSAGE	=	MESSAGE ID
A-B PLCS BARCODE FROM SCANNER	=	MESSAGE ID
	+	A-B PLCS CONTROL NUMBER

```
A-B PLCS BIN PACKING MOVE          =   MESSAGE ID
                                   +   A-B PLCS CONTROL
                                       NUMBER
                                   +   A-B PLCS SOURCE
                                   +   A-B PLCS DESTINATION
                                   +   A-B PLCS HEAVY LIGHT
                                       INDICATOR

A-B PLCS LOG MESSAGE               =   STANDARD LOG MESSAGE

A-B PLCS LTL PACKING MULTIPLE PALLET MOVE
                                   =   MESSAGE ID
                                   +   2{A-B PLCS CONVEYANCE
                                       ID}2
                                   +   A-B PLCS SOURCE
                                   +   A-B PLCS DESTINATION
                                   +   FILLER1

A-B PLCS LTL PACKING SINGLE PALLET MOVE
                                   =   MESSAGE ID
                                   +   A-B PLCS CONVEYANCE ID
                                   +   A-B PLCS SOURCE
                                   +   A-B PLCS DESTINATION
                                   +   FILLER1

A-B PLCS RECEIVING MULTIPLE TOTE MOVE
                                   =   MESSAGE ID
                                   +   2{A-B PLCS CONVEYANCE
                                       ID}8
                                   +   A-B PLCS SOURCE
                                   +   A-B PLCS DESTINATION
                                   +   FILLER1

A-B PLCS RECEIVING SINGLE TOTE MOVE =  MESSAGE ID
                                   +   A-B PLCS CONVEYANCE ID
                                   +   A-B PLCS SOURCE
                                   +   A-B PLCS DESTINATION
                                   +   FILLER1

A-B PLCS TO CDB                        =  [MODULE
                                       |  MOVE
                                   |   TOTE]

A-B PLCS TO ECS                    =   A-B PLCS BARCODE FROM
                                       SCANNER
```

A-B PLCS TO TC	=	[UAR
	|	UIR
	|	UMR
	|	ALERT
	|	SUBCONTROLLER UPDATE]
AGV	=	AGV ID
	+	AGV TRAN ID
	+	AGV STATUS
	+	AGV MODULE ID
	+	AGV SRC P&D
	+	AGV DEST P&D
AGV LOG MESSAGE	=	STANDARD LOG MESSAGE
AGV TO CDB	=	[AGV
	|	AISLE
	|	AREA
	|	MODULE
	|	STAND
	|	TRAN]
AGV TO ECS	=	[L01 AGV RETURN TO SERVICE
	|	L02 AGV OUT OF SERVICE
	|	L03 AGV INQUIRY RESPONSE
	|	L04 STAND INQUIRY RESPONSE
	|	L05 PICKUP/DELIVERY CONFIRMATION
AGV TO ECS	|	L06 END OF QUEUED TRANSACTIONS FLAG
	|	L98 ACKNOWLEDGEMENT MESSAGE
	|	L99 ERROR TRANSACTION]
AGV TO LOG	=	[AGV TO TC
	|	TC TO AGV
	+	STANDARD LOG MESSAGE
AGV TO TC	=	[UAR
	|	UIR
	|	UMR
	|	ALERT
	|	SUBCONTROLLER UPDATE]

AIC TO ECS	=	[ACTIVE ITEM CONVEYOR TO ECS]
AIC TO TC	=	[ACTIVE ITEM CONVEYOR TO TC]
AISLE	=	AISLE NUMBER
	+	AISLE MODE
	+	AISLE RQST TYPE
	+	AISLE FIRST MODULE
	+	AISLE LAST MODULE
AIR FORCE ALERT OFF MESSAGE	=	AIR FORCE COMMAND
AIR FORCE ALERT ON MESSAGE	=	AIR FORCE COMMAND
AIR FORCE DELIVER TRAY MESSAGE	=	AIR FORCE COMMAND
	+	AIR FORCE SIDE
	+	AIR FORCE BAY
	+	AIR FORCE TIER
AIR FORCE RESET MESSAGE	=	AIR FORCE COMMAND
AIR FORCE RETURN TRAY MESSAGE	=	AIR FORCE COMMAND
AIR FORCE STACKER TO ECS	=	AIR FORCE STATUS
	+	AIR FORCE SIDE
	+	AIR FORCE BAY
	+	AIR FORCE TIER
ALERT	=	[Z02 INTERNAL MESSAGE
	|	Z04 INTERNAL MESSAGE
	|	Z22 INTERNAL MESSAGE]
AMVE	=	SEQUENCE NUMBER
	+	CONTROL NUMBER
	+	SHIPMENT UNIT
	+	LOCATION
	+	DESTINATION
	+	SOURCE
	+	ALTERNATE DESTINATION
	+	SECOND ALTERNATE DESTINATION
	+	CHAIN STRUCTURE
	+	CONVEYANCE ID
	+	2ND CONVEYANCE ID
	+	HANDLING UNIT

	+	PRIORITY
	+	FLAG
	+	OPTION
	+	WORK TYPE
	+	PROGRAM CODE
	+	STATUS
	+	RECIRCULATION COUNT
	+	DATETIME STAMP
AREA	=	AREA CODE
	+	AREA FIRST EMPTY
	+	AREA LAST EMPTY
ASAQ	=	ASAQ SPAL ID
	+	ASAQ CATEGORY
	+	ASAQ DEST
	+	ASAQ TIMESTAMP
	+	ASAQ AISLE
	+	ASAQ AMVE CON NO
	+	GIVEN TO CRANE
	+	DEPOSIT BEGUN
	+	PRIORITY
	+	SUN
	+	SRC
	+	EMERGENCY
ASRS	=	ASRS ID
	+	ASRS CRANE ID
	+	ASRS SPAL ID
	+	ASRS CON NO
	+	ASRS MODE
	+	ASRS LOG STA
	+	ASRS PHY STA
	+	ASRS POLLING INTVL
	+	ASRS ERR POLLING INTVL
	+	ASRS SRC LOC
	+	ASRS INTR LOC
	+	ASRS DST LOC
	+	ASRS CUR LOC
	+	ASRS ERR
	+	ASRS TIMESTAMP
	+	ASRS IN OUT DEST
	+	ASRS IN OUT TYPE
	+	ASRS LOC INBOUND
	+	ASRS LOC OUTBOUND
	+	ASRS COMMAND CURR
	+	ASRS COMMAND NEXT

ASWQ	=	ASWQ SPAL ID
	+	ASWQ CATEGORY
	+	ASWQ DEST
	+	ASWQ TIMESTAMP
	+	ASWQ SUN
	+	ASWQ SRC
	+	ASWQ EMERGENCY
AWOS	=	AWOS CON NO
	+	AWOS WEIGHT
	+	AWOS TRANSMIT TIME
	+	AWOS RECEIVE TIME
	+	AWOS DEST1
	+	AWOS DEST2
	+	AWOS DEST3
	+	AWOS CUBE
	+	AWOS HEIGHT
	+	AWOS WIDTH
	+	AWOS LENGTH
AWOS HISTORY	=	HIST CON NO
	+	HIST WEIGHT
	+	HIST TRANSMIT TIME
	+	HIST RECEIVE TIME
	+	HIST DEST1
	+	HIST DEST2
	+	HIST DEST3
	+	HIST CUBE
	+	HIST HEIGHT
	+	HIST WIDTH
	+	HIST LENGTH
AWOS LANE	=	ALAN SUBCONTROLLER
	+	ALAN LANE ID
	+	ALAN FULL STATUS
	+	ALAN DIVERT
	+	ALAN IS REJECT
	+	ALAN IS 10LBS
AWOS TO DATABASE	=	[AWOS LANE
	|	AWOS
	|	AWOS HISTORY]
AWOS TO ECS	=	[REQUEST FOR LANE ASSIGNMENT
	|	LANE STATUS MESSAGE

	|	TRACY ARE YOU ALIVE MESSAGE
	|	TRACY CHANGE SCAN MODE MESSAGE]
AWOS TO LOG	=	[STANDARD LOG MESSAGE]
AWOS LOG MESSAGE	=	[STANDARD LOG MESSAGE]
AWOS TO TC	=	[ALERT
	|	UIR
	|	M02 STANDARD UP MESSAGE]
BIN NUMBER	=	BIN CHARACTER
	+	BIN NUMBER SETTING
CAROUSEL	=	CAROUSEL LOCATION ID
	+	CAROUSEL P/R IND
	+	CAROUSEL TOTE ID
	+	CAROUSEL E/O IND
	+	CAROUSEL CONSOLIDATION FLD
	+	CAROUSEL CN
CAROUSEL IN ERRORS RESPONSE	=	POWER CYCLES
	+	UNACKNOWLEDGED MESSAGES
	+	MESSAGE ERRORS
	+	COLLISIONS
	+	INVALID COMMANDS
	+	CAROUSEL WON'T MOVE ERROR
	+	POSITIONING ERROR
CAROUSEL IN POLLED RESPONSE	=	STATUS BYTE
CAROUSEL IN STATUS RESPONSE	=	AUTO MANUAL INDICATOR
	+	CAROUSEL STATUS
	+	CAROUSEL SIZE
	+	CURRENT POSITION 1ST STATION
	+	CURRENT POSITION 2ND STATION
	+	COAST CONSTANT
	+	NUMBER OF PULSES PER BIN

	+	ASYNC OR POLLED
CAROUSEL LOG MESSAGE	=	STANDARD LOG MESSAGE
CAROUSEL OUT GOTO MESSAGE	=	GOTO CHARACTER
	+	REQUESTED BIN NUMBER
CAROUSEL OUT HALT MESSAGE	=	HALT CHARACTER
CAROUSEL OUT JOG LEFT MESSAGE	=	JOG LEFT CHARACTERS
CAROUSEL OUT JOG RIGHT MESSAGE	=	JOG RIGHT CHARACTERS
CAROUSEL OUT LEFT ONE MESSAGE	=	LEFT ONE CHARACTER
CAROUSEL OUT POLLED SET 1 MESSAGE	=	POLLED 1 CHARACTER
CAROUSEL OUT POLLED SET 2 MESSAGE	=	POLLED 2 CHARACTER
CAROUSEL OUT POLLED SET 3 MESSAGE	=	POLLED 3 CHARACTER
CAROUSEL OUT POLLED SET 4 MESSAGE	=	POLLED 4 CHARACTER
CAROUSEL OUT POLLED SET 5 MESSAGE	=	POLLED 5 CHARACTER
CAROUSEL OUT POLLED SET MESSAGE	=	POLLED CHARACTER
CAROUSEL OUT RESTART MESSAGE	=	RESTART CHARACTER
CAROUSEL OUT RIGHT ONE MESSAGE	=	RIGHT ONE CHARACTER
CAROUSEL OUT SEND ERRORS MESSAGE	=	SEND ERRORS CHARACTERS
CAROUSEL OUT SEND STATUS MESSAGE	=	SEND STATUS CHARACTERS
CAROUSEL OUT SET BIN MESSAGE	=	BIN CHARACTER
	+	BIN NUMBER SETTING
CAROUSEL TO ECS	=	[CAROUSEL IN STATUS RESPONSE
	|	CAROUSEL IN ERRORS RESPONSE
	|	CAROUSEL IN POLLED RESPONSE]
CAROUSEL TO TC	=	[UAR
	|	UIR
	|	UMR

```
                                        |   ALERT
                                        |   SUBCONTROLLER UPDATE]

CART QUEUE                              =   CARQ TYPE

CART TYPE                               =   CART CART TY

CDB TO AGV                              =   [AGV
                                        |   AISLE
                                        |   AREA
                                        |   MODULE
                                        |   STAND
                                        |   TRAN]

CDB TO A-B PLCS                         =   [MODULE
                                        |   MOVE
                                        |   TOTE]

CDB TO CSF                              =   [CONV
                                        |   LOAD
                                        |   STKR
                                        |   SECT
                                        |   ZONE]

CDB TO ECS                              =   [AGV
                                        |   AREA
                                        |   CHAIN
                                        |   CHUTE
                                        |   CONSOLIDATION
                                        |   CONVEYANCE
                                        |   CAROUSEL
                                        |   EMPTY PAL LOC
                                        |   FUNCTION
                                        |   MODULE
                                        |   MOVE
                                        |   PLC NUMBER
                                        |   PLCS
                                        |   STAND
                                        |   SYS INF
                                        |   SYSTEM INF
                                        |   TOTE
                                        |   TRAN
                                        |   WAREHOUSE
                                        |   WORKSTATION]
CDB TO HP                               =   [AGV
                                        |   AISLE
                                        |   AREA
```

```
                                        |   CAROUSEL
                                        |   CHAIN
                                        |   CONSOLIDATION
                                        |   MODULE
                                        |   MOVE
                                        |   STAND
                                        |   TOTE
                                        |   TRAN
                                        |   SYSTEM]

CDB TO SMN                              =   [ASAQ
                                        |   ASRS
                                        |   ASWQ
                                        |   SPAL
                                        |   WKS2]

CDB TO TOWLINE                          =   [CART QUEUE
                                        |   CART TYPE
                                        |   CHAIN
                                        |   CONFIGURATION
                                        |   CONVEYANCE
                                        |   DEPOT AREA
                                        |   FROM/TO
                                        |   FUNCTION
                                        |   MOVE
                                        |   PLC NUMBER
                                        |   SYSTEM INF
                                        |   WAREHOUSE
                                        |   WORKSTATION]

CDB TO TRIAX                            =   [ASRS
                                        |   CONV
                                        |   MOVE
                                        |   QUES
                                        |   SPAL
                                        |   WKST]

CDB TO Y109                             =   [AMVE
                                        |   LANE]

CHAIN                                   =   CHAIN ID
                                        +   CHAIN NUMBER IN
                                        +   8(CHAIN CONV)
                                        +   CHAIN NO ARRIVED
                                        +   CHAIN REL INDIC
                                        +   CHAIN SPUR ID
```

CHUTE	=	CHUTE PACK AREA
	+	CHUTE ID3
	+	CHUTE TOTAL PKG
	+	CHUTE TYPE
CICS DELAY COMMAND	=	CICS DELAY COMMAND STRING
	+	CICS DELAY TIME
CICS P195 PARAMETER RECORD	=	CICS P195 PARAMETER ID CODE
	+	CICS P195 ECS ACTIVE FLAG
CICS SESSION ERROR MESSAGE	=	CICS SESSION ERROR STRING
CICS START COMMAND	=	CICS START COMMAND STRING
	+	CICS START NAME
COMPONENT	=	DEVICE ID
	+	READ TOTAL
	+	READ TOTAL
CONFIGURATION	=	CONFIG MHE TYPE
	+	CONFIG ZONE NUM
	+	CONFIG SUBZONE NUM
	+	CONFIG CONFIGURATION
	+	CONFIG DATE
	+	CONFIG TIME
CONSOLIDATION	=	CONSOLIDATION FLD
	+	CONSOLIDATION DTE
	+	CONSOLIDATION NUMBER IN
CONV	=	[CONV_STAT
	+	CONV_TRAN_NR_FR_ID
	+	CONV_TRAN_NR_TO_ID
	+	CONV_TRACKING_USER]
	|	[CONV KEY
	+	CONV_STATUS]
CONVEYANCE	=	CONV CONVEY ID
	+	CONV AREA
	+	CONV CHAIN ID
	+	CONV CON NO

```
                                    +   CONV CONVEY TY
                                    +   CONV FNL DEST
                                    +   CONV NEXT DEST
                                    +   CONV PRES LOC
                                    +   CONV STA
                                    +   CONV CTYP

CSF LOCATION                        =   CURRENT BAY POSITION
                                    +   DESTINATION LEVEL
                                    +   DESTINATION SIDE

CSF LOG MESSAGE                     =   STANDARD LOG MESSAGE

CSF TO CDB                          =   [CONV
                                    |   LOAD
                                    |   SECT
                                    |   STKR
                                    |   WKST
                                    |   ZONE]

CSF TO LOG                          =   [CSF TO TC
                                    |   TC TO CSF
                                    |   STANDARD LOG MESSAGE]

CSF TO PLC                          =   [HANDSHAKE MSG
                                    |   HOST TO S/RM COMM MSG
                                    |   HOST TO S/RM KILL MSG
                                    |   TRACKING MOVE MSG
                                    |   TRACKING READ REQUEST
                                        MSG
                                    |   TRACKING UPDATE MSG
                                    |   STATUS UPDATE MSG
                                    |   SECTION START/STOP MSG
                                    |   P&D STATUS MSG]

CSF TO TC                           =   [UIR
                                    |   USR
                                    |   ALERT]

DATABASE TO AWOS                    =   [AWOS LANE
                                    |   AWOS
                                    |   AWOS HISTORY]

DATABASE TO KEYPAD                  =   [CART QUEUE
                                    |   CART TYPE
                                    |   CHAIN
                                    |   CONVEYANCE
```

```
                                        |   FUNCTION
                                        |   MOVE
                                        |   SYSTEM INF
                                        |   WAREHOUSE
                                        |   WORKSTATION]

DATABASE TO PALLET                      =   [CART TYPE
                                        |   CONVEYANCE
                                        |   MOVE
                                        |   SYSTEM INF
                                        |   WORKSTATION]

DATABASE TO SORTER                      =   [CHUTE
                                        |   MOVE
                                        |   PLCS]

DATABASE TO SORTER DDJC                 =   [MOVE]

DATABASE TO TOTE                        =   [CHAIN
                                        |   CONVEYANCE
                                        |   MOVE
                                        |   PLC NUMBER
                                        |   SYSTEM INF
                                        |   WORKSTATION]

DATABASE TO UI                          =   [AWOS
                                        |   AWOS HISTORY
                                        |   AWOS LANE
                                        |   CART QUEUE
                                        |   CART TYPE
                                        |   CHAIN
                                        |   CHUTE
                                        |   CONVEYANCE
                                        |   MOVE
                                        |   PLC NUMBER
                                        |   SYSTEM INF
                                        |   WAREHOUSE
                                        |   WORKSTATION]

DDDE PACKAGE CONVEYOR SYSTEM DAWS MESSAGE
                                        =   [MESSAGE TYPE
                                        +   AWOS LENGTH
                                        +   AWOS WIDTH
                                        +   AWOS HEIGHT
                                        +   AWOS LENGTH
                                        +   AWOS CON NO]
```

```
DDDE PACKAGE CONVEYOR SYSTEM DESTINATION MESSAGE
                                        =   [MESSAGE TYPE
                                        +   DPI SCANNER ID
                                        +   DPI DIVERT
                                        +   DPI BARCODE]

DDDE PACKAGE CONVEYOR SYSTEM SCANNER MESSAGE
                                        =   [MESSAGE TYPE
                                        +   DPI SCANNER ID
                                        +   DPI BARCODE]

DDDE PACKAGE CONVEYOR SYSTEM TO ECS =       [DDDE PACKAGE
                                            CONCEYOR SYSTEM DAWS
                                            MESSAGE
                                        |   DDDE PACKAGE
                                            CONVEYOR SYSTEM
                                            SCANNER MESSAGE]

DDDE PCS TO DATABASE                    =   [AWOS TO DATABASE
                                        |   NORFOLK VIRGINIA DPI
                                            TOTE TO DATABASE]

DDDE PCS TO LOG                         =   [AWOS TO LOG
                                        |   STANDARD LOG MESSAGE]

DDDE PCS TO TC                          =   [AWOS TO TC]

DEPOT AREA                              =   DCAR AREA

DEVICE DESIGNATOR                       =   DEVICE TYPE
                                        +   DEVICE NUMBER

DISCRETE TRANSITION MSG                 =   PREAMBLE
                                        +   HARDWARE PLC NUMBER
                                        +   COMMAND TYPE
                                        +   TRAN ID
                                        +   CURRENT ZONE NUMBER
                                        +   DISCRETE TRANSITION
                                        +   CHECKSUM
                                        +   POSTAMBLE

DSS TO ECS                              =   [SMM]

ECS INTERNAL MESSAGE                    =   ADDRESS-TO
                                        +   ADDRESS-FROM
                                        +   MESSAGE LENGTH
                                        +   INTERNAL MESSAGE
```

ECS TO A-B PLCS	=	A-B PLCS BIN PACKING MOVE
	|	A-B PLCS LTL PACKING MULTIPLE PALLET MOVE
	|	A-B PLCS LTL PACKING SINGLE PALLET MOVE
	|	A-B PLCS RECEIVING MULTIPLE TOTE MOVE
	|	A-B PLCS RECEIVING SINGLE TOTE MOVE
ECS TO AGV	=	[H01 PICKUP AND DELIVERY
	|	H02 REROUTE TRANSACTION
	|	H03 AGV INQUIRY TRANSACTION
	|	H04 STAND INQUIRY TRANSACTION
	|	H05 RESUME COMMUNICATIONS REQUEST
	|	H06 END OF TRANSMISSION FLAG
	|	H07 POWER FAILURE ACKNOWLEDGEMENT]
ECS TO AIC	=	[ECS TO ACTIVE ITEM CONVEYOR]
ECS TO AIR FORCE STACKER	=	[AIR FORCE DELIVER TRAY MESSAGE
	|	AIR FORCE ALERT ON MESSAGE
	|	AIR FORCE ALERT OFF MESSAGE
	|	AIR FORCE RESET MESSAGE
	|	AIR FORCE RETURN TRAY MESSAGE]
ECS TO AWOS	=	[LANE ASSIGNMENT MESSAGE
	|	START/STOP CONVEYOR MESSAGE
	|	TRACY ARE YOU ALIVE MESSAGE]

```
ECS TO CAROUSEL          =   [CAROUSEL OUT HALT MESSAGE
                             | CAROUSEL OUT GOTO MESSAGE
                             | CAROUSEL OUT JOG LEFT
                               MESSAGE
                             | CAROUSEL OUT JOG RIGHT
                               MESSAGE
                             | CAROUSEL OUT LEFT ONE
                               MESSAGE
                             | CAROUSEL OUT RIGHT ONE
                               MESSAGE
                             | CAROUSEL OUT SET BIN
                               MESSAGE
                             | CAROUSEL OUT SEND
                               STATUS MESSAGE
                             | CAROUSEL OUT SEND
                               ERRORS MESSAGE
                             | CAROUSEL OUT POLLED
                               SET MESSAGE
                             | CAROUSEL OUT POLLED
                               SET 1 MESSAGE
                             | CAROUSEL OUT POLLED
                               SET 2 MESSAGE
                             | CAROUSEL OUT POLLED
                               SET 3 MESSAGE
                             | CAROUSEL OUT POLLED
                               SET 4 MESSAGE
                             | CAROUSEL OUT POLLED
                               SET 5 MESSAGE
                             | CAROUSEL OUT RESTART
                               MESSAGE]

ECS TO CDB               =   [AGV
                             | AWOS
                             | AWOS LANE
                             | AWOS HISTORY
                             | AREA
                             | CHAIN
                             | CHUTE
                             | CONSOLIDATION
                             | CONVEYANCE
                             | CAROUSEL
                             | EMPTY PAL LOC
                             | FUNCTION
                             | MODULE
                             | MOVE
                             | PLC NUMBER
```

| PLCS
| STAND
| SYS INF
| SYSTEM INF
| TOTE
| TRAN
| WAREHOUSE
| WORKSTATION]

ECS TO DDDE PACKAGE CONVEYOR DESTINATION
= DDDE PACKAGE CONVEYOR SYSTEM DESTINATION MESSAGE

ECS TO DSS = [DSS SIZING SCREENS
| M02 STANDARD UP MESSAGE]

ECS TO KEYPAD = [ALERT
| SUBCONTROLLER UPDATE]

ECS TO HP = [HP OUT LOCATION INQUIRY
| HP OUT TOTE INQUIRY
| HP OUT TOTE IN TRAFFIC INQUIRY
| HP OUT TOTE ROUTING
| HP OUT TOTE RELEASE
| HP OUT EMPTY TOTE NOTIFICATION]
| HP OUT MULTIPLE TOTE ROUTING]

ECS TO NAVY STACKER = [NAVY STACKER RETRIEVE RIGHT
| NAVY STACKER RETRIEVE LEFT
| NAVY STACKER RESTORE RIGHT
| NAVY STACKER RESTORE LEFT]

ECS TO NLSC = [NLSC OUT STARTUP MESSAGE
| NLSC OUT INITIALIZE MESSAGE

	|	NLSC OUT DESTINATION ASSIGN MESSAGE
	|	NLSC OUT DELETE DESTINATION MESSAGE
	|	NLSC OUT LANE RELEASE MESSAGE
	|	NLSC OUT DATA DUMP REQUEST MESSAGE
	|	NLSC OUT VERIFY STATUS MESSAGE]
ECS TO NMC	=	[NMC OUT WORKSTATION ASSIGN MSG
	|	NMC OUT TRAY REQUEST MESSAGE
	|	NMC OUT TRAY CANCELLATION MESSAGE
	|	NMC OUT WORKSTATION TRAY RELEASE MESSAGE
	|	NMC OUT NCC RESTART MESSAGE
	|	NMC OUT CONFIGURATION PARM MESSAGE
	|	NMC OUT REQUEST STATISTICS MESSAGE
	|	NMC OUT CLEAR STATISTICS MESSAGE
	|	NMC OUT INITIALIZE MESSAGE]
ECS TO PALLET	=	[08 CSC STATUS (STARTUP/SHUTDOWN)
	|	12 NEW PALLET MOVE]
ECS TO RAYMOND CAROUSEL	=	[RAYMOND OUT CLEAR
	|	RAYMOND OUT GOTO
	|	RAYMOND OUT HOME
	|	RAYMOND OUT POLL1
	|	RAYMOND OUT POLL2
	|	RAYMOND OUT POLL3
	|	RAYMOND OUT POLL4
	|	RAYMOND OUT RESET
	|	RAYMOND OUT STOP
ECS TO SORTER	=	[01 CHUTE DESTINATION
	|	04 STATUS MESSAGE

```
                                        |   06 PRODUCT FILE TABLE
                                            DOWNLOAD COMPLETE
                                        |   07 STATUS INQUIRY
                                        |   ACK
                                        |   NAK]

ECS TO SORTER DDJC                      =   [MOVE]

ECS TO STACKER                          =   [ECS TO NMC
                                        |   ECS TO AIR FORCE
                                            STACKER
                                        |   ECS TO NAVY STACKER
                                        |   SMN TO PLC]

ECS TO TOTE                             =   [01 NEW TOTE MOVE
                                        |   02 MODIFY DESTINATION
                                        |   04 STATION
                                            ENABLE/DISABLE
                                        |   06 UNLOCK WORKSTATION
                                        |   07 SET WORKSTATION TYPE
                                        |   08 CSC STATUS
                                            (STARTUP/SHUTDOWN)]

ECS TO TOWLINE                          =   [03 CART DESTINATION
                                        |   06 TOWLINE SYSTEM
                                            CONTROLLER STATUS
                                            AND UPLOAD COMMAND
                                        |   09 ABORT CHAIN
                                        |   12 REQUEST CART
                                            INFORMATION
                                        |   14 UNLOCK WORKSTATION]

ECS TO USER                             =   [UAR
                                        |   UIR
                                        |   UMR
                                        |   ALERT
                                        |   SUBCONTROLLER UPDATE]

EMPTY CART MESSAGE                      =   CART ID5
                                        +   CART TYPE
                                        +   SOURCE4

EMPTY PAL LOC                           =   EPLO WRHS LOC

ERROR MESSAGES                          =   ERROR TEXT

FAULT MSG                               =   PREAMBLE
```

	+	HARDWARE PLC NUMBER
	+	COMMAND TYPE
	+	TRAN ID
	+	CURRENT ZONE NUMBER
	+	FAULT CODE
	+	CHECKSUM
	+	POSTAMBLE
FROM/TO	=	SOURCE4
	+	DESTINATION
FUNCTION	=	FUNC WKAREA
	+	FUNC TYPE
	+	FUNC CUR DEST
	+	FUNC DFLT DEST
	+	FUNC PLC NO
GENERIC INTERNAL MESSAGE	=	[A01 INTERNAL MESSAGE
	|	A03 INTERNAL MESSAGE
	|	A05 INTERNAL MESSAGE
	|	A07 INTERNAL MESSAGE
	|	A09 INTERNAL MESSAGE
	|	A99 INTERNAL MESSAGE
	|	M01 INTERNAL MESSAGE
	|	N02 INTERNAL MESSAGE
	|	J01 INTERNAL MESSAGE
	|	K02 INTERNAL MESSAGE
	|	Z02 INTERNAL MESSAGE
	|	Z04 INTERNAL MESSAGE
HANDSHAKE MSG	=	PREAMBLE
	+	HARDWARE PLC NUMBER
	+	COMMAND TYPE
	+	POSTAMBLE
H01 PICKUP AND DELIVERY	=	MESSAGE ID
	+	TRANS ID
	+	TRANS SRC AREA
	+	TRANS SRC P&D
	+	TRANS DEST AREA
	+	TRANS DEST P&D
	+	TRANS MODULE/PALLET IND
	+	TRANS PRIORITY
H02 REROUTE TRANSACTION	=	MESSAGE ID
	+	TRANS ID

	+	TRANS DEST P&D
	+	TRANS AGV ID
H03 AGV INQUIRY TRANSACTION	=	MESSAGE ID
	+	TRANS ID
	+	TRANS AGV ID
H04 STAND INQUIRY TRANSACTION	=	MESSAGE ID
	+	TRANS ID
	+	2(STAND ID)
H05 RESUME COMMUNICATIONS REQUEST	=	MESSAGE ID
H06 END OF TRANSMISSION FLAG	=	MESSAGE ID
H07 POWER FAILURE ACKNOWLEDGEMENT	=	MESSAGE ID
HOST TO S/RM COMM MSG	=	PREAMBLE
	+	HARDWARE PLC NUMBER
	+	COMMAND TYPE
	+	TRAN ID
	+	LOAD TYPE
	+	SOURCE P&D
	+	SOURCE BAY
	+	SOURCE LEVEL
	+	SOURCE SIDE
	+	DESTINATION P&D
	+	DESTINATION BAY
	+	DESTINATION LEVEL
	+	DESTINATION SIDE
	+	CHECKSUM
	+	POSTAMBLE
HOST TO S/RM KILL MSG	=	PREAMBLE
	+	HARDWARE PLC NUMBER
	+	COMMAND TYPE
	+	TRAN ID
	+	CHECKSUM
	+	POSTAMBLE
HP IN LOCATION INQUIRY RESPONSE	=	MESSAGE TYPE
	+	CAROUSEL NO.
	+	SEGMENT+TIER
	+	P/R INDICATOR
	+	TOTE NO.
	+	E/O INDICATOR

HP IN TOTE IN TRAFFIC INQUIRY RESPONSE	=	MESSAGE TYPE
	+	TOTE NO.
	+	ROUTE
	+	STAND NO. DESTINATION
HP IN TOTE INQUIRY RESPONSE	=	MESSAGE TYPE
	+	TOTE NO.
	+	CAROUSEL LOCATION
	+	P/R INDICATOR
HP IN TOTE STOW CONFIRMATION	=	TOTE NO.
	+	CAROUSEL NO.
	+	SEGMENT
	+	TIER
HP IN WORK ARRIVAL	=	MESSAGE TYPE
	+	TOTE NO.
	+	WORKSTATION ID
HP OUT EMPTY TOTE NOTIFICATION	=	MESSAGE TYPE
	+	TOTE NO.
HP OUT LOCATION INQUIRY	=	MESSAGE TYPE
	+	CAROUSEL NO.
	+	SEGMENT
	+	TIER
HP OUT MULTIPLE TOTE ROUTING	=	MESSAGE TYPE
	+	10{TOTE NO.
	+	CAROUSEL NO.
	+	SEGMENT
	+	TIER}10
HP OUT TOTE IN TRAFFIC INQUIRY	=	MESSAGE TYPE
	+	TOTE NO.
HP OUT TOTE INQUIRY	=	MESSAGE TYPE
	+	TOTE NO.
HP OUT TOTE RELEASE	=	MESSAGE TYPE
	+	TOTE NO.
	+	CAROUSEL NO.
	+	SEGMENT
	+	TIER
	+	STAND NO. DESTINATION
HP OUT TOTE ROUTING	=	MESSAGE TYPE

```
                                    +   TOTE NO.
                                    +   SRC
                                    +   STAND NO.  DESTINATION

HP TO CDB                           =   [AGV
                                    |   AISLE
                                    |   AREA
                                    |   CAROUSEL
                                    |   CHAIN
                                    |   CONSOLIDATION
                                    |   MODULE
                                    |   MOVE
                                    |   STAND
                                    |   TOTE
                                    |   TRAN
                                    |   SYSTEM]

HP TO ECS                           =   [HP IN LOCATION INQUIRY
                                        RESPONSE
                                    |   HP IN TOTE INQUIRY
                                        RESPONSE
                                    |   HP IN TOTE INQUIRY
                                        RESPONSE
                                    |   HP IN TOTE IN TRAFFIC
                                        INQUIRY RESPONSE
                                    |   HP IN TOTE IN TRAFFIC
                                        INQUIRY RESPONSE
                                    |   HP IN TOTE STOW
                                        CONFIRMATION
                                    |   HP IN TOTE STOW
                                        CONFIRMATION
                                    |   HP IN WORK ARRIVAL]
                                    |   HP IN WORK ARRIVAL]

HP TO TC                            =   [HP IN LOCATION INQUIRY
                                        RESPONSE
                                    |   HP IN TOTE INQUIRY
                                        RESPONSE
                                    |   HP IN TOTE INQUIRY
                                        RESPONSE
                                    |   HP IN TOTE IN TRAFFIC
                                        INQUIRY RESPONSE
                                    |   HP IN TOTE IN TRAFFIC
                                        INQUIRY RESPONSE
                                    |   HP IN TOTE STOW
                                        CONFIRMATION
```

	|	HP IN TOTE STOW CONFIRMATION
	|	HP IN WORK ARRIVAL]
	|	HP IN WORK ARRIVAL]
INTERNAL MESSAGE	=	INTERNAL MESSAGE ID
	+	MESSAGE BODY
INTERNAL MESSAGE ID	=	MESSAGE TYPE CODE
	+	MESSAGE NUMBER
INTERNAL MESSAGE TYPES	=	[GENERIC INTERNAL MESSAGE
	|	RESTRICTED INTERNAL MESSAGE]
J01 INTERNAL MESSAGE	=	MESSAGE ID
J31 INTERNAL MESSAGE	=	MESSAGE ID
	+	DEVICE
J33 INTERNAL MESSAGE	=	MESSAGE ID
	+	DEVICE
J41 INTERNAL MESSAGE	=	MESSAGE ID
	+	SOURCE
J51 INTERNAL MESSAGE	=	MESSAGE ID
	+	CAROUSEL LOCATION
J53 INTERNAL MESSAGE	=	MESSAGE ID
	+	TOTE ID
J55 INTERNAL MESSAGE	=	MESSAGE ID
	+	TOTE ID
J61 INTERNAL MESSAGE	=	MESSAGE ID
	+	AGV ID
J63 INTERNAL MESSAGE	=	MESSAGE ID
	+	STAND ID
J71 INTERNAL MESSAGE	=	MESSAGE ID
	+	TOTE ID
J73 INTERNAL MESSAGE	=	MESSAGE ID
	+	WKST SPUR

	+	CHANGE IND
J75 INTERNAL MESSAGE	=	MESSAGE ID
	+	WKST SPUR
	+	TYPE
J77 INTERNAL MESSAGE	=	MESSAGE ID
	+	CONTROL NUMBER
	+	WKST SPUR
	+	OUTPUT LANE
J79 INTERNAL MESSAGE	=	MESSAGE ID
	+	CART ID
J81 INTERNAL MESSAGE	=	MESSAGE ID
	+	CART ID
	+	CART TYPE
J83 INTERNAL MESSAGE	=	MESSAGE ID
	+	WKST SPUR
J85 INTERNAL MESSAGE	=	MESSAGE ID
	+	12(PRIORITY)
J87 INTERNAL MESSAGE	=	MESSAGE ID
	+	10[WHSE DROP PT
	+	10(WHSE NUMBER)]
J89 INTERNAL MESSAGE	=	MESSAGE ID
	+	NEW MODE
J91 INTERNAL MESSAGE	=	MESSAGE ID
	+	CHAIN SPUR ID
J93 INTERNAL MESSAGE	=	MESSAGE ID
	+	CART ID
	+	WKST SPUR
	+	FLAG
J95 INTERNAL MESSAGE	=	MESSAGE ID
	+	CART ID
	+	FLAG
J97 INTERNAL MESSAGE	=	MESSAGE ID
	+	10(COUNT
	+	ENROUTE
	+	UNLOCK)

```
KEYPAD LOG MESSAGE          =  [KEYPAD TO TC
                            |  TC TO KEYPAD
                            +  STANDARD LOG MESSAGE]

KEYPAD TO DATABASE          =  [CART QUEUE
                            |  CART TYPE
                            |  CHAIN
                            |  CONVEYANCE
                            |  FUNCTION
                            |  MOVE
                            |  WAREHOUSE
                            |  WORKSTATION]

KEYPAD TO ECS               =  [M01 INTERNAL MESSAGE]

KEYPAD TO LOG               =  [STANDARD LOG MESSAGE]

KEYPAD TO TC                =  [M01 INTERNAL MESSAGE
                            |  ALERT
                            |  SUBCONTROLLER UPDATE]

K02 INTERNAL MESSAGE        =  MESSAGE ID
                            +  STATUS TEXT

K24 INTERNAL MESSAGE        =  MESSAGE ID
                            +  CONTROL NUMBER
                            +  ELAPSED TIME

K32 INTERNAL MESSAGE        =  MESSAGE ID
                            +  ERRORS

K34 INTERNAL MESSAGE        =  MESSAGE ID
                            +  STATUS

K42 INTERNAL MESSAGE        =  MESSAGE ID
                            +  NMC TRAY ID

K52 INTERNAL MESSAGE        =  MESSAGE ID
                            +  CAROUSEL LOCATION
                            +  TOTE ID
                            +  E/O INDICATOR

K54 INTERNAL MESSAGE        =  MESSAGE ID
                            +  TOTE ID
                            +  CAROUSEL LOCATION
                            +  P/R INDICATOR
```

K56 INTERNAL MESSAGE	=	MESSAGE ID
	+	TOTE ID
	+	ROUTE
	+	STAND ID
	+	TOTE DESTINATION
K62 INTERNAL MESSAGE	=	MESSAGE ID
	+	AGV ID
	+	AGV STATUS
	+	TRAN ID
K64 INTERNAL MESSAGE	=	MESSAGE ID
	+	STAND ID
	+	STAND STATUS
	+	TRAN ID
LANE ASSIGNMENT MESSAGE	=	[MECHANICSBURG LANE ASSIGNMENT
	|	NEW CUMBERLAND LANE ASSIGNMENT
	|	NORFOLK LANE ASSIGNMENT
	|	TRACY LANE ASSIGNMENT]
LANE STATUS MESSAGE	=	LANE STATUS BITMAP
L01 AGV RETURN TO SERVICE	=	MESSAGE ID
	+	AGV ID
L02 AGV OUT OF SERVICE	=	MESSAGE ID
	+	AGV ID
	+	FAULT DEST
L03 AGV INQUIRY RESPONSE	=	MESSAGE ID
	+	TRAN ID
	+	AGV ID
	+	AGV STATUS
L04 STAND INQUIRY RESPONSE	=	MESSAGE ID
	+	TRAN ID
	+	2(STAND ID
	+	STAND STATUS)
L05 PICKUP/DELIVERY CONFIRMATION	=	MESSAGE ID
	+	TRAN ID
	+	STAND ID

L06 END OF QUEUED TRANSACTIONS FLAG	=	MESSAGE ID
L98 ACKNOWLEDGEMENT MESSAGE	=	MESSAGE ID
L99 ERROR TRANSACTION	=	MESSAGE ID
	+	TRAN ID
	+	TRAN STATUS
	+	AGV NUM/STATUS
	+	ERR LOCATION
LOAD	=	LOAD_ID
	+	LOAD_TRAN_ID
	+	LOAD_SRC_LOC
	+	LOAD_INTR_LOC
	+	LOAD_DST_LOC
	+	LOAD_CUR_LOC
	+	LOAD_ERR
	+	LOAD_TIMESTAMP
MECHANICSBURG LANE ASSIGNMENT	=	PLC ADDRESS
	+	PLC NUMBER
	+	LANE ID3
M01 INTERNAL MESSAGE	=	SMM
M02 INTERNAL MESSAGE	=	MESSAGE ID
	+	CONTROL NUMBER
	+	WEIGHT
	+	CUBE
	+	PACKAGE HEIGHT
	+	PACKAGE LENGTH
	+	PACKAGE WIDTH
	+	DESTINATION3
	+	SOURCE8
	+	CONVEYANCE ID
	+	FLAG
	+	WORK TYPE
	+	OPTION
	+	PROGRAM
	+	CAROUSEL LOCATION
	+	STAND ID
	+	STAND STATUS
	+	STAND ENABLED FLAG
	+	STAND AREA
	+	MODULE ID
	+	MODULE STATUS
	+	MODULE DEST AREA CODE

```
                                    +   MODULE DEST STND ID
                                    +   MODULE FNL AREA CODE
                                    +   MODULE FNL STND ID

MODULE                              =   MODULE DEST AREA CODE
                                    +   MODULE DEST STND ID
                                    +   MODULE FNL AREA CODE
                                    +   MODULE FNL STND ID
                                    +   MODULE STATUS
                                    +   MODULE AGVS ID
                                    +   MODULE PREV EMPTY
                                    +   MODULE NEXT EMPTY
                                    +   MODULE PREV LOADED
                                    +   MODULE NEXT LOADED
                                    +   MODULE PREV PEND
                                    +   MODULE NEXT PEND

MOVE                                =   [MOVE CON NO
                                    +   MOVE CON FLD
                                    +   MOVE CHUTE ID
                                    +   MOVE CHUTE IND
                                    +   MOVE CONVEY ID
                                    +   MOVE DEST
                                    +   MOVE FLAG
                                    +   MOVE SRC
                                    +   MOVE STA
                                    +   MOVE RECIRC COUNT
                                    +   MOVE DATE
                                    +   MOVE PKG STATUS
                                    +   MOVE CHUTE PACK AREA]
                                    |   [MOVE CON NO
                                    +   MOVE LOCATION
                                    +   MOVE DESTINATION
                                    +   MOVE SOURCE
                                    +   MOVE SPAL ID
                                    +   MOVE PRIORITY
                                    +   MOVE WORK TYPE
                                    +   MOVE OPTION
                                    +   MOVE PROGRAM ID
                                    +   MOVE TIMESTAMP]

MOVE CART                           =   CART ID5
                                    +   CONTROL NUMBER

MOVE TOTE                           =   TOTE ID
                                    +   CONTROL NUMBER
```

NAVY IN MESSAGE	=	NAVY MESSAGE TYPE
	+	NAVY STATUS CODE
	+	NAVY DIAGNOSTIC CODE
NAVY OUT MESSAGE	=	NAVY MESSAGE TYPE
	+	NAVY FACE NUMBER
	+	NAVY VERTICAL LOCATION
	+	NAVY HORIZONTAL LOCATION
NAVY STACKER ARRIVE LEFT	=	NAVY OUT MESSAGE
NAVY STACKER ARRIVE RIGHT	=	NAVY OUT MESSAGE
NAVY STACKER RESTORE LEFT	=	NAVY OUT MESSAGE
NAVY STACKER RESTORE RIGHT	=	NAVY OUT MESSAGE
NAVY STACKER RETRIEVE LEFT	=	NAVY OUT MESSAGE
NAVY STACKER RETRIEVE RIGHT	=	NAVY OUT MESSAGE
NAVY STACKER TO ECS	=	[NAVY STACKER STATUS
	|	NAVY STACKER ARRIVE LEFT
	|	NAVY STACKER ARRIVE RIGHT]
NEW CUMBERLAND LANE ASSIGNMENT	=	LANE ID2
NLSC IN DATA DUMP RESPONSE MESSAGE	=	MESSAGE TYPE
	+	CONTROL NUMBER
	+	ELAPSED TIME
NLSC IN DELETION MESSAGE	=	MESSAGE TYPE
	+	CONTROL NUMBER
NLSC IN DIVERT MESSAGE	=	MESSAGE TYPE
	+	CONTROL NUMBER
	+	DESTINATION
NLSC IN ID RESPONSE MESSAGE	=	MESSAGE TYPE
	+	PRIMARY SECONDARY FLAG
	+	UNIT NUMBER
NLSC IN INVALID DATA MESSAGE	=	MESSAGE TYPE

```
                                        +   NLSC SOURCE
                                        +   INVALID DATA

NLSC IN STATUS MESSAGE                  =   MESSAGE TYPE
                                        +   STATUS CODE
                                        +   EQUIPMENT ID
                                        +   EQUIPMENT TYPE
                                        +   EQUIPMENT TYPE

NLSC LOG MESSAGE                        =   STANDARD LOG MESSAGE

NLSC OUT DATA DUMP REQUEST MESSAGE      =   MESSAGE TYPE

NLSC OUT DELETE DESTINATION MESSAGE     =   MESSAGE TYPE
                                        +   CONTROL NUMBER

NLSC OUT DESTINATION ASSIGN MESSAGE     =   MESSAGE TYPE
                                        +   CONTROL NUMBER
                                        +   DESTINATION
                                        +   SECONDARY DESTINATION

NLSC OUT INITIALIZE MESSAGE             =   MESSAGE TYPE

NLSC OUT LANE RELEASE MESSAGE           =   MESSAGE TYPE
                                        +   LANE ID

NLSC OUT STARTUP MESSAGE                =   MESSAGE TYPE

NLSC OUT VERIFY STATUS MESSAGE          =   MESSAGE TYPE

NLSC TO ECS                             =   [NLSC IN DELETION
                                            MESSAGE
                                        |   NLSC IN DIVERT MESSAGE
                                        |   NLSC IN STATUS MESSAGE
                                        |   NLSC IN STATUS REVERSE
                                            MESSAGE
                                        |   NLSC IN DATA DUMP
                                            RESPONSE MESSAGE
                                        |   NLSC IN INVALID DATA
                                            MESSAGE
                                        |   NLSC IN ID RESPONSE
                                            MESSAGE]

NLSC TO TC                              =   [UAR
                                        |   UIR
                                        |   UMR
                                        |   ALERT
```

	|	SUBCONTROLLER UPDATE]
NMC IN OPERATIONAL STATUS MESSAGE	=	MESSAGE TYPE
	+	PRIMARY PC
	+	BACKUP AVAILABLE FLAG
	+	STATUS MESSAGE FLAG
	+	CRANE STATE
	+	EQUIPMENT STATUS
NMC IN REPORT STATISTICS MESSAGE	=	MESSAGE TYPE
	+	STATISTICS
NMC IN SYSTEM RESTART MESSAGE	=	MESSAGE TYPE
NMC IN TRAY ARRIVAL MESSAGE	=	MESSAGE TYPE
	+	FACE
	+	VERTICAL POSITION
	+	HORIZONTAL POSITION
NMC IN TRAY ARRIVAL QUE MESSAGE	=	MESSAGE TYPE
	+	FACE
	+	VERTICAL POSITION
	+	HORIZONTAL POSITION
NMC IN TRAY REJECT MESSAGE	=	MESSAGE TYPE
	+	FACE
	+	VERTICAL POSITION
	+	HORIZONTAL POSITION
	+	REJECT REASON CODE
NMC IN TRAY TRANS REQUIRE MESSAGE	=	MESSAGE TYPE
	+	WORKSTATION OR FUNCTION
	+	TRAYS PROCESSED
NMC OUT CLEAR STATISTICS MESSAGE	=	MESSAGE TYPE
NMC OUT CONFIGURATION PARM MESSAGE	=	MESSAGE TYPE
	+	PRIMARY PC
	+	MIX RATIO
NMC OUT INITIALIZE MESSAGE	=	MESSAGE TYPE
NMC OUT NCC RESTART MESSAGE	=	MESSAGE TYPE
NMC OUT REQUEST STATISTICS MESSAGE	=	MESSAGE TYPE

NMC OUT TRAY CANCELLATION MESSAGE	=	MESSAGE TYPE
	+	FACE
	+	VERTICAL POSITION
	+	HORIZONTAL POSITION
	+	WORKSTATION OR FUNCTION
NMC OUT TRAY REQUEST MESSAGE	=	MESSAGE TYPE
	+	FACE
	+	VERTICAL POSITION
	+	HORIZONTAL POSITION
	+	WORKSTATION OR FUNCTION
	+	PRIORITY
	+	NMC WEIGHT
NMC OUT WORKSTATION ASSIGN MSG	=	MESSAGE TYPE
	+	WORKSTATION NUMBER
	+	ACTIVE FLAG
	+	DIVERT FLAG
	+	FUNCTION FLAGS
N02 INTERNAL MESSAGE	=	MESSAGE TYPE
	+	CONTROL NUMBER
	+	LOCATION
	+	DESTINATION9
NMC OUT WORKSTATION TRAY RELEASE MESSAGE		
	=	MESSAGE TYPE
	+	WORKSTATION NUMBER
	+	FUNCTION CODE BITS
	+	TRAY OR WORKSTATION INDICATOR
NMC TO ECS	=	[NMC IN TRAY ARRIVAL MESSAGE
	|	NMC IN SYSTEM RESTART MESSAGE
	|	NMC IN OPERATIONAL STATUS MESSAGE
	|	NMC IN TRAY TRANS REQUIRE MESSAGE
	|	NMC IN TRAY ARRIVAL QUE MESSAGE
	|	NMC IN REPORT STATISTICS MESSAGE

```
                                          |   NMC IN TRAY REJECT
                                              MESSAGE]

NORFOLK START/STOP CONVEYOR MESSAGE =     MESSAGE TYPE

NORFOLK LANE ASSIGNMENT             =     LANE ID
                                    +     DIVERT

NORFOLK VIRGINIA DPI TOTE CONVEYOR PLC to HOST
                                    =     DPI BARCODE
                                    +     DPI SCANNER ID

NORFOLK VIRGINIA DPI TOTE CONVEYOR HOST to PLC
                                    =     DPI BARCODE
                                    +     DPI DIVERT ID

NORFOLK VIRGINIA DPI TOTE TO DATABASE =   [MOVE]

P&D STATUS MSG                      =     PREAMBLE
                                    +     HARDWARE PLC NUMBER
                                    +     COMMAND TYPE
                                    +     TRAN ID
                                    +     CRANE P&D ZONE
                                    +     CRANE COMMAND
                                    +     CHECKSUM
                                    +     POSTAMBLE

PALLET LOG MESSAGE                  =     [PALLET TO TC
                                    |     TC TO PALLET
                                    +     STANDARD LOG MESSAGE]

PALLET TO DATABASE                  =     [CART TYPE
                                    |     CONVEYANCE
                                    |     MOVE
                                    |     SYSTEMINF
                                    |     WORKSTATION]

PALLET TO ECS                       =     [09 CONVEYOR PLC ZONE
                                              STATUS
                                    |     11 LOAD PRESENT
                                    |     13 PALLET ARRIVAL
                                    |     14 TRANSPORTER STATUS]

PALLET TO LOG                       =     [STANDARD LOG MESSAGE]

PALLET TO TC                        =     [UAR
                                    |     UIR
```

```
                                        |   UMR
                                        |   ALERT
                                        |   SUBCONTROLLER UPDATE]

PLC NUMBER                              =   PLCN PLC NUMBER
                                        +   PLCN SPUR STAT
                                        +   PLCN SPUR TYPE

PLCS                                    =   PLCS NUMBER
                                        +   PLCS SUBSYSTEM
                                        +   PLCS STATUS

PLC TO CSF                              =   [S/RM TO HOST COMM MSG
                                        |   TRACKING ARRIVAL MSG
                                        |   DISCRETE TRANSITION MSG
                                        |   TRACKING STATUS MSG
                                        |   SIZING MSG
                                        |   FAULT MSG
                                        |   STATUS MSG]

PLC TO LOG (new)                        =   [[CSF TO PLC] | [TRIAX TO PLC]
                                            | [Y109 TO PLC]]
                                        |   [[PLC TO CSF] | [PLC TO TRIAX]
                                            | [PLC TO Y109]]
                                        |   [STANDARD LOG MESSAGE]]

PLC TO SMN                              =   [STACKMAN
                                            WORKSTATION RELEASE
                                            REQUEST ("10")
                                        |   STACKMAN EQUIPMENT
                                            STATUS REPORT ("51")
                                        |   STACKMAN RETRIEVE TO
                                            WORKSTATION COMPLETE
                                            ("61")
                                        |   STACKMAN RETRIEVE
                                            (CRANE PORTION)
                                            COMPLETE ("62")
                                        |   STACKMAN STORE
                                            COMPLETE ("71")
                                        |   STACKMAN WORKSTATION
                                            RELEASE COMPLETE ("72")]

PLC TO TRIAX                            =   [TRIAX CONVEYOR STORAGE
                                            LOCATION SCAN 01 MESSAGE
```

	|	TRIAX CONVEYOR STORAGE LOCATION PALLET ARRIVAL AT INBOUND TO CRANE LOCATION 03 MESSAGE
	|	TRIAX CONVEYOR LOCK LANE REQUEST 05 MESSAGE
	|	TRIAX CONVEYOR STORAGE LOCATION ARRIVAL AT OPERATOR WORKSTATION 07 MESSAGE
	|	TRIAX CONVEYOR CONFIRM ARRIVAL AT CRANE OUTBOUND STATION ACKNOWLEDGE 09 MESSAGE
	|	TRIAX CRANE STATUS RESPONSE 51 MESSAGE
	|	TRIAX CRANE PICK PROCEED TO STORAGE LOCATION STATUS 55 MESSAGE
	|	TRIAX CRANE STOW PROCEED TO STORAGE LOCATION STATUS 57 MESSAGE
	|	TRIAX CRANE STOW PROCEED TO INBOUND PICKUP LOCATION STATUS 59 MESSAGE
	|	TRIAX CRANE PICK PROCEED TO OUTBOUND DELIVERY STATION STATUS 61 MESSAGE]
PLC TO Y109	=	[[Y109 PALLET SORTER INDUCTION SCAN 01 MESSAGE]
	|	[Y109 CASE SORTER INDUCTION SCAN 03 MESSAGE]
	|	[Y109 MODE RESPONSE 09 MESSAGE]]
QUES	=	[QUES ID
	+	QUES MOVE CON NO
	+	QUES EMERGENCY
	+	QUES TIMESTAMP]
RAYMOND CAROUSEL IN ACK	=	[DLE
	+	ACK
	+	CARRIAGE RETURN CHARACTER
RAYMOND CAROUSEL IN NAK	=	[START TEXT CHARACTER
	+	CONTROLLER ID

	+	CONTROLLER ID (redundant)
	+	STATUS BYTE (1)
	+	STATUS BYTE (2)
	+	STATUS BYTE (3)
	+	BIN NUMBER SETTING
	+	MESSAGE TYPE
	+	END OF TEXT CHARACTER
	+	CARRIAGE RETURN CHARACTER]
RAYMOND CAROUSEL IN POLL	=	[DLE
	+	ACK
	+	CARRIAGE RETURN CHARACTER]
RAYMOND CAROUSEL OUT CLEAR	=	[END OF TEXT CHARACTER
	+	CONTROLLER ID
	+	CONTROLLER ID (redundant)
	+	'S'
	+	START TEXT CHARACTER
	+	'C'
	+	"0000"
	+	MESSAGE TYPE
	+	CARRIAGE RETURN CHARACTER]
RAYMOND CAROUSEL OUT GOTO	=	[END OF TEXT CHARACTER
	+	CONTROLLER ID
	+	CONTROLLER ID (redundant)
	+	'S'
	+	START TEXT CHARACTER
	+	'G'
	+	'O'
	+	BIN NUMBER SETTING
	+	MESSAGE TYPE
	+	END OF TEXT RETURN
	+	CARRIAGE RETURN]
RAYMOND CAROUSEL OUT HOME	=	[END OF TEXT CHARACTER
	+	CONTROLLER ID
	+	CONTROLLER ID (redundant)
	+	'S'
	+	START TEXT CHARACTER
	+	'H'
	+	"0000"
	+	MESSAGE TYPE

	+	CARRIAGE RETURN CHARACTER]
RAYMOND CAROUSEL OUT POLL1	=	[END OF TRANSMISSION CHARACTER
	+	CONTROLLER ID
	+	CONTROLLER ID (redundant)
	+	'P'
	+	ENQUEUE CHARACTER]
RAYMOND CAROUSEL OUT POLL2	=	[END OF TRANSMISSION CHARACTER
	+	CONTROLLER ID
	+	CONTROLLER ID (redundant)
	+	'Q'
	+	ENQUEUE CHARACTER]
RAYMOND CAROUSEL OUT POLL3	=	[END OF TRANSMISSION CHARACTER
	+	CONTROLLER ID
	+	CONTROLLER ID (redundant)
	+	'R'
	+	ENQUEUE CHARACTER]
RAYMOND CAROUSEL OUT POLL4	=	[END OF TRANSMISSION CHARACTER
	+	CONTROLLER ID
	+	CONTROLLER ID (redundant)
	+	'T'
	+	ENQUEUE CHARACTER]
RAYMOND CAROUSEL OUT RESET	=	[END OF TEXT CHARACTER
	+	CONTROLLER ID
	+	CONTROLLER ID (redundant)
	+	'S'
	+	START TEXT CHARACTER
	+	'R'
	+	"0000"
	+	MESSAGE TYPE
	+	CARRIAGE RETURN CHARACTER]
RAYMOND CAROUSEL OUT STOP	=	[END OF TEXT CHARACTER
	+	CONTROLLER ID
	+	CONTROLLER ID (redundant)
	+	'S'
	+	START TEXT CHARACTER

```
                                        +   'S'
                                        +   "0000"
                                        +   MESSAGE TYPE
                                        +   CARRIAGE RETURN
                                            CHARACTER]

RAYMOND CAROUSEL TO ECS                 =   [RAYMOND IN ACK
                                        |   RAYMOND IN NAK
                                        |   RAYMOND IN POLL
                                            RESPONSE]

RAYMOND CAROUSEL TO LOG                 =   [STANDARD LOG MESSAGE]

RAYMOND CAROUSEL TO TC                  =   [UAR
                                        |   UIR
                                        |   UMR
                                        |   ALERT
                                        |   SUBCONTROLLER UPDATE]

RAYMOND CAROUSEL TO SUBCONTROLLER       =   [RAYMOND CAROUSEL TO
                                            TC]

REQUEST FOR LANE ASSIGNMENT             =   TRACY REQUEST FOR LANE
                                            ASSIGNMENT

RESTRICTED INTERNAL MESSAGE             =   [A21 INTERNAL MESSAGE
                                        |   A23 INTERNAL MESSAGE
                                        |   A41 INTERNAL MESSAGE
                                        |   A42 INTERNAL MESSAGE
                                        |   A44 INTERNAL MESSAGE
                                        |   J21 INTERNAL MESSAGE
                                        |   K22 INTERNAL MESSAGE
                                        |   K24 INTERNAL MESSAGE
                                        |   J31 INTERNAL MESSAGE
                                        |   K32 INTERNAL MESSAGE
                                        |   J41 INTERNAL MESSAGE
                                        |   K42 INTERNAL MESSAGE
                                        |   J51 INTERNAL MESSAGE
                                        |   J53 INTERNAL MESSAGE
                                        |   J55 INTERNAL MESSAGE
                                        |   J61 INTERNAL MESSAGE
                                        |   J63 INTERNAL MESSAGE
                                        |   K52 INTERNAL MESSAGE
                                        |   K54 INTERNAL MESSAGE
                                        |   K56 INTERNAL MESSAGE
                                        |   K62 INTERNAL MESSAGE
                                        |   K64 INTERNAL MESSAGE
```

	|	M31 INTERNAL MESSAGE
	|	M33 INTERNAL MESSAGE
	|	Z22 INTERNAL MESSAGE]
S/RM TO HOST COMM MSG	=	PREAMBLE
	+	HARDWARE PLC NUMBER
	+	COMMAND TYPE
	+	TRAN ID
	+	S/RM BUSY INDICATOR
	+	COMMAND DONE INDICATOR
	+	KILL DONE INDICATOR
	+	HALF CYCLE DONE INDICATOR
	+	AUTO MODE INDICATOR
	+	MANUAL MODE INDICATOR
	+	RESERVED (CSF)
	+	CARRIAGE HOME INDICATOR
	+	EDM WARMED INDICATOR
	+	PENDING EMPTY INDICATOR
	+	BATTERY LOW INDICATOR
	+	SHUTTLE CENTERED INDICATOR
	+	LOAD PRESENT INDICATOR
	+	FAULT INDICATOR
	+	FAULT NUMBER
	+	CURRENT BAY POSITION
	+	CURRENT HOIST POSITION
	+	SEQUENCE STEP
	+	AISLE TRAVEL TIME
	+	HOIST TRAVEL TIME
	+	SHUTTLE EXTEND TIME
	+	HOIST W/SHT ENTEND TIME
	+	SHUTTLE CENTER TIME
	+	PENDING IDLE TIME
	+	CHECKSUM
	+	POSTAMBLE
SCALE TO AWOS	=	WEIGHT
	+	WEIGHT UNIT INDICATOR
SCANNER TO AWOS	=	CONTROL NUMBER
SECT	=	SECT_ID
	+	SECT_ENABLED_STAT
	+	SECT_CTRL_CABINET
	+	SECT_FAULTED_STAT
SECTION START/STOP MSG	=	PREAMBLE

	+	HARDWARE PLC NUMBER
	+	COMMAND TYPE
	+	TRAN ID
	+	CONVEYOR SECT
	+	SECT_ENABLED_STAT
	+	CHECKSUM
	+	POSTAMBLE
SIZING MSG	=	PREAMBLE
	+	HARDWARE PLC NUMBER
	+	COMMAND TYPE
	+	TRAN ID
	+	CURRENT ZONE NUMBER
	+	LOAD ID
	+	REJECT STATUS
	+	CHECKSUM
	+	POSTAMBLE
SIZE INFO	=	START TEXT CHARACTER
	+	LENGTH
	+	WIDTH
	+	HEIGHT
	+	WEIGHT
	+	CARRIAGE RETURN CHARACTER
	+	END OF TEXT CHARACTER
SMM	=	SEQUENCE NUMBER
	+	CONTROL NUMBER
	+	SHIPMENT UNIT
	+	LOCATION
	+	DESTINATION
	+	SOURCE
	+	ALTERNATE DESTINATION
	+	SECOND ALTERNATE DESTINATION
	+	CHAIN STRUCTURE
	+	CONVEYANCE ID
	+	2ND CONVEYANCE ID
	+	HANDLING UNIT
	+	PRIORITY
	+	FLAG
	+	OPTION
	+	WORK TYPE
	+	DATETIME STAMP
SMN TO CDB	=	[ASAQ

```
                                        |   ASRS
                                        |   ASWQ
                                        |   SPAL
                                        |   WKS2]

SMN TO LOG                              =   STANDARD LOG MESSAGE

SMN TO PLC                              =   [STACKMAN STATUS
                                            REQUEST
                                        |   STACKMAN RETRIEVE
                                            FROM HIGH RISE REQUEST
                                        |   STACKMAN STORE TO HIGH
                                            RISE REQUEST
                                        |   STACKMAN ABORT
                                            COMMAND]

SMN TO TC                               =   STACKER TO TC

SORTER DDJC LOG MESSAGE                 =   [SORTER TO TC
                                        |   TC TO SORTER
                                        +   STANDARD LOG MESSAGE]

SORTER DDJC TO DATABASE                 =   [MOVE]

SORTER DDJC TO ECS                      =   [CONTROL NUMBER]

SORTER DDJC TO LOG                      =   [STANDARD LOG MESSAGE]

SORTER DDJC TO TC                       =   [CONTROL NUMBER
                                        |   M02]

SORTER LOG MESSAGE                      =   [SORTER TO TC
                                        |   TC TO SORTER
                                        +   STANDARD LOG MESSAGE]

SORTER TO DATABASE                      =   [CHUTE
                                        |   MOVE
                                        |   PLCS]

SORTER TO ECS                           =   [02 TABLE FULL
                                        |   03 PACKAGE DUMPED
                                        |   05 PRODUCT FILE TABLE
                                            PURGED
                                        |   08 SORTER STATUS
                                        |   ACK
                                        |   NAK]
```

```
SORTER TO LOG                          =   [STANDARD LOG MESSAGE]

SORTER TO TC                           =   [UAR
                                       |   UIR
                                       |   UMR
                                       |   ALERT
                                       |   SUBCONTROLLER UPDATE]

SPAL                                   =   SPAL ID
                                       +   SPAL CON NO
                                       +   SPAL SRC LOC
                                       +   SPAL INTR LOC
                                       +   SPAL DST LOC
                                       +   SPAL CUR LOC
                                       +   SPAL LAST SCANNER
                                       +   SPAL ERR
                                       +   SPAL TIMESTAMP
                                       +   SPAL RECIRC CNT
                                       +   SPAL COMMAND LAST
                                       +   SPAL COMMAND CURR
                                       +   SPAL COMMAND NEXT
                                       +   SPAL IN OUT TYPE
                                       +   SPAL STATUS

STACKER LOG MESSAGE                    =   STANDARD LOG MESSAGE

STACKER TO ECS                         =   [NMC TO ECS
                                       |   AIR FORCE STACKER TO
                                           ECS
                                       |   NAVY STACKER TO ECS
                                       |   PLC TO SMN]

STACKER TO TC                          =   [UAR
                                       |   UIR
                                       |   UMR
                                       |   ALERT
                                       |   SUBCONTROLLER UPDATE]

STACKMAN ABORT COMMAND ("98")          =   STACKMAN STANDARD
                                           MESSAGE

STACKMAN EQUIPMENT STATUS REPORT ("51")
                                       =   STACKMAN STANDARD
                                           MESSAGE

STACKMAN RETRIEVE (CRANE PORTION) COMPLETE ("62")
```

	=	STACKMAN STANDARD MESSAGE
STACKMAN RETRIEVE FROM HIGH RISE REQUEST ("60")		
	=	STACKMAN STANDARD MESSAGE
STACKMAN RETRIEVE TO WORKSTATION COMPLETE ("61")		
	=	STACKMAN STANDARD MESSAGE
STACKMAN STANDARD MESSAGE	=	START TEXT CHARACTER
	+	COMMAND NUMBER
	+	EQUIPMENT ID2
	+	AISLE NUMBER
	+	BAY
	+	TIER2
	+	WKST ID
	+	CONVEYANCE ID5
	+	STATUS CODE3
	+	TIMESTAMP
	+	STRETCH WRAP INDICATOR
	+	SPARE
	+	END OF TEXT CHARACTER
	+	CHECKSUM3
`	+	CARRIAGE RETURN CHARACTER
STACKMAN STATUS REQUEST ("50")	=	STACKMAN STANDARD MESSAGE
STACKMAN STORE COMPLETE ("71")	=	STACKMAN STANDARD MESSAGE
STACKMAN STORE TO HIGH RISE REQUEST ("70")		
	=	STACKMAN STANDARD MESSAGE
STACKMAN WORKSTATION RELEASE COMPLETE ("72")		
	=	STACKMAN STANDARD MESSAGE
STACKMAN WORKSTATION RELEASE REQUEST ("10")		
	=	STACKMAN STANDARD MESSAGE
STAND	=	STAND ID

	+	STAND TRAN ID
	+	STAND STATUS
	+	STAND MODULE ID
	+	STAND AREA
	+	STAND PREV EMPTY
	+	STAND NEXT EMPTY
STANDARD LOG MESSAGE	=	DATETIME STAMP
	+	TO FROM INDICATOR
	+	DEVICE DESIGNATOR
	+	MESSAGE TYPE
	+	MESSAGE SIZE
	+	TEXT
START/STOP CONVEYOR MESSAGE	=	[TRACY START/STOP CONVEYOR MESSAGE
	|	NORFOLK START/STOP CONVEYOR MESSAGE]
STATUS MSG	=	PREAMBLE
	+	HARDWARE PLC NUMBER
	+	COMMAND TYPE
	+	TRAN ID
	+	CONVEYOR STATUS
	+	AISLE STATUS
	+	CHECKSUM
	+	POSTAMBLE
STATUS UPDATE MSG	=	PREAMBLE
	+	HARDWARE PLC NUMBER
	+	COMMAND TYPE
	+	TRAN ID
	+	CONVEYOR STATUS
	+	AISLE STATUS
	+	CHECKSUM
	+	POSTAMBLE
STKR	=	STKR_ID
	+	STKR_LOAD_ID
	+	STKR_CURR_TRAN_ID
	+	STKR_CURR_CMND
	+	STKR_NEXT_TRAN_ID
	+	STKR_NEXT_CMND
	+	STKR_STAT
	+	STKR_MODE
	+	STKR_FUNC
	+	STKR_FAULT

```
                                          +   STKR_ACTV

SUBCONTROLLER TO RAYMOND CAROUSEL         =   [TC TO RAYMOND
                                              CAROUSEL]

SUBCONTROLLER TO TRAFFIC CONTROLLER       =   [UAR
                                          |   UIR
                                          |   UMR
                                          |   ALERT
                                          |   SUBCONTROLLER UPDATE]

SUBCONTROLLER UPDATE                      =   [INTERNAL MESSAGE
                                          |   U06 INTERNAL MESSAGE
                                          |   U08 INTERNAL MESSAGE
                                          |   U10 INTERNAL MESSAGE
                                          |   U12 INTERNAL MESSAGE
                                          |   U16 INTERNAL MESSAGE
                                          |   U31 INTERNAL MESSAGE
                                          |   U33 INTERNAL MESSAGE
                                          |   U35 INTERNAL MESSAGE]

SYSINF                                    =   SYSINFO

SYSINFO                                   =   FIRST EMPTY MODULE
                                          +   LAST EMPTY MODULE

SYSTEM INF                                =   SYS MODE OF OPERATION
                                          +   SYS LOOP COUNT
                                          +   SYS PRIORITY
                                          +   SYS STATE
                                          +   SYS PLC MODE
                                          +   SYS EMPTY CART MAN MODE
                                          +   SYS SPUR STATUS
                                          +   SYS OVERRIDE PRIO CART
                                          +   SYS MISDIVERT
                                          +   SYS TOTE/LANE XREF
                                          +   SYS SORT COUNTS

T01                                       =   MESSAGE ID
                                          +   KEYPAD ID
                                          +   DESTINATION
                                          +   TYPE

T03                                       =   MESSAGE ID
                                          +   KEYPAD ID
                                          +   DESTINATION
                                          +   TYPE
```

	+	CART ID
T05	=	MESSAGE ID
	+	KEYPAD ID
	+	SOURCE4
	+	DESTINATION
T07	=	MESSAGE ID
	+	ZONE ID
	+	TYPE
T11	=	MESSAGE ID
	+	ZONE ID
	+	CART ID
T13	=	MESSAGE ID
	+	ZONE ID
	+	RESET CODE
T15	=	MESSAGE ID
T30	=	MESSAGE ID
	+	START/STOP CODE
T34	=	MESSAGE ID
T36	=	MESSAGE ID
T38	=	MESSAGE ID
	+	TOTE WEIGHT
T40	=	MESSAGE ID
	+	DIVERT
	+	LANE ID3
	+	LANE ID3
TC TO A-B PLCS	=	[SMM
	|	URA
	|	URI
	|	URM]
TC TO AGV	=	[SMM
	|	URA
	|	URI
	|	URM]

```
TC TO AIC                    =   [TC TO ACTIVE ITEM
                                 CONVEYOR]

TC TO AWOS                   =   [SMM
                             |   URA
                             |   UKR
                             |   URI
                             |   URM]

TC TO CAROUSEL               =   [SMM
                             |   URA
                             |   URI
                             |   URM]

TC TO CSF                    =   [SMM
                             |   URA
                             |   URI
                             |   URM
                             |   URS]

TC TO DDDE PCS               =   [SMM
                             |   URA
                             |   URI
                             |   URM]

TC TO HP                     =   [HP OUT LOCATION INQUIRY
                             |   HP OUT TOTE INQUIRY
                             |   HP OUT TOTE IN TRAFFIC
                                 INQUIRY
                             |   HP OUT TOTE ROUTING
                             |   HP OUT TOTE RELEASE
                             |   HP OUT EMPTY TOTE
                                 NOTIFICATION
                             |   HP OUT MULTIPLE TOTE
                                 ROUTING]

TC TO KEYPAD                 =   [ALERT
                                 SUBCONTROLLER UPDATE]

TC TO NLSC                   =   [SMM
                             |   URA
                             |   URI
                             |   URM]

TC TO NVT                    =   [SMM
                             |   URA
                                 |   URI
```

```
                                    |   URM]

TC TO PALLET                        =   [SMM
                                    |   URA
                                    |   URI
                                    |   URM
                                    |   ALERT
                                    |   SUBCONTROLLER UPDATE]

TC TO PCS                           =   [SMM
                                    |   URA
                                    |   URI
                                    |   URM]

TC TO RAYMOND CAROUSEL              =   [SMM
                                    |   URA
                                    |   URI
                                    |   URM]

TC TO SORTER                        =   [SMM
                                    |   URA
                                    |   URI
                                    |   URM
                                    |   ALERT
                                    |   SUBCONTROLLER UPDATE]

TC TO SORTER DDJC                   =   [SMM
                                    |   URA
                                    |   URI
                                    |   URM
                                    |   ALERT]

TC TO SMN                           =   TC TO STACKER

TC TO STACKER                       =   [SMM
                                    |   URA
                                    |   URI
                                    |   URM]

TC TO TOTE                          =   [SMM
                                    |   URA
                                    |   URI
                                    |   URM
                                    |   ALERT
                                    |   SUBCONTROLLER UPDATE]

TC TO TOWLINE                       =   [SMM
```

```
                                        |   URA
                                        |   URI
                                        |   URM
                                        |   ALERT
                                        |   SUBCONTROLLER UPDATE]

TC TO TRIAX                             =   [SMM
                                        |   URA
                                        |   URI
                                        |   URM
                                        |   ALERT
                                        |   SUBCONTROLLER UPDATE]

TC TO UI                                =   [TC TO USER]

TC TO USER                              =   [UAR
                                        |   UIR
                                        |   UMR
                                        |   ALERT
                                        |   SUBCONTROLLER UPDATE]

TC TO Y109                              =   [[SMM]
                                        |   [URA]
                                        |   [URI]
                                        |   [URM]]

TOTE                                    =   TOTE ID
                                        +   TOTE LOCATION ID
                                        +   TOTE P/R IND
                                        +   TOTE CONSOLIDATION FLD
                                        +   TOTE CN
                                        +   TOTE DESTINATION
                                        +   TOTE ROUTING
                                        +   TOTE CHAIN ID
                                        +   TOTE NO IN CHAIN
                                        +   TOTE PRES LOC
                                        +   TOTE STATUS
                                        +   TOTE DATE
                                        +   TOTE TIME

TOTE LOG MESSAGE                        =   [TOTE TO TC
                                        |   TC TO TOTE
                                        +   STANDARD LOG MESSAGE]

TOTE TO DATABASE                        =   [CHAIN
                                        |   CONVEYANCE
                                        |   MOVE
```

	|	PLC NUMBER
	|	SYSTEMINF
	|	WORKSTATION]
TOTE TO ECS	=	[09 CONVEYOR PLC ZONE STATUS]
TOTE TO LOG	=	[STANDARD LOG MESSAGE]
TOTE TO TC	=	[UAR
	|	UIR
	|	UMR
	|	ALERT
	|	SUBCONTROLLER UPDATE]
TOWLINE CONFIG/TRACKING MESSAGE	=	[07 CART DESTINATION FILE UPLOAD
	|	10 FIRST LOOP TRACKING FILE UPLOAD
	|	11 SECOND LOOP TRACKING FILE UPLOAD]
TOWLINE TO CDB	=	[CART QUEUE
	|	CART TYPE
	|	CHAIN
	|	CONFIGURATION
	|	CONVEYANCE
	|	DEPOT AREA
	|	FROM/TO
	|	FUNCTION
	|	MOVE
	|	PLC NUMBER
	|	SYSTEM INF
	|	WAREHOUSE
	|	WORKSTATION]
TOWLINE TO ECS	=	[01 CART ARRIVAL
	|	02 MISSED DIVERT
	|	04 CART AT WORKSTATION
	|	05 TRANSFER/LOOP STATUS
	|	07 CART DESTINATION FILE UPLOAD
	|	08 TOWLINE ZONE MODE STATUS
	|	10 FIRST LOOP TRACKING FILE UPLOAD
	|	11 SECOND LOOP TRACKING FILE UPLOAD

	|	13 CART INFORMATION REQUEST REPLY]
TOWLINE TO LOG	=	[STANDARD LOG MESSAGE]
TOWLINE TO TC	=	[UAR
	|	UIR
	|	UMR
	|	ALERT
	|	SUBCONTROLLER UPDATE]
TRACKING ARRIVAL MSG	=	PREAMBLE
	+	HARDWARE PLC NUMBER
	+	COMMAND TYPE
	+	TRAN ID
	+	ARRIVAL ZONE NUMBER
	+	DESTINATION ZONE NUMBER
	+	LOAD ID
	+	CHECKSUM
	+	POSTAMBLE
TRACKING MOVE MSG	=	PREAMBLE
	+	HARDWARE PLC NUMBER
	+	COMMAND TYPE
	+	TRAN ID
	+	CURRENT ZONE NUMBER
	+	DESTINATION ZONE NUMBER
	+	LOAD ID
	+	CHECKSUM
	+	POSTAMBLE
TRACKING READ REQUEST MSG	=	PREAMBLE
	+	HARDWARE PLC NUMBER
	+	COMMAND TYPE
	+	TRAN ID
	+	CONVEYOR SECT
	+	CHECKSUM
	+	POSTAMBLE
TRACKING STATUS MSG	=	PREAMBLE
	+	HARDWARE PLC NUMBER
	+	COMMAND TYPE
	+	TRAN ID
	+	SECT_ENABLED_STAT
	+	CURRENT ZONE NUMBER

	+	DESTINATION ZONE NUMBER
	+	LOAD ID
	+	CURRENT ZONE NUMBER
	+	DESTINATION ZONE NUMBER
	+	LOAD ID
	+	CURRENT ZONE NUMBER
	+	DESTINATION ZONE NUMBER
	+	LOAD ID
	+	CURRENT ZONE NUMBER
	+	DESTINATION ZONE NUMBER
	+	LOAD ID
	+	CHECKSUM
	+	POSTAMBLE
TRACKING UPDATE MSG	=	PREAMBLE
	+	HARDWARE PLC NUMBER
	+	COMMAND TYPE
	+	TRAN ID
	+	CURRENT ZONE NUMBER
	+	DESTINATION ZONE NUMBER
	+	LOAD ID
	+	CHECKSUM
	+	POSTAMBLE
TRACY ARE YOU ALIVE MESSAGE	=	MESSAGE TYPE2
TRACY CHANGE SCAN MODE MESSAGE	=	MESSAGE TYPE2
	+	COMMAND CODE
TRACY LANE ASSIGNMENT MESSAGE	=	MESSAGE TYPE2
	+	COMMAND CODE
	+	CONTROL NUMBER
	+	LANE ID2
	+	LANE ID2
TRACY REQUEST FOR LANE ASSIGNMENT	=	MESSAGE TYPE2
	+	COMMAND CODE
	+	CONTROL NUMBER
TRACY START/STOP CONVEYOR MESSAGE	=	MESSAGE TYPE2
	+	COMMAND CODE

TRAFFIC CONTROLLER TO SUBCONTROLLER = [SSM
| URA
| URI
| URM
| ALERT
| SUBCONTROLLER UPDATE]

TRIAX CRANE ABORT MOVEMENT REQUEST 70 MESSAGE]
= TRIAX CRANE STANDARD MESSAGE

TRIAX CRANE PICK PROCEED TO OUTBOUND DELIVERY STATION REQUEST 60 MESSAGE
= TRIAX CRANE STANDARD MESSAGE

TRIAX CRANE PICK PROCEED TO OUTBOUND DELIVERY STATION STATUS 61 MESSAGE
= TRIAX CONVEYOR STANDARD MESSAGE

TRIAX CRANE PICK PROCEED TO STORAGE LOCATION REQUEST 54 MESSAGE
= TRIAX CRANE STANDARD MESSAGE

TRIAX CRANE PICK PROCEED TO STORAGE LOCATION STATUS 55 MESSAGE
= TRIAX CRANE STANDARD MESSAGE

TRIAX CRANE STATUS REQUEST 52 MESSAGE = TRIAX CRANE STANDARD MESSAGE

TRIAX CRANE STATUS RESPONSE 51 MESSAGE
= TRIAX CRANE STANDARD MESSAGE

TRIAX CRANE STOW PROCEED TO INBOUND PICKUP LOCATION REQUEST 58 MESSAGE
= TRIAX CRANE STANDARD MESSAGE

TRIAX CRANE STOW PROCEED TO INBOUND PICKUP LOCATION STATUS 59 MESSAGE
= TRIAX CRANE STANDARD MESSAGE

TRIAX CRANE STOW PROCEED TO STORAGE LOCATION REQUEST 56 MESSAGE

= TRIAX CRANE STANDARD MESSAGE

TRIAX CRANE STOW PROCEED TO STORAGE LOCATION STATUS 57 MESSAGE

= TRIAX CRANE STANDARD MESSAGE

TRIAX CRANE STANDARD MESSAGE = TRIAX HEADER
+ TRIAX COMMAND TYPE
+ [TRIAX AISLE ID | TRIAX CRANE ID]
+ TRIAX HEARTBEAT
+ TRIAX STATUS CODE
+ TRIAX SEGMENT NUMBER
+ TRIAX LEVEL
+ TRIAX CRANE RESERVED FIELD
+ TRIAX FOOTER

TRIAX CONVEYOR CONFIRM ARRIVAL AT CRANE INBOUND STATION 08 MESSAGE

= TRIAX CONVEYOR STANDARD MESSAGE

TRIAX CONVEYOR CONFIRM ARRIVAL AT CRANE OUTBOUND STATION ACKNOWLEDGE 09 MESSAGE

= TRIAX CONVEYOR STANDARD MESSAGE

TRIAX CONVEYOR CONFIRM ARRIVAL AT CRANE OUTBOUND STATION 16 MESSAGE

= TRIAX CONVEYOR STANDARD MESSAGE

TRIAX CONVEYOR CONFIRM ARRIVAL AT OPERATOR WORKSTATION ACKNOWLEDGE 10 MESSAGE

= TRIAX CONVEYOR STANDARD MESSAGE

TRIAX CONVEYOR LOCK LANE FOR RECEIPT INDUCTION PALLET CONFIRM 12 MESSAGE

= TRIAX CONVEYOR STANDARD MESSAGE

TRIAX CONVEYOR LOCK LANE FOR RECEIPT INDUCTION PALLET DENY 14 MESSAGE

	=	TRIAX CONVEYOR STANDARD MESSAGE

TRIAX CONVEYOR LOCK LANE REQUEST 05 MESSAGE

	=	TRIAX CONVEYOR STANDARD MESSAGE

TRIAX CONVEYOR MOVE STORAGE LOCATION PALLET, EMPTY NEEDED 04 MESSAGE

	=	TRIAX CONVEYOR STANDARD MESSAGE

TRIAX CONVEYOR MOVE STORAGE LOCATION PALLET, NO EMPTY NEEDED 02 MESSAGE

	=	TRIAX CONVEYOR STANDARD MESSAGE

TRIAX CONVEYOR RELEASE STORAGE LOCATION PALLET FROM OPERATOR WORKSTATION 06 MESSAGE

	=	TRIAX CONVEYOR STANDARD MESSAGE

TRIAX CONVEYOR STANDARD MESSAGE	=	TRIAX HEADER
	+	TRIAX COMMAND TYPE
	+	[TRIAX DESTINATION | TRIAX SOURCE]
	+	TRIAX LOCATION ID
	+	TRIAX CONVEYOR RESERVED FIELD
	+	TRIAX FOOTER

TRIAX CONVEYOR STORAGE LOCATION ARRIVAL AT OPERATOR WORKSTATION 07 MESSAGE

	=	TRIAX CONVEYOR STANDARD MESSAGE

TRIAX CONVEYOR STORAGE LOCATION PALLET ARRIVAL AT INBOUND TOCRANE LOCATION 03 MESSAGE

	=	TRIAX CONVEYOR STANDARD MESSAGE

TRIAX CONVEYOR STORAGE LOCATION SCAN 01 MESSAGE

	=	TRIAX CONVEYOR STANDARD MESSAGE

TRIAX FOOTER	=	TRIAX END OF TEXT
	+	TRIAX CHECKSUM

```
                                  +   TRIAX CARRIAGE RETURN

TRIAX HEADER                      =   TRIAX START OF TEXT

TRIAX LOG MESSAGE                 =   [STANDARD LOG MESSAGE]

TRIAX TO CDB                      =   [ASRS
                                  |   CONV
                                  |   MOVE
                                  |   QUES
                                  |   SPAL
                                  |   WKST]

TRIAX TO LOG                      =   [TRIAX LOG MESSAGE]

TRIAX TO PLC                      =   [TRIAX CONVEYOR MOVE
                                      STORAGE LOCATION PALLET,
                                      NO EMPTY NEEDED 02 MESSAGE
                                  |   TRIAX CONVEYOR MOVE
                                      STORAGE LOCATION PALLET,
                                      EMPTY NEEDED 04 MESSAGE
                                  |   TRIAX CONVEYOR RELEASE
                                      STORAGE LOCATION PALLET
                                      FROM OPERATOR
                                      WORKSTATION 06 MESSAGE
                                  |   TRIAX CONVEYOR CONFIRM
                                      ARRIVAL AT CRANE INBOUND
                                      STATION 08 MESSAGE
                                  |   TRIAX CONVEYOR CONFIRM
                                      ARRIVAL AT OPERATOR
                                      WORKSTATION ACKNOWLEDGE
                                      10 MESSAGE
                                  |   TRIAX CONVEYOR LOCK LANE
                                      FOR RECEIPT INDUCTION
                                      PALLET CONFIRM 12 MESSAGE
                                  |   TRIAX CONVEYOR LOCK LANE
                                      FOR RECEIPT INDUCTION
                                      PALLET DENY 14 MESSAGE
                                  |   TRIAX CONVEYOR CONFIRM
                                      ARRIVAL AT CRANE
                                      OUTBOUND STATION 16
                                      MESSAGE
                                  |   TRIAX CRANE STATUS REQUEST
                                      52 MESSAGE
                                  |   TRIAX CRANE PICK PROCEED
                                      TO STORAGE LOCATION
                                      REQUEST 54 MESSAGE
```

	|	TRIAX CRANE STOW PROCEED TO STORAGE LOCATION REQUEST 56 MESSAGE
	|	TRIAX CRANE STOW PROCEED TO INBOUND PICKUP LOCATION REQUEST 58 MESSAGE
	|	TRIAX CRANE PICK PROCEED TO OUTBOUND DELIVERY STATION REQUEST 60 MESSAGE
	|	TRIAX CRANE ABORT MOVEMENT REQUEST 70 MESSAGE]
TRIAX TO TC	=	[UAR
	|	UIR
	|	UMR
	|	ALERT
	|	SUBCONTROLLER UPDATE]
TRAN	=	TRAN ID
	+	TRAN SRC
	+	TRAN SRC P&D
	+	TRAN DEST AREA
	+	TRAN DEST P&D
	+	TRAN MODULE/PALLET IND
	+	TRAN PRIORITY
	+	TRAN MODULE/PALLET ID
	+	TRAN AGV
U06	=	MESSAGE ID
	+	KEYPAD ID
	+	10 (DESTINATION)
U08	=	MESSAGE ID
	+	TYPE
	+	CART DESTINATIONS
U10	=	MESSGE ID
	+	TYPE
	+	MAX CART NUM (CART ID
	+	DESTINATION)
U12	=	MESSAGE ID
	+	CART ID
	+	DESTINATION
	+	CHAIN ID
	+	CHAIN LENGTH

```
                                    +   RECIRCULATION COUNT

U16                                 =   MESSAGE ID
                                    +   STATUS OF UPDATE

U31                                 =   MESSAGE ID
                                    +   DEVICE ID
                                    +   TEXT20

U33                                 =   MESSAGE ID
                                    +   START/STOP CODE

U35                                 =   MESSAGE ID
                                    +   RESET TIME
                                    +   TOTAL COMPONENTS
                                    +   15 (COMPONENT)

UAR                                 =   INTERNAL MESSAGE

UI TO TC                            =   [USER TO TC]

UIR                                 =   [K02 INTERNAL MESSAGE
                                    |   K24 INTERNAL MESSAGE
                                    |   K32 INTERNAL MESSAGE
                                    |   K42 INTERNAL MESSAGE
                                    |   K52 INTERNAL MESSAGE
                                    |   K54 INTERNAL MESSAGE
                                    |   K56 INTERNAL MESSAGE
                                    |   K62 INTERNAL MESSAGE
                                    |   K64 INTERNAL MESSAGE]

UKR                                 =   [T01 INTERNAL MESSAGE
                                    |   T03 INTERNAL MESSAGE
                                    |   T05 INTERNAL MESSAGE
                                    |   T07 INTERNAL MESSAGE
                                    |   T09 INTERNAL MESSAGE
                                    |   T11 INTERNAL MESSAGE
                                    |   T13 INTERNAL MESSAGE
                                    |   T15 INTERNAL MESSAGE
                                    |   T30 INTERNAL MESSAGE
                                    |   T34 INTERNAL MESSAGE
                                    |   T36 INTERNAL MESSAGE
                                    |   T38 INTERNAL MESSAGE
                                    |   T40 INTERNAL MESSAGE]

UMR                                 =   N02 INTERNAL MESSAGE
```

```
URA                                  =   [A01 INTERNAL MESSAGE
                                     |   A03 INTERNAL MESSAGE
                                     |   A05 INTERNAL MESSAGE
                                     |   A07 INTERNAL MESSAGE
                                     |   A09 INTERNAL MESSAGE
                                     |   A21 INTERNAL MESSAGE
                                     |   A41 INTERNAL MESSAGE
                                     |   A44 INTERNAL MESSAGE]

URI                                  =   [J01 INTERNAL MESSAGE
                                     |   J31 INTERNAL MESSAGE
                                     |   J33 INTERNAL MESSAGE
                                     |   J41 INTERNAL MESSAGE
                                     |   J51 INTERNAL MESSAGE
                                     |   J53 INTERNAL MESSAGE
                                     |   J55 INTERNAL MESSAGE
                                     |   J61 INTERNAL MESSAGE
                                     |   J63 INTERNAL MESSAGE
                                     |   J71 INTERNAL MESSAGE
                                     |   J73 INTERNAL MESSAGE
                                     |   J75 INTERNAL MESSAGE
                                     |   J77 INTERNAL MESSAGE
                                     |   J79 INTERNAL MESSAGE
                                     |   J81 INTERNAL MESSAGE
                                     |   J83 INTERNAL MESSAGE
                                     |   J85 INTERNAL MESSAGE
                                     |   J87 INTERNAL MESSAGE
                                     |   J89 INTERNAL MESSAGE
                                     |   J91 INTERNAL MESSAGE
                                     |   J93 INTERNAL MESSAGE
                                     |   J95 INTERNAL MESSAGE
                                     |   J97 INTERNAL MESSAGE]

URM                                  =   [M01 INTERNAL MESSAGE]

URS                                  =   [V01 INTERNAL MESSAGE
                                     |   V03 INTERNAL MESSAGE
                                     |   V05 INTERNAL MESSAGE
                                     |   V07 INTERNAL MESSAGE
                                     |   V09 INTERNAL MESSAGE
                                     |   V11 INTERNAL MESSAGE
                                     |   V13 INTERNAL MESSAGE
                                     |   V15 INTERNAL MESSAGE
                                     |   V17 INTERNAL MESSAGE
                                     |   V19 INTERNAL MESSAGE
                                     |   V21 INTERNAL MESSAGE
                                     |   V23 INTERNAL MESSAGE
```

```
                                        |   V25 INTERNAL MESSAGE
                                        |   V27 INTERNAL MESSAGE
                                        |   V29 INTERNAL MESSAGE]

USER INPUT                              =   [M01 INTERNAL MESSAGE
                                        |   M02 STANDARD UP
                                            MESSAGE
                                        |   URA
                                        |   URI
                                        |   URS
                                        |   URM
                                        |   UKR]

USER TO ECS                             =   [SMM
                                        |   URA
                                        |   URI
                                        |   URM
                                        |   UKR]

USER TO TC                              =   [SMM
                                        |   M02 STANDARD UP
                                            MESSAGE
                                        |   URA
                                        |   URI
                                        |   URM
                                        |   UKR]

USR                                     =   [X20 INTERNAL MESSAGE
                                        |   X30 INTERNAL MESSAGE]

V01 INTERNAL MESSAGE                    =   MESSAGE ID
                                        +   CONV_STAT

V03 INTERNAL MESSAGE                    =   MESSAGE ID
                                        +   STKR ID
                                        +   STKR STAT
                                        +   STKR MODE

V05 INTERNAL MESSAGE                    =   MESSAGE ID
                                        +   ZONE_NAME
                                        +   DISCRETE TRANSACTION

V07 INTERNAL MESSAGE                    =   MESSAGE ID
                                        +   LOAD_ID
                                        +   ZONE_NAME
                                        +   ZONE_NAME
```

V09 INTERNAL MESSAGE	=	MESSAGE ID
	+	LOAD_ID
	+	ZONE_NAME
	+	ZONE_NAME
V11 INTERNAL MESSAGE	=	MESSAGE ID
	+	LOAD_ID
V13 INTERNAL MESSAGE	=	MESSAGE ID
	+	ZONE_NAME
	+	ZONE_TERMINAL_ID
	+	ZONE_ENRT_COUNT
	+	ZONE_LOAD_ID
	+	ZONE_LOAD_PRES
V15 INTERNAL MESSAGE	=	MESSAGE ID
	+	COMMAND TYPE
	+	CSF AISLE
	+	CSF LOCATION
	+	CSF LOCATION
V17 INTERNAL MESSAGE	=	MESSAGE ID
	+	START STOP CODE
V19 INTERNAL MESSAGE	=	MESSAGE ID
	+	SECT_ID
X20 INTERNAL MESSAGE	=	MESSAGE ID
	+	SECT_ID
	+	SUCCESS FLAG
V21 INTERNAL MESSAGE	=	MESSAGE_ID
	+	SECT_ID
	+	ZONE_ID
	+	SECT_ENABLED_STAT
V23 INTERNAL MESSAGE	=	MESSAGE ID
	+	SECT_ID
	+	ZONE_ID
V25 INTERNAL MESSAGE	=	MESSAGE ID
	+	SECT_ID
	+	ZONE_ID
	+	LOAD_ID
	+	ZONE_ID
V27 INTERNAL MESSAGE	=	MESSAGE ID

	+	SECT_ID
	+	ZONE_ID
	+	ZONE_LOAD_DEST
V29 INTERNAL MESSAGE	=	MESSAGE ID
	+	SECT_ID
	+	ZONE_ID
	+	ZONE_ID
WAREHOUSE	=	WHSE NUMBER
	+	WHSE DROP PT
WORKSTATION	=	WKST WORK STN
	+	WKST AREA
	+	WKST CAPAC
	+	WKST CHAIN ID
	+	WKST CON NO
	+	WKST CONVEY ID
	+	WKST COUNT ENRT
	+	WKST COUNT IN
	+	WKST COUNT REQD
	+	WKST CUR SHIP U NO
	+	WKST DFLT DEST
	+	WKST EMPL ID
	+	WKST LOG STA
	+	WKST NEXT LOOP
	+	WKST NEXT SPUR
	+	WKST OVER
	+	WKST PHY STA
	+	WKST PLC NO
	+	WKST PREV LOOP
	+	WKST PRIOR
	+	WKST RL COUNT
	+	WKST RL QUEUE
	+	WKST SPUR
	+	WKST WORK STN TY
WKS2	=	WKS2 ID
	+	WKS2 NAME
	+	WKS2 CAPACITY
	+	WKS2 ENRT COUNT
	+	WKS2 IN COUNT
	+	WKS2 SPAL ID
	+	WKS2 SPAL PRES
	+	WKS2 SPAL DEST
	+	WKS2 FAULT
	+	WKS2 LOGGED IN

	+	WKS2 TERMINAL ID
	+	WKS2 DESCRIPTION
	+	WKS2 TIMESTAMP
	+	WKS2 CONSOL
WKST	=	WKST ID
	+	WKST MOVE CON NO
	+	WKST DESIGNATOR
	+	WKST CAPAC
	+	WKST ENRT COUNT
	+	WKST SPAL ID
	+	WKST PALLET PRESENT
	+	WKST LOCKED
	+	WKST LOGGED IN
	+	WKST TERMINAL ID
X30 INTERNAL MESSAGE	=	MESSAGE ID
	+	SECT_ID
	+	TRACKING CHANGE TYPE
	+	SUCCESS FLAG
Y109 CASE SORTATION AMVE REQUEST 04 MESSAGE	=	[Y109 CASE STANDARD MESSAGE]
Y109 CASE SORTER INDUCTION SCAN 03 MESSAGE	=	[Y109 CASE STANDARD MESSAGE]
Y109 MODE REQUEST 06 MESSAGE	=	[Y109 MODE STANDARD MESSAGE]
Y109 MODE RESPONSE 09 MESSAGE	=	[Y109 MODE STANDARD MESSAGE]
Y109 PALLET SORTATION AMVE REQUEST 02 MESSAGE	=	[Y109 PALLET STANDARD MESSAGE]
Y109 PALLET SORTER INDUCTION SCAN 01 MESSAGE	=	[Y109 PALLET STANDARD MESSAGE]
Y109 CASE STANDARD MESSAGE	=	Y109 HEADER
	+	Y109 MESSAGE TYPE
	+	Y109 SCANNER ID
	+	CONTROL NUMBER

```
                                    +   Y109 PLC SEQUENCE NR
                                    +   Y109 DESTINATION
                                    +   Y109 CASE RESERVED FIELD
                                    +   Y109 CHECKSUM STATUS
                                    +   [Y109 FOOTER]

Y109 MODE STANDARD MESSAGE          =   Y109 HEADER
                                    +   Y109 MESSAGE TYPE
                                    +   Y109 SCANNER ID
                                    +   Y109 PLC MODE
                                    +   Y109 MODE RESERVED FIELD
                                    +   Y109 CHECKSUM STATUS
                                    +   [Y109 FOOTER]

Y109 PALLET STANDARD MESSAGE        =   Y109 HEADER
                                    +   Y109 MESSAGE TYPE
                                    +   Y109 SCANNER ID
                                    +   CONTROL NUMBER
                                    +   Y109 PLC SEQUENCE NR
                                    +   Y109 DESTINATION
                                    +   Y109 PALLET RESERVED FIELD
                                    +   Y109 CHECKSUM STATUS
                                    +   [Y109 FOOTER]

Y109 FOOTER                         =   TRIAX END OF TEXT
                                    +   TRIAX CHECKSUM
                                    +   TRIAX CARRIAGE RETURN

Y109 HEADER                         =   TRIAX START OF TEXT

Y109 LOG MESSAGE                    =   [STANDARD LOG MESSAGE]

Y109 TO CDB                         =   [AMVE
                                    |   LANE]

Y109 TO LOG                         =   [Y109 LOG MESSAGE]

Y109 TO PLC                         =   [[Y109 PALLET SORTATION
                                        AMVE 02 MESSAGE]
                                    |   [Y109 CASE SORTATION AMVE
                                        REQUEST 04 MESSAGE]
                                    |   [Y109 MODE REQUEST 06
                                        MESSAGE]]

Y109 TO TC                          =   [[UAR]
                                    |   [UIR]
                                    |   [UMR]
```

	|	[ALERT]]
Z02 INTERNAL MESSAGE	=	MESSAGE ID
	+	ALERT TEXT
	+	ALERT WARNING
Z04 INTERNAL MESSAGE	=	MESSAGE ID
	+	ALERT TEXT2
Z22 INTERNAL MESSAGE	=	MESSAGE ID
	+	ERROR TEXT
ZONE	=	ZONE_ID
	+	ZONE_SECT_ID
	+	ZONE_NAME
	+	ZONE_CAPC
	+	ZONE_ENRT_COUNT
	+	ZONE_LOAD_ID
	+	ZONE_LOAD_PRES
	+	ZONE_FAULT
	+	ZONE_LOAD_DEST
	+	ZONE_USES_TRACKING
	+	ZONE_LOGGED_IN
	+	ZONE_TERMINAL_ID

1.1 ECS Data Definitions

The following is an alphabetized list of data elements from the Data Structure List. Each data object is defined by data type, data size, a short description, and if available, possible values.

OBJECT NAME:	A-B PLCS CONTROL NUMBER
DATA TYPE:	ALPHANUMERIC
DATA SIZE:	6
VALUES:	5 Position Left Justified Barcode followed by 1 'Null'
DESCRIPTION:	Control Number assigned to and associated with material.

OBJECT NAME:	A-B PLCS CONVEYANCE ID
DATA TYPE:	ALPHANUMERIC
DATA SIZE:	6
VALUES:	('SPACE'R0001-'SPACE'R0999), ('SPACE' 'SPACE'0001)-('SPACE' 'SPACE'09999)
DESCRIPTION:	The conveyance ID of the item for which movement is requested.

OBJECT NAME:	A-B PLCS DESTINATION
DATA TYPE:	ALPHANUMERIC
DATA SIZE:	3
VALUES:	'PKG', 'PRK', 'CNS', 'OFR', 'MDL', 'PPP', 'PPM', 'RQI', PKS', PDO', 'ESI', 'MLN', 001-011, 200-223, 231-235, 411-455
DESCRIPTION:	The destination for the movement request. Represents a functional area or workstation of the warehouse.

OBJECT NAME:	A-B PLCS FILLER
DATA TYPE:	CHARACTER
DATA SIZE:	1
VALUES:	'SPACE', 'NULL'
DESCRIPTION:	Separates fields within a message or structure

OBJECT NAME:	A-B PLCS HEAVY LIGHT INDICATOR
DATA TYPE:	CHARACTER
DATA SIZE:	1
VALUES:	'0'(Light), '1'(Heavy), 'NULL'(Single Chutes), 'SPACE' (Chute 200 only)
DESCRIPTION:	Code describing the heavy light chute indicator

OBJECT NAME:	A-B PLCS SOURCE
DATA TYPE:	ALPHANUMERIC
DATA SIZE:	3
VALUES:	'PKG', 'PRK', 'CNS", 'MDL', 'PPP', 'PPM', 'RQI', PKS', PDO', 'ESI', MLN', 'PIC', 001-011, 200-223, 231-235, 411-455
DESCRIPTION:	The source functional area or workstation of the movement being requested.

OBJECT NAME: ACK
DATA TYPE: BYTE
DATA SIZE: 1
VALUES:
DESCRIPTION: An acknowledgment flag.

OBJECT NAME: ACTION CODE
DATA TYPE: NUMERIC
DATA SIZE: 2
VALUES:
DESCRIPTION: Code representing action requested. Meaning will depend on subcontroller which is to perform the action.

OBJECT NAME: ACTIVE FLAG
DATA TYPE: CHARACTER
DATA SIZE: 1
VALUES: 'Y', 'N'
DESCRIPTION: Indicates whether the workstation is active or inactive.

OBJECT NAME: ACTION RESPONSE CODE
DATA TYPE: NUMERIC
DATA SIZE: 2
VALUES:
DESCRIPTION: Code representing identifying outcome of requested action. Value will depend on action requested and subcontroller type responding.

OBJECT NAME: ADDRESS-FROM
DATA TYPE: ALPHANUMERIC
DATA SIZE: 5
VALUES: ABPxx, ACTxx, AGVxx, AWSxx, CARxx, CSFxx, FLSxx, FRTxx, HPMxx, KEYxx, NLSxx, NMCxx, NVTxx, PALxx, PSCxx, RAYxx, SMNxx, SRTxx, STKxx/NFSxx/HKSxx, SUBxx, TOTxx, TRFxx, TRXxx, UPSxx, USExx
DESCRIPTION: This is the identifier for the ECS system that originated the transaction. The first three letters represents the system with ABP=Allen Bradley PLCs, ACT=Active Item, AGV=Automated Guidance Vehicles, AWS=AWOS, CAR=Carousel, CSF=Consolidated Subsistence Facility, FLS=Air Force Laser Scanner, FRT=Freight Terminal, HPM=Hewlett Packard Controller, KEY=Keypad, NLS=NISTARS Laser Scanner, NMC=NISTARS Ministacker, NVT=Norfolk VA Tote, PAL=Pallet, PSC=Puget Sound Conveyor, RAY=Raymond Carousel, SMN=Stackman, SRT=Sorter, STK/NFS/HKS=Stacker, SUB=All Subcontrollers, TOT=Tote, TRF=Traffic Controller, TRX=Triax, and USE=User Interface. The fourth and fifth digits represent which copy of the system. (e.g. AGV02 would be AGV subcontroller number 2).

OBJECT NAME:	ADDRESS-TO
DATA TYPE:	ALPHANUMERIC
DATA SIZE:	5
VALUES:	ABPxx, ACTxx, AGVxx, AWSxx, CARxx, CSFxx, FLSxx, FRTxx, HPMxx, KEYxx, NLSxx, NMCxx, NVTxx, PALxx, PSCxx, RAYxx, SMNxx, SRTxx, STKxx/NFSxx/HKSxx, SUBxx, TOTxx, TRFxx, TRXxx, UPSxx, USExx
DESCRIPTION:	This is the identifier for the ECS system the transaction is bound for. The first three letters represents the system with ABP=Allen Bradley PLCs, ACT=Active Item, AGV=Automated Guidance Vehicles, AWS=AWOS, CAR=Carousel, CSF=Consolidated Subsistence Facility, FLS=Air Force Laser Scanner, FRT=Freight Terminal, HPM=Hewlett Packard Controller, KEY=Keypad, NLS=NISTARS Laser Scanner, NMC=NISTARS Ministacker, NVT=Norfolk VA Tote, PAL=Pallet, PSC=Puget Sound Conveyor, RAY=Raymond Carousel, SMN=Stackman, SRT=Sorter, STK/NFS/HKS=Stacker, SUB=All Subcontrollers, TOT=Tote, TRF=Traffic Controller, TRX=Triax, and USE=User Interface. The fourth and fifth digits represent which copy of the system. (e.g. AGV02 would be AGV subcontroller number 2).

OBJECT NAME:	AGV ID
DATA TYPE:	ALPHANUMERIC
DATA SIZE:	3
VALUES:	'001' - '050'
DESCRIPTION:	This is a unique identifier for each AGV in the building.

OBJECT NAME:	AGV STATUS
DATA TYPE:	ALPHANUMERIC
DATA SIZE:	1
VALUES:	'A' - Active, 'B' - At Battery, 'M' - At Maintenance, 'R' - Requires Assistance, 'O' - Off Wire
DESCRIPTION:	This is a one-digit code representing the status of the AGV.

OBJECT NAME:	AGV TRAN ID
DATA TYPE:	ALPHANUMERIC
DATA SIZE:	4
VALUES:	'0001' - '9999'
DESCRIPTION:	This is a unique identifier for the transaction being performed by the AGV.

OBJECT NAME:	AGV MODULE ID
DATA TYPE:	ALPHANUMERIC
DATA SIZE:	5
VALUES:	
DESCRIPTION:	This is a unique identifier for the module or pallet being transported by the AGV.

OBJECT NAME: AGV SRC P&D
DATA TYPE: ALPHANUMERIC
DATA SIZE: 3
VALUES: '001' - '999'
DESCRIPTION: This is a unique identifier for the source pickup and delivery stand.

OBJECT NAME: AGV DEST P&D
DATA TYPE: ALPHANUMERIC
DATA SIZE: 3
VALUES: '001' - '999'
DESCRIPTION: This is a unique identifier for the destination pickup and delivery stand.

OBJECT NAME: AIR FORCE BAY
DATA TYPE: ALPHANUMBERIC
DATA SIZE: 2
VALUES:
DESCRIPTION: Bay Number.

OBJECT NAME: AIR FORCE COMMAND
DATA TYPE: ALPHANUMBERIC
DATA SIZE: 2
VALUES: 'D1' - Deliver to end of aisle, 'A' - Alert on, 'C' - Alert off, 'N' - Reset, 'X' - Return Tray
DESCRIPTION: Identifies Air Force message command.

OBJECT NAME: AIR FORCE SIDE
DATA TYPE: ALPHANUMBERIC
DATA SIZE: 1
VALUES: 'L' - Left, 'R' - Right
DESCRIPTION: Identifies aisle side of status.

OBJECT NAME: AIR FORCE STATUS
DATA TYPE: ALPHANUMBERIC
DATA SIZE: 4
VALUES:
DESCRIPTION: Identifies Air Force Stacker status.

OBJECT NAME: AIR FORCE TIER
DATA TYPE: ALPHANUMBERIC
DATA SIZE: 2
VALUES:
DESCRIPTION: Tier Number.

OBJECT NAME: AISLE FIRST MODULE
DATA TYPE: ALPHANUMERIC
DATA SIZE: 5
VALUES:
DESCRIPTION: Identifies first loaded module scheduled for this aisle.

OBJECT NAME: AISLE LAST MODULE
DATA TYPE: ALPHANUMBERIC
DATA SIZE: 5
VALUES:
DESCRIPTION: Identifies last loaded module scheduled for this aisle.

OBJECT NAME: AISLE MODE
DATA TYPE: ALPHANUMERIC
DATA SIZE: 1
VALUES: 'P' - Pick, 'S' - Stow, 'L' - Location Survey, 'C' - Inspection
DESCRIPTION: Identifies aisle mode of operation.

OBJECT NAME: AISLE NUMBER
DATA TYPE: ALPHANUMERIC
DATA SIZE: 2
VALUES:
DESCRIPTION: This is a unique identifier for a specific aisle.

OBJECT NAME: AISLE RQST TYPE
DATA TYPE: ALPHANUMBERIC
DATA SIZE: 1
VALUES: 'E' - Empty, 'L' - Loaded, 'N' - None
DESCRIPTION: Identifies last unfulfilled request type.

OBJECT NAME: AISLE STATUS
DATA TYPE: NUMERIC
DATA SIZE: 18
VALUES: 0 = Out of service; 1 = In service
DESCRIPTION: Aisle status for each of the 18 aisles

OBJECT NAME: AISLE TRAVEL TIME
DATA TYPE: NUMERIC
DATA SIZE: 3
VALUES:
DESCRIPTION: Horizontal travel time of last operation

OBJECT NAME: ALAN DIVERT
DATA TYPE: NUMERIC
DATA SIZE: 3
VALUES:
DESCRIPTION: The divert number associated with a lane.

OBJECT NAME: ALAN FULL STATUS
DATA TYPE: ALPHANUMERIC
DATA SIZE: 1
VALUES: ‘Y’-Full, ‘N’-Not Full
DESCRIPTION: The status of a lane, either full or not full.

OBJECT NAME: ALAN LANE ID
DATA TYPE: ALPHANUMERIC
DATA SIZE: 3
VALUES:
DESCRIPTION: The lane ID of an individual lane for a particular AWOS subcontroller and a particular divert number.

OBJECT NAME: ALAN IS REJECT
DATA TYPE: ALPHANUMERIC
DATA SIZE: 1
VALUES: ‘Y’-Is a reject lane ‘ ‘-Isn’t a reject lane
DESCRIPTION: A flag indicating if a given lane is a reject lane.

OBJECT NAME: ALAN IS 10LBS
DATA TYPE: ALPHANUMERIC
DATA SIZE: 1
VALUES: ‘Y’-Is a 10lbs lane ‘ ‘-Isn’t a 10lbs lane
DESCRIPTION: A flag indicating if a given lane is a 10lbs lane.

OBJECT NAME: ALAN SUBCONTROLLER
DATA TYPE: ALPHANUMERIC
DATA SIZE: 5
VALUES:
DESCRIPTION: The AWOS subcontroller a lane is associated with.

OBJECT NAME: ALERT TEXT
DATA TYPE: ALPHANUMERIC
DATA SIZE: 2
VALUES:
DESCRIPTION: This text contains a code for the alert message.

OBJECT NAME: ALERT TEXT2
DATA TYPE: ALPHANUMERIC
DATA SIZE: 128
VALUES:
DESCRIPTION: This text contains nature of alert being announced.

OBJECT NAME:	ALERT WARNING
DATA TYPE:	ALPHANUMERIC
DATA SIZE:	10
VALUES:	
DESCRIPTION:	This text contains the description of the alert being announced.

OBJECT NAME:	ALTERNATE DESTINATION
DATA TYPE:	ALPHANUMERIC
DATA SIZE:	9
VALUES:	
DESCRIPTION:	The destination for the movement request. Represents a functional area or workstation of the warehouse.

OBJECT NAME:	AREA CODE
DATA TYPE:	CHARACTER
DATA SIZE:	1
VALUES:	'A' - Exception Reduction, 'B' - PPP&M Research, 'C' - Consolidation, 'H' - High Rise Storage (200 - 229, 300 - 329, 400 - 429, 500 - 529), 'L' - Less Than Truckload (013 - 018), 'M' - PPP&M (019 - 027), 'N' - Consolidation STG, 'P' - Pallet Storage (700 - 787), 'R' - Module Load (001 - 012), 'S' - Staging (Mod Lod 100 - 152, PPP&M 153 - 175), 'T' - Shipping (660 - 673), 'W' Maintenance (650 - 651), 'X' - Packing Exception, ‘1’ - Receiving Area, ‘2’ - Storage Area, ‘4’ - Sortation/Consolidation and Packing Area, ‘5’ - Shipping Area
DESCRIPTION:	Pick and Delivery Area Code

OBJECT NAME:	AREA FIRST EMPTY
DATA TYPE:	CHARACTER
DATA SIZE:	3
VALUES:	
DESCRIPTION:	First empty pickup and delivery stand in the area.

OBJECT NAME:	AREA LAST EMPTY
DATA TYPE:	CHARACTER
DATA SIZE:	3
VALUES:	
DESCRIPTION:	Last empty pickup and delivery stand in the area.

OBJECT NAME:	ARRIVAL ZONE NUMBER
DATA TYPE:	NUMERIC
DATA SIZE:	3
VALUES:	
DESCRIPTION:	Arrival conveyor zone number

OBJECT NAME: ASAQ SPAL ID
DATA TYPE: ALPHANUMERIC
DATA SIZE: 7
VALUES:
DESCRIPTION: Pallet ID for aisle queue

OBJECT NAME: ASAQ CATEGORY
DATA TYPE: ALPHANUMERIC
DATA SIZE: 1
VALUES:
DESCRIPTION: Category of work to be done

OBJECT NAME: ASAQ DEST
DATA TYPE: ALPHANUMERIC
DATA SIZE: 9
VALUES:
DESCRIPTION: destination of pallet in aisle queue

OBJECT NAME: ASAQ TIMESTAMP
DATA TYPE: NUMERIC
DATA SIZE: 1
VALUES:
DESCRIPTION: timestamp of aisle queue record creation

OBJECT NAME: ASAQ AISLE
DATA TYPE: NUMERIC
DATA SIZE: 1
VALUES:
DESCRIPTION: aisle of pallet in aisle queue

OBJECT NAME: ASAQ AMVE CON NO
DATA TYPE: ALPHANUMERIC
DATA SIZE: 7
VALUES:
DESCRIPTION: control number of pallet in aisle queue

OBJECT NAME: ASAQ GIVEN TO CRANE
DATA TYPE: ALPHANUMERIC
DATA SIZE: 1
VALUES:
DESCRIPTION: indicator if pallet in aisle queue has had processing begun by crane

OBJECT NAME: ASAQ DEPOSIT BEGUN
DATA TYPE: ALPHANUMERIC
DATA SIZE: 1
VALUES:
DESCRIPTION: indicator if pallet has had crane deposit begun

OBJECT NAME: ASAQ PRIORITY
DATA TYPE: ALPHANUMERIC
DATA SIZE: 1
VALUES:
DESCRIPTION: priority for pallet in aisle queue

OBJECT NAME: ASAQ SUN
DATA TYPE: ALPHANUMERIC
DATA SIZE: 15
VALUES:
DESCRIPTION: Shipment Unit Number (SUN), if any, for a pallet

OBJECT NAME: ASAQ SRC
DATA TYPE: ALPHANUMERIC
DATA SIZE: 9
VALUES:
DESCRIPTION: Source of pallet in aisle queue

OBJECT NAME: ASAQ EMERGENCY
DATA TYPE: ALPHANUMERIC
DATA SIZE: 1
VALUES:
DESCRIPTION: Emergency pick indicator for pallet in aisle queue

OBJECT NAME: ASRS ID
DATA TYPE: NUMERIC
DATA SIZE: 2
VALUES: 01-04 at DDNV
DESCRIPTION: Indicates the aisle number of the ASRS system

OBJECT NAME: ASRS CRANE ID
DATA TYPE: NUMERIC
DATA SIZE: 2
VALUES: 01-04 at DDNV
DESCRIPTION: Indicates the crane number in the aisle of the ASRS system. At DDNV, the ASRS ID is the same as the ASRS CRANE ID because the cranes cannot move from aisle to aisle.

OBJECT NAME: ASRS SPAL ID
DATA TYPE: NUMERIC
DATA SIZE: 7
VALUES: See SPAL ID
DESCRIPTION: Indicates the slave pallet ID in an active pick or stow operation. At DDNV, this ASRS system is mapped (that is, all slave pallet IDs are the same as the TRIAX LOCATION field.

OBJECT NAME: ASRS CON NO
DATA TYPE: ALPHANUMERIC
DATA SIZE: 7
VALUES:
DESCRIPTION: Control number associated with a store or retrieve from an ASRS.

OBJECT NAME: ASRS MODE
DATA TYPE: ALPHANUMERIC
DATA SIZE: 1
VALUES:
DESCRIPTION: Mode associated with an aisle

OBJECT NAME: ASRS LOG STA
DATA TYPE: ALPHANUMERIC
DATA SIZE: 1
VALUES:
DESCRIPTION: Logical status for aisle.

OBJECT NAME: ASRS PHY STA
DATA TYPE: ALPHANUMERIC
DATA SIZE: 1
VALUES:
DESCRIPTION: Physical status for an aisle.

OBJECT NAME: ASRS POLLING INTVL
DATA TYPE: NUMERIC
DATA SIZE: 1
VALUES:
DESCRIPTION: Interval used to poll cranes for status

OBJECT NAME: ASRS ERR POLLING INTERVAL
DATA TYPE: NUMERIC
DATA SIZE: 1
VALUES:
DESCRIPTION: Interval used to note ASRS error conditions

OBJECT NAME: ASRS SRC LOC
DATA TYPE: ALPHANUMERIC
DATA SIZE: 7
VALUES:
DESCRIPTION: Source Location.

OBJECT NAME: ASRS INTR LOC
DATA TYPE: ALPHANUMERIC
DATA SIZE: 7
VALUES:
DESCRIPTION: Intermediate destination location

OBJECT NAME: ASRS DST LOC
DATA TYPE: ALPHANUMERIC
DATA SIZE: 7
VALUES:
DESCRIPTION: Destination location.

OBJECT NAME: ASRS CUR LOC
DATA TYPE: ALPHANUMERIC
DATA SIZE: 7
VALUES:
DESCRIPTION: Current location

OBJECT NAME: ASRS ERR
DATA TYPE: ALPHANUMERIC
DATA SIZE: 2
VALUES:
DESCRIPTION: Error description

OBJECT NAME: ASRS TIMESTAMP
DATA TYPE: NUMERIC
DATA SIZE: 1
VALUES:
DESCRIPTION: Timestamp of last ASRS activity

OBJECT NAME: ASRS IN OUT DEST
DATA TYPE: ALPHANUMERIC
DATA SIZE: 9
VALUES:
DESCRIPTION: Future non-storage destination of pallet enroute to a storage location

OBJECT NAME: ASRS IN OUT TYPE
DATA TYPE: ALPHANUMERIC
DATA SIZE: 1
VALUES:
DESCRIPTION: Type of future work to be done on a pallet

OBJECT NAME: ASRS LOC INBOUND
DATA TYPE: ALPHANUMERIC
DATA SIZE: 7
VALUES:
DESCRIPTION: Inbound location

OBJECT NAME: ASRS LOC OUTBOUND
DATA TYPE: ALPHANUMERIC
DATA SIZE: 7
VALUES:
DESCRIPTION: Outbound location

OBJECT NAME: ASRS COMMAND LAST
DATA TYPE: ALPHANUMERIC
DATA SIZE: 2
VALUES:
DESCRIPTION: Previous ASRS command

OBJECT NAME: ASRS COMMAND CURR
DATA TYPE: ALPHANUMERIC
DATA SIZE: 2
VALUES:
DESCRIPTION: Current ASRS command

OBJECT NAME: ASRS COMMAND NEXT
DATA TYPE: ALPHANUMERIC
DATA SIZE: 2
VALUES:
DESCRIPTION: Next ASRS command

OBJECT NAME: ASWQ SPAL ID
DATA TYPE: ALPHANUMERIC
DATA SIZE: 7
VALUES:
DESCRIPTION: ID of pallet in workstation queue

OBJECT NAME: ASWQ CATEGORY
DATA TYPE: ALPHANUMERIC
DATA SIZE: 1
VALUES:
DESCRIPTION: Category of pallet in workstation queue

OBJECT NAME: ASWQ DEST
DATA TYPE: ALPHANUMERIC
DATA SIZE: 9
VALUES:
DESCRIPTION: Destination for pallet in workstation queue

OBJECT NAME: ASWQ TIMESTAMP
DATA TYPE: NUMERIC
DATA SIZE: 1
VALUES:
DESCRIPTION: Timestamp of activity for pallet in workstation queue

OBJECT NAME: ASWQ SUN
DATA TYPE: ALPHANUMERIC
DATA SIZE: 15
VALUES:
DESCRIPTION: Shipment Unit Number (SUN), if any, for pallet in workstation queue

OBJECT NAME: ASWQ SRC
DATA TYPE: ALPHANUMERIC
DATA SIZE: 9
VALUES:
DESCRIPTION: Source location for pallet in workstation queue

OBJECT NAME: ASWQ EMERGENCY
DATA TYPE: ALPHANUMERIC
DATA SIZE: 1
VALUES:
DESCRIPTION: Emergency pick indicator for pallet in workstation queue

OBJECT NAME: ASYNC OR POLLED
DATA TYPE: CHARACTER
DATA SIZE: 1
VALUES: 'A' (Async), 'P' (Polled)
DESCRIPTION: Indicates the state of the carousel.

OBJECT NAME: AUTO MANUAL INDICATOR
DATA TYPE: CHARACTER
DATA SIZE: 1
VALUES: 'A' (Auto), 'M' (Manual)
DESCRIPTION: Indicates the state of the carousel.

OBJECT NAME: AUTO MODE INDICATOR
DATA TYPE: NUMERIC
DATA SIZE: 1
VALUES: 0 = False; 1 = True
DESCRIPTION: Indicates where automatic or manual mode is in effect for an SR/M

OBJECT NAME: AWOS CON NO
DATA TYPE: ALPHANUMERIC
DATA SIZE: 7
VALUES:
DESCRIPTION: The control number associated with material being shipped.

OBJECT NAME: AWOS CUBE
DATA TYPE: ALPHANUMERIC
DATA SIZE: 4
VALUES:
DESCRIPTION: Cubic dimensions of a package.

OBJECT NAME: AWOS DEST1
DATA TYPE: ALPHANUMERIC
DATA SIZE: 3
VALUES:
DESCRIPTION: The first lane destination of a package.

OBJECT NAME: AWOS DEST2
DATA TYPE: ALPHANUMERIC
DATA SIZE: 3
VALUES:
DESCRIPTION: The second lane destination of a package.

OBJECT NAME: AWOS DEST3
DATA TYPE: ALPHANUMERIC
DATA SIZE: 3
VALUES:
DESCRIPTION: The third lane destination of a package.

OBJECT NAME: AWOS HEIGHT
DATA TYPE: ALPHANUMERIC
DATA SIZE: 2
VALUES:
DESCRIPTION: The height of a package.

OBJECT NAME: AWOS LENGTH
DATA TYPE: ALPHANUMERIC
DATA SIZE: 2
VALUES:
DESCRIPTION: The length of a package.

OBJECT NAME: AWOS RECEIVE TIME
DATA TYPE: DATE
DATA SIZE: 1
VALUES:
DESCRIPTION: The date lane information was received from DSS.

OBJECT NAME: AWOS TRANSMIT TIME
DATA TYPE: DATE
DATA SIZE: 1
VALUES:
DESCRIPTION: The date package information was transmitted to DSS.

OBJECT NAME: AWOS WEIGHT
DATA TYPE: NUMERIC
DATA SIZE: 6
VALUES:
DESCRIPTION: The weight of a package.

OBJECT NAME: AWOS WIDTH
DATA TYPE: ALPHANUMERIC
DATA SIZE: 2
VALUES:
DESCRIPTION: The width of a package.

OBJECT NAME: BACKUP AVAILABLE FLAG
DATA TYPE: CHARACTER
DATA SIZE: 1
VALUES: 'Y', 'N'
DESCRIPTION: Indicates if backup PC is available.

OBJECT NAME: BATTERY LOW INDICATOR
DATA TYPE: NUMERIC
DATA SIZE: 1
VALUES: 0 = False; 1 = True
DESCRIPTION: Indicator specifying if battery is low

OBJECT NAME: BAY
DATA TYPE: NUMERIC
DATA SIZE: 3
VALUES:
DESCRIPTION: Bay for a storage location

OBJECT NAME: BIN CHARACTER
DATA TYPE: CHARACTER
DATA SIZE: 1
VALUES: 'B'
DESCRIPTION: Carousel command to set the current bin to a new index.

OBJECT NAME: BIN NUMBER SETTING
DATA TYPE: NUMERIC
DATA SIZE: 3
VALUES:
DESCRIPTION: Index of current bin.

OBJECT NAME: BODY LENGTH
DATA TYPE: NUMERIC
DATA SIZE: 4
VALUES:
DESCRIPTION: The length, in bytes, of the body of a transaction.

OBJECT NAME: CAROUSEL CN
DATA TYPE: ALPHANUMERIC
DATA SIZE: 7
VALUES:
DESCRIPTION: Carousel location contained control number.

OBJECT NAME: CAROUSEL CONSOLIDATION FLD
DATA TYPE: ALPHANUMERIC
DATA SIZE: 15
VALUES:
DESCRIPTION: Shipment unit for pack consolidation, aisle area for receiving.

OBJECT NAME: CAROUSEL E/O IND
DATA TYPE: ALPHANUMERIC
DATA SIZE: 1
VALUES: 'E' - Empty, 'O' - Occupied
DESCRIPTION: Packing or receiving indicator.

OBJECT NAME: CAROUSEL LOCATION
DATA TYPE: ALPHANUMERIC
DATA SIZE: 4
VALUES:
DESCRIPTION: Carousel Location, contains CAROUSEL NO., SEGMENT and TIER.

OBJECT NAME: CAROUSEL NO.
DATA TYPE: ALPHANUMERIC
DATA SIZE: 1
VALUES:
DESCRIPTION: Carousel Number.

OBJECT NAME: CAROUSEL P/R IND
DATA TYPE: ALPHANUMERIC
DATA SIZE: 1
VALUES: 'P' - Packing, 'R' - Receiving
DESCRIPTION: Packing or receiving indicator.

OBJECT NAME: CAROUSEL SIZE
DATA TYPE: NUMERIC
DATA SIZE: 3
VALUES:
DESCRIPTION: Indicates size of carousel.

OBJECT NAME: CAROUSEL STATUS
DATA TYPE: CHARACTER
DATA SIZE: 1
VALUES: 'Y' (last go successful), 'F' (last go unsuccessful), 'I' (last go in progress), 'J' (carousel being jogged), 'B' and 'S' (carousel stopping), 'U' (carousel not yet moved).
DESCRIPTION: Indicates status of carousel.

OBJECT NAME: CAROUSEL TOTE ID
DATA TYPE: ALPHANUMERIC
DATA SIZE: 7
VALUES:
DESCRIPTION: Carousel stored tote ID.

OBJECT NAME: CAROUSEL WON'T MOVE ERROR
DATA TYPE: NUMERIC
DATA SIZE: 5
VALUES:
DESCRIPTION: Number of carousel won't move errors.

OBJECT NAME: CARRIAGE HOME INDICATOR
DATA TYPE: NUMERIC
DATA SIZE: 1
VALUES: 0 = False; 1 = True
DESCRIPTION: Indicator specifying is carriage is in the home position

OBJECT NAME: CARRIAGE RETURN CHARACTER
DATA TYPE: CHARACTER
DATA SIZE: 1
VALUES: <CR>
DESCRIPTION: Carriage return character.

OBJECT NAME: CART DESTINATIONS
DATA TYPE: BYTE
DATA SIZE: 2400
VALUES:
DESCRIPTION: The destination for each cart.

OBJECT NAME: CART ID
DATA TYPE: ALPHANUMERIC
DATA SIZE: 4
VALUES:
DESCRIPTION: The ID of a cart.

OBJECT NAME: CART ID5
DATA TYPE: ALPHANUMERIC
DATA SIZE: 7
VALUES:
DESCRIPTION: The ID of a cart.

OBJECT NAME: CARQ TYPE
DATA TYPE: CHARACTER
DATA SIZE: 2
VALUES:
DESCRIPTION: Empty requests, empty cart and M/H pack management queues.

OBJECT NAME: CART CART TY
DATA TYPE: CHARACTER
DATA SIZE: 1
VALUES:
DESCRIPTION: Indicates the type of towline cart.

OBJECT NAME: CART TYPE
DATA TYPE: ALPHANUMERIC
DATA SIZE: 2
VALUES:
DESCRIPTION: The type of towline cart.

OBJECT NAME: CHAIN CONV 1-8
DATA TYPE: ALPHANUMERIC
DATA SIZE: 7
VALUES:
DESCRIPTION: One of up to eight conveyances in the chain.

OBJECT NAME: CHAIN ID
DATA TYPE: NUMERIC
DATA SIZE: 3
VALUES:
DESCRIPTION: The chain ID to which the conveyance is assigned.

OBJECT NAME: CHAIN LENGTH
DATA TYPE: NUMERIC
DATA SIZE: 1
VALUES: 2-4
DESCRIPTION: Number of totes or carts in a chain.

OBJECT NAME: CHAIN NO ARRIVED
DATA TYPE: NUMERIC
DATA SIZE: 4
VALUES:
DESCRIPTION: Number of conveyances in the chain that have arrived.

OBJECT NAME: CHAIN NUMBER IN
DATA TYPE: NUMERIC
DATA SIZE: 1
VALUES: 1 - 8
DESCRIPTION: The number of items in the chain.

OBJECT NAME: CHAIN REL INDIC
DATA TYPE: CHARACTER
DATA SIZE: 1
VALUES:
DESCRIPTION: The indicator for a chain release.

OBJECT NAME: CHAIN SPUR ID
DATA TYPE: CHARACTER
DATA SIZE: 4
VALUES:
DESCRIPTION: The spur identification number.

OBJECT NAME: CHAIN STRUCTURE
DATA TYPE: NUMERIC
DATA SIZE: 4
VALUES:
DESCRIPTION: The chain ID to which the conveyance is assigned.

OBJECT NAME: CHANGE IND
DATA TYPE: ALPHANUMERIC
DATA SIZE: 1
VALUES:
DESCRIPTION: The change indicator for a workstation status.

OBJECT NAME: CHECKSUM
DATA TYPE: NUMERIC
DATA SIZE: 2
VALUES:
DESCRIPTION: Sum of all characters in message string

OBJECT NAME: CHECKSUM3
DATA TYPE: NUMERIC
DATA SIZE: 3
VALUES:
DESCRIPTION: Sum of all character values in message string

OBJECT NAME: CHUTE ID
DATA TYPE: ALPHANUMERIC
DATA SIZE: 4
VALUES:
DESCRIPTION: The identification assigned to a chute.

OBJECT NAME: CHUTE ID3
DATA TYPE: ALPHANUMERIC
DATA SIZE: 3
VALUES:
DESCRIPTION: The identification assigned to a chute.

OBJECT NAME: CHUTE PACK AREA
DATA TYPE: CHARACTER
DATA SIZE: 1
VALUES:
DESCRIPTION: Identifies the pack area where the chute resides.

OBJECT NAME: CHUTE TOTAL PKG
DATA TYPE: NUMERIC
DATA SIZE: 3
VALUES:
DESCRIPTION: Stores the total number of packages that have dropped down a chute while the sorter subcontroller has been running.

OBJECT NAME: CHUTE TYPE
DATA TYPE: CHARACTER
DATA SIZE: 1
VALUES: ‘C’ (CCP sorter), ‘M’ (Mission sorter)
DESCRIPTION: Indicates whether a chute is part of the CCP or the Mission sorter.

OBJECT NAME: CICS DELAY COMMAND STRING
DATA TYPE: CHARACTER
DATA SIZE: 24
VALUES: "EXEC CICS DELAY INTERVAL"
DESCRIPTION: This CICS command is Literal constant string followed by the CICS DELAY TIME. This command is used to suspend processing of the issuing task for the specified time interval.

OBJECT NAME:	CICS DELAY TIME
DATA TYPE:	ALPHANUMERIC
DATA SIZE:	8
VALUES:	'(HHMMSS)'
DESCRIPTION:	Parameter for CICS DELAY which is the time in HHMMSS format. Note that the parentheses are required.

OBJECT NAME:	CICS P195 RECORD ID CODE
DATA TYPE:	ALPHANUMERIC
DATA SIZE:	4
VALUES:	'P195'
DESCRIPTION:	This code is the literal string to identify the P195 Parameter Record within the Parameter File.

OBJECT NAME:	CICS P195 ECS ACTIVE FLAG
DATA TYPE:	CHARACTER
DATA SIZE:	1
VALUES:	'Y' (Yes), 'N' (No)
DESCRIPTION:	This is the ECS active/inactive flag for the P195 Parameter file.

OBJECT NAME:	CICS SESSION ERROR STRING
DATA TYPE:	CHARACTER
DATA SIZE:	28
VALUES:	'SECS SESSION ALLOCATION ERROR'
DESCRIPTION:	This message is displayed on the System Console and/or the ECS Control terminal when process SECS or SECR fails to connect to the ECS Traffic Controller.

OBJECT NAME:	CICS START COMMAND STRING
DATA TYPE:	CHARACTER
DATA SIZE:	23
VALUES:	'EXEC CICS START TRANSID'
DESCRIPTION:	This CICS command is Literal constant string followed by the CICS START NAME. This command is used to start a task within CICS.

OBJECT NAME:	CICS START NAME
DATA TYPE:	ALPHANUMERIC
DATA SIZE:	6
VALUES:	'(SECS)', '(SECR)'
DESCRIPTION:	Parameter for CICS START which is the process name to start:SECS (ECS send) and SECR (ECS Receive). Note that the parentheses are required.

OBJECT NAME: COLLISIONS
DATA TYPE: NUMERIC
DATA SIZE: 5
VALUES:
DESCRIPTION: Number of message collisions.

OBJECT NAME: COMMAND CODE
DATA TYPE: ALPHANUMERIC
DATA SIZE: 1
VALUES:
DESCRIPTION: Field used to provide extra information about a message.

OBJECT NAME: COMMAND DONE INDICATOR
DATA TYPE: NUMERIC
DATA SIZE: 1
VALUES: 0 = False; 1 = True
DESCRIPTION: Indicator specifying if command if finished

OBJECT NAME: COMMAND NUMBER
DATA TYPE: NUMERIC
DATA SIZE: 2
VALUES: any
DESCRIPTION: Indicates category of command

OBJECT NAME: COMMAND TYPE
DATA TYPE: ALPHA
DATA SIZE: 2
VALUES: AK, DP, DT, FA, KL, MV, NK, PD, PK, QR, SR, SS, ST,SU, SZ, TA, TE, TM, TR, TS, TU
DESCRIPTION: Stacker/Conveyor command mnemonic

OBJECT NAME: CONFIG CONFIGURATION
DATA TYPE: CHARACTER
DATA SIZE: variable
VALUES:
DESCRIPTION: The configuration of the Towline PLCs.

OBJECT NAME: CONFIG DATE
DATA TYPE: DATE
DATA SIZE:
VALUES:
DESCRIPTION: The date associated with the configuration file.

OBJECT NAME: CONFIG MHE TYPE
DATA TYPE: CHARACTER
DATA SIZE: 1
VALUES:
DESCRIPTION: The configuration MHE type.

OBJECT NAME: CONFIG SUBZONE NUMBER
DATA TYPE: CHARACTER
DATA SIZE: 2
VALUES:
DESCRIPTION: The configuration subzone number.

OBJECT NAME: CONFIG TIME
DATA TYPE: TIME
DATA SIZE:
VALUES:
DESCRIPTION: The time associated with the configuration file.

OBJECT NAME: CONFIG ZONE
DATA TYPE: CHARACTER
DATA SIZE: 2
VALUES:
DESCRIPTION: The configuration subzone number.

OBJECT NAME: CONSOLIDATION DTE
DATA TYPE: DATE
DATA SIZE: 8
VALUES:
DESCRIPTION: Date consolidation group began.

OBJECT NAME: CONSOLIDATION FLD
DATA TYPE: ALPHANUMERIC
DATA SIZE: 15
VALUES:
DESCRIPTION: Aisle area for receiving, shipment unit for packing.
OBJECT NAME: CONSOLIDATION NUMBER IN
DATA TYPE: NUMERIC
DATA SIZE: 4
VALUES:
DESCRIPTION: Number of items accumulated in the consolidation grouping.

OBJECT NAME: CONTROL NUMBER
DATA TYPE: ALPHANUMERIC
DATA SIZE: 7
VALUES:
DESCRIPTION: The identification number assigned to and associated with material.

OBJECT NAME: CONTROLLER ID
DATA TYPE: ALPHANUMERIC
DATA SIZE: 2
VALUES: 0-9, A-F
DESCRIPTION: Controller Identifier

OBJECT NAME: CONV AREA
DATA TYPE: ALPHANUMERIC
DATA SIZE: 4
VALUES:
DESCRIPTION: The move area.

OBJECT NAME: CONV CHAIN ID
DATA TYPE: ALPHANUMERIC
DATA SIZE: 4
VALUES:
DESCRIPTION: The chain identification number.

OBJECT NAME: CONV CON NO
DATA TYPE: ALPHANUMERIC
DATA SIZE: 7
VALUES:
DESCRIPTION: The control number.

OBJECT NAME: CONV CONVEY ID
DATA TYPE: ALPHANUMERIC
DATA SIZE: 7
VALUES:
DESCRIPTION: The conveyance identification (either the Cart ID or the Tote ID).

OBJECT NAME: CONV CONVEY TY
DATA TYPE: ALPHANUMERIC
DATA SIZE: 2
VALUES:
DESCRIPTION: The conveyance type.

OBJECT NAME: CONV CTYP
DATA TYPE: CHARACTER
DATA SIZE: 1
VALUES:
DESCRIPTION: The conveyance cart type.

OBJECT NAME: CONV FNL DEST
DATA TYPE: ALPHANUMERIC
DATA SIZE: 4
VALUES:
DESCRIPTION: The final destination

OBJECT NAME: CONV KEY
DATA TYPE: NUMERIC
DATA SIZE: 3
VALUES: 001
DESCRIPTION: The conveyor ID

OBJECT NAME: CONV NEXT DEST
DATA TYPE: ALPHANUMERIC
DATA SIZE: 4
VALUES:
DESCRIPTION: The next destination on the route of a towline cart.

OBJECT NAME: CONV PRES LOC
DATA TYPE: ALPHANUMERIC
DATA SIZE: 4
VALUES:
DESCRIPTION: The present location.

OBJECT NAME: CONV STA
DATA TYPE: CHARACTER
DATA SIZE: 1
VALUES:
DESCRIPTION: The status indicator for the conveyance.

OBJECT NAME: CONV_STAT
DATA TYPE: ALPHA
DATA SIZE: 3
VALUES: IMT, AMT; For TRXDB, ‘ONL’, ‘OFL’
DESCRIPTION: Status of Entire Conveyor System

OBJECT NAME: CONV_TRACKING_USER
DATA TYPE: ALPHA
DATA SIZE: 5
VALUES: USE01-USE99
DESCRIPTION: UI Currently running Edit Tracking Data screen

OBJECT NAME: CONV_TRAN_NR_FR_ID
DATA TYPE: NUMERIC
DATA SIZE: 4
VALUES:
DESCRIPTION: Current outbound message tran ID

OBJECT NAME: CONV_TRAN_NR_TO_ID
DATA TYPE: NUMERIC
DATA SIZE: 4
VALUES:
DESCRIPTION: Current inbound message tran ID

OBJECT NAME: CONVEYANCE ID5
DATA TYPE: ALPHANUMERIC
DATA SIZE: 5
VALUES:
DESCRIPTION: The conveyance ID of the item for which movement is requested.

OBJECT NAME: CONVEYANCE ID
DATA TYPE: ALPHANUMERIC
DATA SIZE: 7
VALUES:
DESCRIPTION: The conveyance ID of the item for which movement is requested.

OBJECT NAME: CONVEYOR MAP
DATA TYPE: BYTE
DATA SIZE: 1
VALUES:
DESCRIPTION: The configuration for the inbound/outbound lanes at Intradepot Receiving.

OBJECT NAME: CONVEYOR SECT
DATA TYPE: NUMERIC
DATA SIZE: 3
VALUES:
DESCRIPTION: Conveyor Control Section Number

OBJECT NAME: CONVEYOR STATUS
DATA TYPE: ALPHA
DATA SIZE: 3
VALUES: AMT = Allow Material Movement
BMT = Bypass Material Movement
IMT = Inhibit Material Movement
DESCRIPTION: Status of conveyor system

OBJECT NAME: COUNT
DATA TYPE: ALPHANUMERIC
DATA SIZE: 1
VALUES:
DESCRIPTION: The number of carts in the lanes at M/H Pack.

OBJECT NAME: CRANE COMMAND
DATA TYPE: NUMERIC
DATA SIZE: 1
VALUES: 1 = Deposit; 2 = pickup
DESCRIPTION: Simulated crane command

OBJECT NAME: CRANE P&D ZONE
DATA TYPE: NUMERIC
DATA SIZE: 3
VALUES:
DESCRIPTION: Crane/Conveyor P&D interface zone

OBJECT NAME: CRANE STATE
DATA TYPE: CHARACTER
DATA SIZE: 1
VALUES: 'A' (Automatic), 'O' (Off), 'M' (Manual), 'F' (Fault)
DESCRIPTION: Current state of the crane.

OBJECT NAME: CSF AISLE
DATA TYPE: NUMERIC
DATA SIZE: 2
VALUES: 0-18
DESCRIPTION: Aisle Number for CSF System

OBJECT NAME: CURRENT BAY POSITION
DATA TYPE: NUMERIC
DATA SIZE: 3
VALUES:
DESCRIPTION: Current bay position of shuttle

OBJECT NAME: CURRENT DESTINATION
DATA TYPE: ALPHANUMERIC
DATA SIZE: 3
VALUES:
DESCRIPTION: The current destination of the item. Represents a functional area or workstation of the warehouse.

OBJECT NAME: CURRENT HOIST POSITION
DATA TYPE: NUMERIC
DATA SIZE: 2
VALUES:
DESCRIPTION: Current tier location of shuttle

OBJECT NAME: CURRENT POSITION 1ST STATION
DATA TYPE: NUMERIC
DATA SIZE: 3
VALUES:
DESCRIPTION: Current bin position at the 1st station.

OBJECT NAME: CURRENT POSITION 2ND STATION
DATA TYPE: NUMERIC
DATA SIZE: 3
VALUES:
DESCRIPTION: Current bin position at the 2nd station.

OBJECT NAME: CURRENT ZONE NUMBER
DATA TYPE: NUMERIC
DATA SIZE: 3
VALUES:
DESCRIPTION: Current conveyor zone number

OBJECT NAME: DATETIME STAMP
DATA TYPE: BINARY
DATA SIZE: 8
VALUES:
DESCRIPTION: The date and time the SMM was received by the ECS from DSS.

OBJECT NAME: DCAR AREA
DATA TYPE: CHARACTER
DATA SIZE: 1
VALUES: ‘1’ (Receiving Area), ‘2’ (Storage Area),
‘4’ (Sortation/Consolidation and Packing Area), ‘5’ (Shipping Area)
DESCRIPTION: Identifies the area in the EDC.

OBJECT NAME: DEPOT PROPERTY STATION
DATA TYPE: BYTE
DATA SIZE: 1
VALUES:
DESCRIPTION: A bitmap configuration for a workstation that performs depot property inspection.

OBJECT NAME: DESTINATION
DATA TYPE: ALPHANUMERIC
DATA SIZE: 4
VALUES:
DESCRIPTION: The destination for the movement request. Represents a functional area or workstation of the warehouse.

OBJECT NAME: DESTINATION3
DATA TYPE: ALPHANUMERIC
DATA SIZE: 3
VALUES:
DESCRIPTION: The destination for the movement request. Represents a functional area or workstation of the warehouse.

OBJECT NAME:	DESTINATION9
DATA TYPE:	ALPHANUMERIC
DATA SIZE:	9
VALUES:	
DESCRIPTION:	The destination for the movement request. Represents a functional area or workstation of the warehouse.

OBJECT NAME:	DESTINATION BAY
DATA TYPE:	NUMERIC
DATA SIZE:	3
VALUES:	001 - 074 or 000 if not used
DESCRIPTION:	Number of bay within the aisle

OBJECT NAME:	DESTINATION LEVEL
DATA TYPE:	NUMERIC
DATA SIZE:	2
VALUES:	01 - 08 or 00 if not used
DESCRIPTION:	Number of the tier within the aisle

OBJECT NAME:	DESTINATION P&D
DATA TYPE:	NUMERIC
DATA SIZE:	2
VALUES:	01 or 02 or 00 if not used
DESCRIPTION:	Stacker output P&D stand number

OBJECT NAME:	DESTINATION SIDE
DATA TYPE:	ALPHA
DATA SIZE:	1
VALUES:	A, B, C, D or blank if not used
DESCRIPTION:	Combination of left or right side and near or deep position

OBJECT NAME:	DESTINATIONX
DATA TYPE:	ALPHANUMERIC
DATA SIZE:	Variable
VALUES:	
DESCRIPTION:	The destination for the movement request.

OBJECT NAME:	DESTINATION ZONE NUMBER
DATA TYPE:	NUMERIC
DATA SIZE:	3
VALUES:	
DESCRIPTION	Zone number of conveyor destination

OBJECT NAME:	DEVICE
DATA TYPE:	ALPHANUMERIC
DATA SIZE:	2
VALUES:	
DESCRIPTION:	Two digit device number.

OBJECT NAME:	DEVICE ID
DATA TYPE:	ALPHANUMERIC
DATA SIZE:	3
VALUES:	
DESCRIPTION:	AWOS device (communication link) identifier.

OBJECT NAME:	DEVICE NUMBER
DATA TYPE:	NUMERIC
DATA SIZE:	3
VALUES:	
DESCRIPTION:	Three digit device number.

OBJECT NAME:	DEVICE TYPE
DATA TYPE:	CHARACTER
DATA SIZE:	3
VALUES:	'ABP','AGV', 'CAR', 'STK', 'NLS', 'SIZ',
DESCRIPTION:	Three digit device type indicator.

OBJECT NAME:	DIRECTION FLAG
DATA TYPE:	CHARACTER
DATA SIZE:	1
VALUES:	'L' (Left), 'R' (Right)
DESCRIPTION:	Indicates which direction the Carousel is directed to move.

OBJECT NAME:	DISCRETE TRANSITION
DATA TYPE:	NUMERIC
DATA SIZE:	1
VALUES:	0 = low = load clear 1 = high = load present
DESCRIPTION:	State or transition of a discrete

OBJECT NAME:	DIVERT
DATA TYPE:	CHARACTER
DATA SIZE:	1
VALUES:	'1', '2','3'
DESCRIPTION:	Indicates which divert a reject lane is associated

OBJECT NAME:	DIVERT FLAG
DATA TYPE:	CHARACTER
DATA SIZE:	1
VALUES:	'Y', 'N'
DESCRIPTION:	Indicates whether trays can be diverted to this workstation.

OBJECT NAME:	DLE
DATA TYPE:	ALPHANUMERIC
DATA SIZE:	1
VALUES:	<DLE>
DESCRIPTION:	Delimiter Character

OBJECT NAME:	DPI BARCODE
DATA TYPE:	ALPHANUMERIC
DATA SIZE:	7
VALUES:	
DESCRIPTION:	Pick Control Number or Tote ID

OBJECT NAME:	DPI DIVERT
DATA TYPE:	ALPHANUMERIC
DATA SIZE:	3
VALUES:	101-103, 201-211, 301-311
DESCRIPTION:	Divert to destination ID

OBJECT NAME:	DPI SCANNER ID
DATA TYPE:	ALPHANUMERIC
DATA SIZE:	3
VALUES:	001-004
DESCRIPTION:	DPI Scanner ID

OBJECT NAME:	E/O INDICATOR
DATA TYPE:	ALPHANUMERIC
DATA SIZE:	1
VALUES:	E or O
DESCRIPTION:	Empty or Occupied Indicator.

OBJECT NAME:	EDM WARMED INDICATOR
DATA TYPE:	NUMERIC
DATA SIZE:	1
VALUES:	0 = False; 1 = True
DESCRIPTION:	Indicator specifying if Electronic Distance Meter (EDM) is warmed

OBJECT NAME: ELAPSED TIME
DATA TYPE: NUMERIC
DATA SIZE: 4
VALUES:
DESCRIPTION: Elapsed time in minutes.

OBJECT NAME: END OF TEXT CHARACTER
DATA TYPE: CHARACTER
DATA SIZE: 1
VALUES: <ETX>
DESCRIPTION: End of text character.

OBJECT NAME: END OF TRANSMISSION CHARACTER
DATA TYPE: ALPHANUMERIC
DATA SIZE: 1
VALUES: <EOT>
DESCRIPTION: End of transmissions character.

OBJECT NAME: ENQUEUE CHARACTER
DATA TYPE: ALPHANUMERIC
DATA SIZE: 1
VALUES: <ENQ>
DESCRIPTION: Enqueue character.

OBJECT NAME: ENROUTE
DATA TYPE: ALPHANUMERIC
DATA SIZE: 1
VALUES:
DESCRIPTION: The number of carts enroute to the lanes at M/H Pack.

OBJECT NAME: EPLO WRHS LOC
DATA TYPE: CHARACTER
DATA SIZE: 9
VALUES:
DESCRIPTION: Indicates the warehouse location for an empty pallet.

OBJECT NAME: EQUIPMENT ID
DATA TYPE: NUMERIC
DATA SIZE: 3
VALUES:
DESCRIPTION: Equipment identifier.

OBJECT NAME: EQUIPMENT ID2
DATA TYPE: NUMERIC
DATA SIZE: 2
VALUES:
DESCRIPTION: Equipment identifier.

OBJECT NAME:	EQUIPMENT STATUS
DATA TYPE:	CHARACTER
DATA SIZE:	1
VALUES:	'Y', 'N'
DESCRIPTION:	Equipment status flags.

OBJECT NAME:	EQUIPMENT TYPE
DATA TYPE:	CHARACTER
DATA SIZE:	1
VALUES:	
DESCRIPTION:	Equipment type.

OBJECT NAME:	ERROR TEXT
DATA TYPE:	CHARACTER
DATA SIZE:	34
VALUES:	
DESCRIPTION:	NLSC text describing the nature of the error being reported.

OBJECT NAME:	ERROR TYPE
DATA TYPE:	NUMERIC
DATA SIZE:	1
VALUES:	1 = Pallet present, no ID 2 = ID present, no pallet
DESCRIPTION:	Type of conveyor tracking error

OBJECT NAME:	ERRORS
DATA TYPE:	CHARACTER
DATA SIZE:	35
VALUES:	
DESCRIPTION:	CAR error text describing the nature of the error being reported.

OBJECT NAME:	FACE
DATA TYPE:	ALPHANUMERIC
DATA SIZE:	2
VALUES:	
DESCRIPTION:	Identifies the crane aisle of a location in the NMC stacker.

OBJECT NAME:	FAULT CODE
DATA TYPE:	NUMERIC
DATA SIZE:	3
VALUES:	
DESCRIPTION:	Conveyor fault code

OBJECT NAME:	FAULT INDICATOR
DATA TYPE:	NUMERIC
DATA SIZE:	1
VALUES:	0 = False; 1 = True
DESCRIPTION:	Indicator specifying if fault occurred

OBJECT NAME:	FAULT NUMBER
DATA TYPE:	NUMERIC
DATA SIZE:	4
VALUES:	000 - 099 - Logic Errors 100 - 199 - Conditional Errors 200 - 299 - Shuttle Motion Errors 300 - 399 - Hoist Motion Errors 400 - 499 - Aisle Motion Errors 500 - 599 Host Communication Errors
DESCRIPTION:	Number of the fault which occurred

OBJECT NAME:	FINAL DESTINATION STATUS
DATA TYPE:	NUMERIC
DATA SIZE:	1
VALUES:	0 (normal dump), 1 (label not in table), 2 (destination chute full), 3 (tripper or cart failure), 4 (invalid chute address), 5 (no cart for label), 6 (semi-automatic), 7 (time-out), 8 (cart broken), 9 (relatch failure)
DESCRIPTION:	The status sent by the sorter after a package was dumped.

OBJECT NAME:	FLAG
DATA TYPE:	CHARACTER
DATA SIZE:	1
VALUES:	'R', 'C', 'E', 'W'
DESCRIPTION:	Contains codes especially pertaining to carousel and stacker systems. R=Request, C=Completion, E=Emergency, and W=Clear.

OBJECT NAME:	FUNC CUR DEST
DATA TYPE:	CHARACTER
DATA SIZE:	3
VALUES:	
DESCRIPTION:	Indicates the destination for totes routed to this function.

OBJECT NAME:	FUNC DFLT DEST
DATA TYPE:	CHARACTER
DATA SIZE:	4
VALUES:	
DESCRIPTION:	The default destination for totes released from this function.

OBJECT NAME: FUNC PLC NO
DATA TYPE: CHARACTER
DATA SIZE: 3
VALUES:
DESCRIPTION: The PLC number for tote move messages for this function.

OBJECT NAME: FUNC TYPE
DATA TYPE: CHARACTER
DATA SIZE: 1
VALUES:
DESCRIPTION: Indicates the function type (towline or conveyor).

OBJECT NAME: FUNC WKAREA
DATA TYPE: CHARACTER
DATA SIZE: 4
VALUES:
DESCRIPTION: The mnemonic identifying the functional work area.

OBJECT NAME: FUNCTION CODE BITS
DATA TYPE: CHARACTER
DATA SIZE: 6
VALUES: 'Y', 'N'
DESCRIPTION: Determines what functions this workstation has performed.

OBJECT NAME: FUNCTION FLAGS
DATA TYPE: CHARACTER
DATA SIZE: 1
VALUES:
DESCRIPTION: Determines what functions this workstation may perform.

OBJECT NAME: GOTO CHARACTER
DATA TYPE: CHARACTER
DATA SIZE: 1
VALUES: 'G'
DESCRIPTION: Goto command character.

OBJECT NAME: HALF CYCLE DONE INDICATOR
DATA TYPE: NUMERIC
DATA SIZE: 1
VALUES: 0 = False; 1 = True
DESCRIPTION: Indicator specifying whether half cycle is finished

OBJECT NAME: HALT CHARACTER
DATA TYPE: CHARACTER
DATA SIZE: 1
VALUES: 'H'
DESCRIPTION: Halt command character.

OBJECT NAME: HANDLING UNIT
DATA TYPE: CHARACTER
DATA SIZE: 1
VALUES:
DESCRIPTION: Code describing the DSS Handling Unit in the SMM.

OBJECT NAME: HARDWARE PLC NUMBER
DATA TYPE: NUMERIC
DATA SIZE: 3
VALUES: 001
DESCRIPTION: PLC number for the conveyor

OBJECT NAME: HEIGHT
DATA TYPE: NUMERIC
DATA SIZE: 3
VALUES:
DESCRIPTION: Height in inches.

OBJECT NAME: HIST CON NO
DATA TYPE: ALPHANUMERIC
DATA SIZE: 7
VALUES:
DESCRIPTION: The control number associated with material being shipped.

OBJECT NAME: HIST CUBE
DATA TYPE: ALPHANUMERIC
DATA SIZE: 4
VALUES:
DESCRIPTION: Cubic dimensions of a package.

OBJECT NAME: HIST DEST1
DATA TYPE: ALPHANUMERIC
DATA SIZE: 3
VALUES:
DESCRIPTION: The first lane destination of a package.

OBJECT NAME: HIST DEST2
DATA TYPE: ALPHANUMERIC
DATA SIZE: 3
VALUES:
DESCRIPTION: The second lane destination of a package.

OBJECT NAME: HIST DEST3
DATA TYPE: ALPHANUMERIC
DATA SIZE: 3
VALUES:
DESCRIPTION: The third lane destination of a package.

OBJECT NAME: HIST HEIGHT
DATA TYPE: ALPHANUMERIC
DATA SIZE: 2
VALUES:
DESCRIPTION: The height of a package.

OBJECT NAME: HIST LENGTH
DATA TYPE: ALPHANUMERIC
DATA SIZE: 2
VALUES:
DESCRIPTION: The length of a package.

OBJECT NAME: HIST RECEIVE TIME
DATA TYPE: DATE
DATA SIZE: 1
VALUES:
DESCRIPTION: The date lane information was received from DSS.

OBJECT NAME: HIST RETIRED DATE
DATA TYPE: DATE
DATA SIZE: 1
VALUES:
DESCRIPTION: The date an AWOS record was moved to the awos history table.

OBJECT NAME: HIST TRANSMIT TIME
DATA TYPE: DATE
DATA SIZE: 1
VALUES:
DESCRIPTION: The date package information was transmitted to DSS.

OBJECT NAME: HIST WEIGHT
DATA TYPE: NUMERIC
DATA SIZE: 6
VALUES:
DESCRIPTION: The weight of a package.

OBJECT NAME: HIST WIDTH
DATA TYPE: ALPHANUMERIC
DATA SIZE: 2
VALUES:
DESCRIPTION: The width of a package.

OBJECT NAME: HOIST TRAVEL TIME
DATA TYPE: NUMERIC
DATA SIZE: 3
VALUES:
DESCRIPTION: Vertical travel time of last operation

OBJECT NAME: HOIST W/SHT ENTEND TIME
DATA TYPE: NUMERIC
DATA SIZE: 3
VALUES:
DESCRIPTION: Time required to lower shuttle with shuttle extended on last operation

OBJECT NAME: HORIZONTAL POSITION
DATA TYPE: ALPHANUMERIC
DATA SIZE: 3
VALUES:
DESCRIPTION: Identifies the horizontal aspect of a location in the NMC stacker.

OBJECT NAME: INFO CODE
DATA TYPE: NUMERIC
DATA SIZE: 2
VALUES:
DESCRIPTION: The information request code. Code signifies which information is being requested. Meaning may depend on system being queried.

OBJECT NAME: INTERNAL MESSAGE BODY
DATA TYPE: ALPHANUMERIC
DATA SIZE: Variable
VALUES:
DESCRIPTION: The message text of any ECS Internal Message.

OBJECT NAME: INVALID COMMANDS
DATA TYPE: NUMERIC
DATA SIZE: 5
VALUES:
DESCRIPTION: Number of invalid message commands.

OBJECT NAME: INVALID DATA
DATA TYPE: CHARACTER
DATA SIZE: 19
VALUES:
DESCRIPTION: Duplicate of invalid data sent.

OBJECT NAME: JOG LEFT CHARACTERS
DATA TYPE: CHARACTER
DATA SIZE: 2
VALUES: 'JL'
DESCRIPTION: Jog Left command characters.

OBJECT NAME: JOG NUMBER
DATA TYPE: NUMERIC
DATA SIZE: 4
VALUES:
DESCRIPTION: Number of positions that the Carousel should move in either direction.

OBJECT NAME: JOG RIGHT CHARACTERS
DATA TYPE: CHARACTER
DATA SIZE: 2
VALUES: 'JR'
DESCRIPTION: Jog Right command characters.

OBJECT NAME: KEYPAD ID
DATA TYPE: ALPHANUMERIC
DATA SIZE: 3
VALUES:
DESCRIPTION: Identifies the keypad.

OBJECT NAME: KILL DONE INDICATOR
DATA TYPE: NUMERIC
DATA SIZE: 1
VALUES: 0 = False; 1 = True
DESCRIPTION: Indicator specifying whether kill command is finished

OBJECT NAME: LANE ID
DATA TYPE: CHARACTER
DATA SIZE: 4
VALUES:
DESCRIPTION: Lane identifier.

OBJECT NAME: LANE ID2
DATA TYPE: CHARACTER
DATA SIZE: 2
VALUES:
DESCRIPTION: Lane identifier.

OBJECT NAME: LANE ID3
DATA TYPE: CHARACTER
DATA SIZE: 3
VALUES:
DESCRIPTION: Lane identifier.

OBJECT NAME: LANE STATUS BITMAP
DATA TYPE: NUMERIC
DATA SIZE: 2
VALUES:
DESCRIPTION: Lane identifier.

OBJECT NAME: LEFT ONE CHARACTER
DATA TYPE: CHARACTER
DATA SIZE: 1
VALUES: 'L'
DESCRIPTION: Left one bin command.

OBJECT NAME: LENGTH
DATA TYPE: CHARACTER
DATA SIZE: 3
VALUES:
DESCRIPTION: Length in inches.

OBJECT NAME: LOAD_CUR_LOC
DATA TYPE: ALPHANUMERIC
DATA SIZE: 8
VALUES:
DESCRIPTION: Current Aisle or Zone

OBJECT NAME: LOAD_DST_LOC
DATA TYPE: ALPHANUMERIC
DATA SIZE: 8
VALUES:
DESCRIPTION: Destination Rack Location or Zone

OBJECT NAME: LOAD_ERR
DATA TYPE: NUMERIC
DATA SIZE: 10
VALUES:
DESCRIPTION: Reject Status from Sizing Message

OBJECT NAME: LOAD_ID
DATA TYPE: ALPHANUMERIC
DATA SIZE: 8
VALUES:
DESCRIPTION: Unique identifier of load/pallet

OBJECT NAME: LOAD_INTR_LOC
DATA TYPE: ALPHANUMERIC
DATA SIZE: 8
VALUES:
DESCRIPTION: Intermediate Zone or Rack Location

OBJECT NAME: LOAD_SRC_LOC
DATA TYPE: ALPHANUMERIC
DATA SIZE: 8
VALUES:
DESCRIPTION: Source Rack Location or Zone

OBJECT NAME: LOAD_TIMESTAMP
DATA TYPE: NUMERIC
DATA SIZE: 12
VALUES:
DESCRIPTION: Time/Date of last Load activity

OBJECT NAME: LOAD_TRAN_ID
DATA TYPE: NUMERIC
DATA SIZE: 4
VALUES:
DESCRIPTION: Current Transaction ID for Stacker Commands Only

OBJECT NAME: LOAD PRESENT INDICATOR
DATA TYPE: NUMERIC
DATA SIZE: 1
VALUES: 0 = False; 1 = True
DESCRIPTION: Indicator specifying if there is a load present on shuttle

OBJECT NAME: LOAD TYPE
DATA TYPE: ALPHA
DATA SIZE: 2
VALUES:
DESCRIPTION: Type of load on pallet

OBJECT NAME: LOCATION
DATA TYPE: ALPHANUMERIC
DATA SIZE: 16
VALUES:
DESCRIPTION: The storage location of the item to be moved.

OBJECT NAME: LOCATION9
DATA TYPE: ALPHANUMERIC
DATA SIZE: 9
VALUES:
DESCRIPTION: The nine position location ID which indicates the origin of the material.

OBJECT NAME: LOCATION4
DATA TYPE: ALPHANUMERIC
DATA SIZE: 4
VALUES:
DESCRIPTION: The spur location for either a tote, pallet or a towline cart.

OBJECT NAME: MANUAL MODE INDICATOR
DATA TYPE: NUMERIC
DATA SIZE: 1
VALUES: 0 = False; 1 = True
DESCRIPTION: Indicator specifying if in manual mode

OBJECT NAME: MESSAGE BODY
DATA TYPE: ALPHANUMERIC
DATA SIZE: Variable
VALUES:
DESCRIPTION: This is a variable length field which may contain one or many subfields depending on the nature of the message. Length is contained in BODY LENGTH.

OBJECT NAME: MESSAGE ERRORS
DATA TYPE: NUMERIC
DATA SIZE: 5
VALUES:
DESCRIPTION: Number of message errors received by the Carousel Interface Box (CIB).

OBJECT NAME: MESSAGE ID
DATA TYPE: CHARACTER
DATA SIZE: 3
VALUES:
DESCRIPTION: The identification code of a message transaction. This identifies the type of message contained in the transaction.

OBJECT NAME: MESSAGE LENGTH
DATA TYPE: NUMERIC
DATA SIZE: 3
VALUES:
DESCRIPTION: The maximum size of a message which includes the Message ID and Internal Message Body.

OBJECT NAME: MESSAGE NUMBER
DATA TYPE: CHARACTER
DATA SIZE: 2
VALUES:
DESCRIPTION: The code which identifies the enumeration by which Internal ECS messages are catalogued. For example, Internal ECS Message Z22 is an Alert message of type 22.

OBJECT NAME: MESSAGE SIZE
DATA TYPE: NUMERIC
DATA SIZE: 3
VALUES:
DESCRIPTION: Size of the message.

OBJECT NAME: MESSAGE TYPE
DATA TYPE: CHARACTER
DATA SIZE: 3
VALUES:
DESCRIPTION: The identification code of a message transaction. This identifies the type of message contained in the transaction.

OBJECT NAME: MESSAGE TYPE
DATA TYPE: ALPHANUMERIC
DATA SIZE: 1
VALUES:
DESCRIPTION: Type Message Indicator.

OBJECT NAME: MESSAGE TYPE2
DATA TYPE: ALPHANUMERIC
DATA SIZE: 2
VALUES: ‘01’, ‘02’, ‘03’, ‘04’, ‘05’, ‘06’, ‘07’, ‘09’, ‘10’, ‘11’, ‘12’, ‘13’, or ‘14’
DESCRIPTION: The identification code of a New Cumberland message transaction.

OBJECT NAME: MESSAGE TYPE CODE
DATA TYPE: CHARACTER
DATA SIZE: 1
VALUES: A, B, J, K, M, N, T, U, V, X , Z
DESCRIPTION: The identification code of an internal ECS message. The values are A=URA, B=UAR, J=URI, K=UIR, M=URM, N=UMR, T= UKR, U=Subcontroller Update, V= URS, X= USR, Z=Alert. The MESSAGE TYPE CODE is followed by a MESSAGE NUMBER.

OBJECT NAME: MIX RATIO
DATA TYPE: NUMERIC
DATA SIZE: 2
VALUES:
DESCRIPTION: The ratio of function to workstation workload.

OBJECT NAME: MODULE AGVS ID
DATA TYPE: ALPHANUMERIC
DATA SIZE: 3
VALUES:
DESCRIPTION: Identifies the AGV moving the module.

OBJECT NAME: MODULE DEST AREA CODE
DATA TYPE: ALPHANUMERIC
DATA SIZE: 1
VALUES:
DESCRIPTION: Identifies P&D Stand Area.

OBJECT NAME: MODULE DEST STND ID
DATA TYPE: ALPHANUMERIC
DATA SIZE: 3
VALUES:
DESCRIPTION: Stand ID to which module is being moved.

OBJECT NAME: MODULE FNL AREA CODE
DATA TYPE: ALPHANUMERIC
DATA SIZE: 1
VALUES:
DESCRIPTION: The module final destination area code for Upper Tier Query.

OBJECT NAME: MODULE FNL STND ID
DATA TYPE: ALPHANUMERIC
DATA SIZE: 3
VALUES:
DESCRIPTION: Identifies the module final destination Stand ID.

OBJECT NAME: MODULE ID
DATA TYPE: ALPHANUMERIC
DATA SIZE: 3
VALUES:
DESCRIPTION: Identifies the module ID.

OBJECT NAME: MODULE NEXT EMPTY
DATA TYPE: ALPHANUMERIC
DATA SIZE: 5
VALUES:
DESCRIPTION: Identifies the next empty module.

OBJECT NAME: MODULE NEXT LOADED
DATA TYPE: ALPHANUMERIC
DATA SIZE: 5
VALUES:
DESCRIPTION: Identifies the next loaded module.

OBJECT NAME: MODULE NEXT PEND
DATA TYPE: ALPHANUMERIC
DATA SIZE: 5
VALUES:
DESCRIPTION: Identifies the next module pending movement.

OBJECT NAME: MODULE PREV EMPTY
DATA TYPE: ALPHANUMERIC
DATA SIZE: 5
VALUES:
DESCRIPTION: Identifies the previous empty module.

OBJECT NAME: MODULE PREV LOADED
DATA TYPE: ALPHANUMERIC
DATA SIZE: 5
VALUES:
DESCRIPTION: Identifies the next loaded module.

OBJECT NAME: MODULE PREV PEND
DATA TYPE: ALPHANUMERIC
DATA SIZE: 5
VALUES:
DESCRIPTION: Identifies the previous module pending movement.

OBJECT NAME: MODULE STATUS
DATA TYPE: ALPHANUMERIC
DATA SIZE: 1
VALUES:
DESCRIPTION: The Empty/Loaded module indicator.

OBJECT NAME: MOVE RESPONSE CODE
DATA TYPE: NUMERIC
DATA SIZE: 2
VALUES:
DESCRIPTION: This code represents the results of a user initiated move request.

OBJECT NAME: MODULE TRAN ID
DATA TYPE: ALPHANUMERIC
DATA SIZE: 4
VALUES:
DESCRIPTION: Unique identifier of transaction that the module is servicing.

OBJECT NAME: MOVE CHUTE ID
DATA TYPE: ALPHANUMERIC
DATA SIZE: 3
VALUES:
DESCRIPTION: Chute ID material is destined for.

OBJECT NAME: MOVE CHUTE IND
DATA TYPE: ALPHANUMERIC
DATA SIZE: 1
VALUES: 'H' - Heavy, 'L' - Light
DESCRIPTION: Heavy light indicator.

OBJECT NAME: MOVE CHUTE PACK AREA
DATA TYPE: CHARACTER
DATA SIZE: 1
VALUES:
DESCRIPTION: Indicates the pack area destination.

OBJECT NAME: MOVE CON FLD
DATA TYPE: CHARACTER
DATA SIZE: 15
VALUES:
DESCRIPTION: Indicates the move consolidation field.

OBJECT NAME: MOVE CON NO
DATA TYPE: ALPHANUMERIC
DATA SIZE: 7
VALUES:
DESCRIPTION: The control number associated with material being moved.

OBJECT NAME: MOVE CONTROL NUMBER
DATA TYPE: ALPHANUMERIC
DATA SIZE: 7
VALUES:
DESCRIPTION: Control number being moved.

OBJECT NAME: MOVE CONVEY ID
DATA TYPE: ALPHANUMERIC
DATA SIZE: 7
VALUES:
DESCRIPTION: Conveyance ID material is being moved in.

OBJECT NAME: MOVE DATE
DATA TYPE: DATE
DATA SIZE: 1
VALUES:
DESCRIPTION: The date the movement took place.

OBJECT NAME: MOVE DEST
DATA TYPE: ALPHANUMERIC
DATA SIZE: 9
VALUES:
DESCRIPTION: Final destination of move.

OBJECT NAME: MOVE DESTINATION
DATA TYPE: ALPHANUMERIC
DATA SIZE: 9
VALUES:
DESCRIPTION: Final destination of move.

OBJECT NAME: MOVE FLAG
DATA TYPE: ALPHANUMERIC
DATA SIZE: 1
VALUES:
DESCRIPTION: SMM move type flag.

OBJECT NAME: MOVE LOCATION
DATA TYPE: ALPHANUMERIC
DATA SIZE: 16
VALUES:
DESCRIPTION: SMM Location field.

OBJECT NAME: MOVE OPTION
DATA TYPE: ALPHANUMERIC
DATA SIZE: 2
VALUES:
DESCRIPTION: SMM option field.

OBJECT NAME: MOVE PRIORITY
DATA TYPE: ALPHANUMERIC
DATA SIZE: 1
VALUES:
DESCRIPTION: SMM DSS Priority field.

OBJECT NAME: MOVE PROGRAM ID
DATA TYPE: ALPHANUMERIC
DATA SIZE: 4
VALUES:
DESCRIPTION: SMM DSS Program ID.

OBJECT NAME: MOVE PKG STATUS
DATA TYPE: CHARACTER
DATA SIZE: 1
VALUES:
DESCRIPTION: The status of sorter movement messages.

OBJECT NAME: MOVE RECIRC COUNT
DATA TYPE: NUMERIC
DATA SIZE: 2
VALUES:
DESCRIPTION: Move recirculation count.

OBJECT NAME: MOVE SOURCE
DATA TYPE: ALPHANUMERIC
DATA SIZE: 9
VALUES:
DESCRIPTION: Source of move.

OBJECT NAME: MOVE SPAL ID
DATA TYPE: NUMERIC
DATA SIZE: 7
VALUES:
DESCRIPTION: Slave Pallet ID associated with this move control number.

OBJECT NAME: MOVE SRC
DATA TYPE: ALPHANUMERIC
DATA SIZE: 9
VALUES:
DESCRIPTION: Source of move.

OBJECT NAME: MOVE STA
DATA TYPE: ALPHANUMERIC
DATA SIZE: 1
VALUES:
DESCRIPTION: Move status

OBJECT NAME: MOVE TIMESTAMP
DATA TYPE: DATE
DATA SIZE: 12
VALUES:
DESCRIPTION: The date/time the movement was last updated

OBJECT NAME: MOVE WORK TYPE
DATA TYPE: ALPHANUMERIC
DATA SIZE: 1
VALUES:
DESCRIPTION: SMM work type flag

OBJECT NAME: NAK
DATA TYPE: BYTE
DATA SIZE: 1
VALUES:
DESCRIPTION: A negative acknowledgment flag.

OBJECT NAME: NAVY DIAGNOSTIC CODE
DATA TYPE: NUMERIC
DATA SIZE: 2
VALUES: '01' - '43'
DESCRIPTION: Navy stacker diagnostic codes.

OBJECT NAME: NAVY FACE NUMBER
DATA TYPE: ALPHANUMERIC
DATA SIZE: 2
VALUES:
DESCRIPTION: Navy face/aisle number.

OBJECT NAME: NAVY HORIZONTAL NUMBER
DATA TYPE: ALPHANUMERIC
DATA SIZE: 3
VALUES:
DESCRIPTION: Navy horizontal location.

OBJECT NAME: NAVY MESSAGE TYPE
DATA TYPE: ALPHANUMERIC
DATA SIZE: 1
VALUES: '0' - Retrieve left, '1' - Retrieve right, '2' - Restore from left, '3' Restore from right, 'A' - Tray arrival left, 'B' Tray arrival right
DESCRIPTION: Source device of invalid data.

OBJECT NAME: NAVY STATUS CODE
DATA TYPE: ALPHANUMERIC
DATA SIZE: 2
VALUES:
DESCRIPTION: Bit Map of stacker status.

OBJECT NAME: NAVY VERTICAL NUMBER
DATA TYPE: ALPHANUMERIC
DATA SIZE: 2
VALUES:
DESCRIPTION: Navy vertical location.

OBJECT NAME: NEW DESTINATION
DATA TYPE: ALPHANUMERIC
DATA SIZE: 3
VALUES:
DESCRIPTION: The new destination for the item. Represents a functional area or workstation of the warehouse.

OBJECT NAME: NEW MODE
DATA TYPE: ALPHANUMERIC
DATA SIZE: 1
VALUES:
DESCRIPTION: Indicates the new empty cart management mode.

OBJECT NAME: NEW PROCUREMENT STATION
DATA TYPE: BYTE
DATA SIZE: 1
VALUES:
DESCRIPTION: A bitmap configuration for a workstation that performs new procurement inspection.

OBJECT NAME: NLSC SOURCE
DATA TYPE: NUMERIC
DATA SIZE: 2
VALUES:
DESCRIPTION: Source device of invalid data.

OBJECT NAME: NMC TRAY ID
DATA TYPE: ALPHANUMERIC
DATA SIZE: 7
VALUES:
DESCRIPTION: The tray id for the NMC.

OBJECT NAME: NMC WEIGHT
DATA TYPE: CHARACTER
DATA SIZE: 1
VALUES: 'S' (Short), 'N' (Normal), 'L' (Long)
DESCRIPTION: The ration of function to workstation workload.

OBJECT NAME: NUMBER OF PULSES PER BIN
DATA TYPE: NUMERIC
DATA SIZE: 3
VALUES:
DESCRIPTION: Number of pulses per bin.

OBJECT NAME: ON/OFF FLAG
DATA TYPE: ALPHANUMERIC
DATA SIZE: 1
VALUES:
DESCRIPTION: Code used in Set Logging Message to enable/disable logging.

OBJECT NAME: OPTION
DATA TYPE: CHARACTER
DATA SIZE: 2
VALUES:
DESCRIPTION: Reserved for future use.

OBJECT NAME: ORIGINAL ACTION CODE
DATA TYPE: NUMERIC
DATA SIZE: 2
VALUES:
DESCRIPTION: This code represents the action being requested by the user. Its meaning will depend on the destination system.

OBJECT NAME: ORIGINAL INFO CODE
DATA TYPE: ALPHANUMERIC
DATA SIZE: 2
VALUES:
DESCRIPTION: The information request code. Code signifies which information is being requested. Meaning may depend on system being queried.

OBJECT NAME: OUTPUT LANE
DATA TYPE: ALPHANUMERIC
DATA SIZE: 1
VALUES:
DESCRIPTION: The output lane at Intradepot Receiving.

OBJECT NAME: PACKAGE HEIGHT
DATA TYPE: NUMERIC
DATA SIZE: 2
VALUES:
DESCRIPTION: Package height in inches.

OBJECT NAME: PACKAGE LENGTH
DATA TYPE: NUMERIC
DATA SIZE: 2
VALUES:
DESCRIPTION: Package length in inches.

OBJECT NAME: PACKAGE WIDTH
DATA TYPE: NUMERIC
DATA SIZE: 2
VALUES:
DESCRIPTION: Package width in inches.

OBJECT NAME: PENDING EMPTY INDICATOR
DATA TYPE: NUMERIC
DATA SIZE: 1
VALUES: 0 = False; 1 = True
DESCRIPTION: Indicator specifying if S/RM is pending empty

OBJECT NAME: PENDING IDLE TIME
DATA TYPE: NUMERIC
DATA SIZE: 3
VALUES:
DESCRIPTION: Idle time awaiting next command

OBJECT NAME: P/R INDICATOR
DATA TYPE: ALPHANUMERIC
DATA SIZE: 1
VALUES: P or R
DESCRIPTION: Pick or Receive Indicator.

OBJECT NAME: PLC ADDRESS
DATA TYPE: ALPHANUMERIC
DATA SIZE: 6
VALUES:
DESCRIPTION: The identification number for a PLC.

OBJECT NAME: PLC NUMBER
DATA TYPE: NUMERIC
DATA SIZE: 2
VALUES:
DESCRIPTION: The number of the PLC being communicated with.

OBJECT NAME: PLC ZONE NUMBER
DATA TYPE: NUMERIC
DATA SIZE: 2
VALUES:
DESCRIPTION: The identification number for a PLC.

OBJECT NAME: PLCN PLC NUMBER
DATA TYPE: CHARACTER
DATA SIZE: 7
VALUES:
DESCRIPTION: Identifies the PLC.

OBJECT NAME: PLCN SPUR STAT
DATA TYPE: NUMERIC
DATA SIZE:
VALUES:
DESCRIPTION: The status of the spur (either online or offline).

OBJECT NAME: PLCN SPUR TYPE
DATA TYPE: NUMERIC
DATA SIZE: signed longword
VALUES:
DESCRIPTION: Identifies the inspection type (random, retrograde, etc.).

OBJECT NAME: PLCS NUMBER
DATA TYPE: CHARACTER
DATA SIZE: 2
VALUES:
DESCRIPTION: Identifies the specific PLC.

OBJECT NAME: PLCS STATUS
DATA TYPE: CHARACTER
DATA SIZE: 1
VALUES:
DESCRIPTION: Identifies the status of the PLC.

OBJECT NAME: PLCS SUBSYSTEM
DATA TYPE: CHARACTER
DATA SIZE: 1
VALUES: 'B' = Sorter, 'W' = Pallet, 'F' = Tote, 'L' = Towline
DESCRIPTION: Identifies the subsystem which the PLC controls.

OBJECT NAME: POLLED CHARACTER
DATA TYPE: CHARACTER
DATA SIZE: 1
VALUES: 'P'
DESCRIPTION: Sets carousel to polled mode.

OBJECT NAME: POLLED 1 CHARACTER
DATA TYPE: CHARACTER
DATA SIZE: 2
VALUES: 'P1'
DESCRIPTION: Sets carousel to polled mode and polls terminal 1.

OBJECT NAME: POLLED 2 CHARACTER
DATA TYPE: CHARACTER
DATA SIZE: 2
VALUES: 'P2'
DESCRIPTION: Sets carousel to polled mode and polls terminal 2.

OBJECT NAME: POLLED 3 CHARACTER
DATA TYPE: CHARACTER
DATA SIZE: 2
VALUES: 'P3'
DESCRIPTION: Sets carousel to polled mode and polls the CIB.

OBJECT NAME: POLLED 4 CHARACTER
DATA TYPE: CHARACTER
DATA SIZE: 2
VALUES: 'P4'
DESCRIPTION: Sets carousel to polled mode requests retransmission of last message.

OBJECT NAME: POLLED 5 CHARACTER
DATA TYPE: CHARACTER
DATA SIZE: 2
VALUES: 'P5'
DESCRIPTION: Sets carousel to polled mode and requests error register report.

OBJECT NAME: POSITIONING ERROR
DATA TYPE: NUMERIC
DATA SIZE: 5
VALUES:
DESCRIPTION: Number of positioning errors.

OBJECT NAME: POSTAMBLE
DATA TYPE: CHARACTER
DATA SIZE: 1
VALUES: Carriage Return
DESCRIPTION: End of message indicator

OBJECT NAME: POWER CYCLES
DATA TYPE: NUMERIC
DATA SIZE: 5
VALUES:
DESCRIPTION: Number of times the Carousel Interface Box (CIB) has been turned on.

OBJECT NAME: PREAMBLE
DATA TYPE: CHARACTER
DATA SIZE: 1
VALUES: Linefeed
DESCRIPTION: Start of message indicator

OBJECT NAME: PRIMARY PC
DATA TYPE: CHARACTER
DATA SIZE: 1
VALUES: 'A', 'B'
DESCRIPTION: Indicates which PC is primary.

OBJECT NAME: PRIMARY SECONDARY FLAG
DATA TYPE: CHARACTER
DATA SIZE: 1
VALUES: 'P' (Primary), 'S' (Secondary)
DESCRIPTION: Sets device as primary or secondary.

OBJECT NAME: PRIORITY
DATA TYPE: CHARACTER
DATA SIZE: 1
VALUES: '1' - '9'
DESCRIPTION: Priority of the request.

OBJECT NAME: PROGRAM
DATA TYPE: ALPHANUMERIC
DATA SIZE: 8
VALUES:
DESCRIPTION: Program identifier.

OBJECT NAME: QUES ID
DATA TYPE: ALPHANUMERIC
DATA SIZE: 4
VALUES:
DESCRIPTION: Queue Identifier

OBJECT NAME: QUES MOVE CON NO
DATA TYPE: ALPHANUMERIC
DATA SIZE: 7
VALUES:
DESCRIPTION: Move Control Number Queued

OBJECT NAME: QUES EMERGENCY
DATA TYPE: ALPHANUMERIC
DATA SIZE: 1
VALUES: ‘E’, ‘ ‘
DESCRIPTION: Move Control Number Emergency Indicator

OBJECT NAME: QUES TIMESTAMP
DATA TYPE: ALPHANUMERIC
DATA SIZE: 12
VALUES:
DESCRIPTION: Time record was last updated.

OBJECT NAME: RANDOM STATION
DATA TYPE: BYTE
DATA SIZE: 1
VALUES:
DESCRIPTION: A bitmap configuration for a workstation that performs random inspection.

OBJECT NAME: READ TOTAL
DATA TYPE: ALPHANUMERIC
DATA SIZE: 6
VALUES:
DESCRIPTION: The total of good or bad reads of an AWOS device.

OBJECT NAME: RECIRCULATION COUNT
DATA TYPE: ALPHANUMERIC
DATA SIZE: 1
VALUES:
DESCRIPTION: The recirculation count for a particular towline cart.

OBJECT NAME: REJECT REASON CODE
DATA TYPE: CHARACTER
DATA SIZE: 2
VALUES:
DESCRIPTION: Fault code.

OBJECT NAME: REJECT STATUS
DATA TYPE: NUMERIC
DATA SIZE: 10
VALUES: 0 = False = Pass
1 = True = Fail
Byte 0 Not Used
Byte 1 Over Weight
Byte 2 Over Height
Byte 3 Oversize Left
Byte 4 Oversize Right
Byte 5 Oversize Front
Byte 6 Oversize Rear
Byte 7 Failed Bar Code Reader
Byte 8 Load Size A
Byte 9 Load Size B
DESCRIPTION: Reason for sizing station reject of load

OBJECT NAME: RELEASE LOCATION
DATA TYPE: ALPHANUMERIC
DATA SIZE: 4
VALUES:
DESCRIPTION: The current location for the item. Represents a functional area or workstation of the warehouse.

OBJECT NAME: REQUESTED BIN NUMBER
DATA TYPE: NUMERIC
DATA SIZE: 3
VALUES:
DESCRIPTION: Bin number of goto move.

OBJECT NAME: RESERVED (CSF)
DATA TYPE: NUMERIC
DATA SIZE: 3
VALUES: 000
DESCRIPTION: Reserved space - Not Used

OBJECT NAME: RESET CODE
DATA TYPE: ALPHANUMERIC
DATA SIZE: 4
VALUES:
DESCRIPTION: The code for resetting the PLC.

OBJECT NAME: RESET TIME
DATA TYPE: DATE
DATA SIZE: 14
VALUES:
DESCRIPTION: The date device statistics were last reset.

OBJECT NAME: RESTART CHARACTER
DATA TYPE: CHARACTER
DATA SIZE: 1
VALUES: 'R'
DESCRIPTION: Restarts CIB.

OBJECT NAME: RETROGRADE STATION
DATA TYPE: BYTE
DATA SIZE: 1
VALUES:
DESCRIPTION: A bitmap configuration for a workstation that performs depot retrograde inspection.

OBJECT NAME: RIGHT ONE CHARACTER
DATA TYPE: CHARACTER
DATA SIZE: 1
VALUES: 'R'
DESCRIPTION: Moves the bin 1 to the right.

OBJECT NAME: ROUTE
DATA TYPE: ALPHANUMERIC
DATA SIZE: 3
VALUES:
DESCRIPTION: Tote in Traffic Route.

OBJECT NAME: S/RM BUSY INDICATOR
DATA TYPE: NUMERIC
DATA SIZE: 1
VALUES: 0 = False; 1 = True
DESCRIPTION: Indicator specifying whether S/RM is busy

OBJECT NAME: SECOND ALTERNATE DESTINATION
DATA TYPE: ALPHANUMERIC
DATA SIZE: 9
VALUES:
DESCRIPTION: The second alternate destination for the movement request. Represents a functional area or workstation of the warehouse.

OBJECT NAME: SECONDARY DESTINATION
DATA TYPE: ALPHANUMERIC
DATA SIZE: 4
VALUES:
DESCRIPTION: The alternate destination for the movement request. Represents a functional area or workstation of the warehouse.

OBJECT NAME: SECT_CTRL_CABINET
DATA TYPE: NUMERIC
DATA SIZE: 1
VALUES: 1-7
DESCRIPTION: PLC Control Cabinet an Area is Found in

OBJECT NAME: SECT_ENABLED_STAT
DATA TYPE: ALPHA
DATA SIZE: 1
VALUES: (E)nable; (D)isable
DESCRIPTION: Conveyor Control Section Status

OBJECT NAME: SECT_FAULTED_STAT
DATA TYPE: ALPHA
DATA SIZE: 1
VALUES: (F)aulted; Blank for Non-Faulted
DESCRIPTION: Indication of faulted condition of Area

OBJECT NAME: SECT_ID
DATA TYPE: NUMERIC
DATA SIZE: 3
VALUES: 001 - 028
DESCRIPTION: Conveyor Control Sections

OBJECT NAME: SEGMENT
DATA TYPE: ALPHANUMERIC
DATA SIZE: 2
VALUES:
DESCRIPTION: Carousel Segment.

OBJECT NAME: SEND ERRORS CHARACTERS
DATA TYPE: CHARACTER
DATA SIZE: 2
VALUES: 'SE'
DESCRIPTION: Requests carousel to transmit error data.

OBJECT NAME: SEND STATUS CHARACTERS
DATA TYPE: CHARACTER
DATA SIZE: 2
VALUES: 'SS'
DESCRIPTION: Requests carousel to transmit status data.

OBJECT NAME: SEQUENCE NUMBER
DATA TYPE: NUMERIC
DATA SIZE: 8
VALUES:
DESCRIPTION: The DSS-assigned sequence number of the transaction. The sequence of this number is reset daily.

OBJECT NAME: SEQUENCE STEP
DATA TYPE: NUMERIC
DATA SIZE: 2
VALUES:
DESCRIPTION: Current stacker operation sequence number

OBJECT NAME: SHIPMENT UNIT
DATA TYPE: ALPHANUMERIC
DATA SIZE: 15
VALUES:
DESCRIPTION: The shipment unit number of the item for which a move is being requested. Used for shipment consolidation.

OBJECT NAME: SHUTTLE CENTER TIME
DATA TYPE: NUMERIC
DATA SIZE: 3
VALUES:
DESCRIPTION: Time to retract shuttle on last operation

OBJECT NAME: SHUTTLE CENTERED INDICATOR
DATA TYPE: NUMERIC
DATA SIZE: 1
VALUES: 0 = False; 1 = True
DESCRIPTION: Indicator specifying if shuttle is centered

OBJECT NAME: SHUTTLE EXTEND TIME
DATA TYPE: NUMERIC
DATA SIZE: 3
VALUES:
DESCRIPTION: Time required to extend shuttle on last operation

OBJECT NAME: SORTER MODE
DATA TYPE: NUMERIC
DATA SIZE: 1
VALUES: 0 (automatic), 1 (semi-automatic), 2 (manual), 3 (maintenance)
4 (startup completed), 5 (shutdown completed)
DESCRIPTION: The mode that the sorter is in.

OBJECT NAME: SORTER STATUS REQUEST
DATA TYPE: NUMERIC
DATA SIZE: 1
VALUES: 4 (startup enable), 5 (shutdown request)
DESCRIPTION: The ECS generated message to startup or shutdown the sorter.

OBJECT NAME: SOURCE
DATA TYPE: ALPHANUMERIC
DATA SIZE: 9
VALUES:
DESCRIPTION: The source functional area or workstation of the movement being requested.

OBJECT NAME: SOURCE3
DATA TYPE: ALPHANUMERIC
DATA SIZE: 3
VALUES:
DESCRIPTION: The source functional area or workstation of the movement being requested.

OBJECT NAME: SOURCE4
DATA TYPE: ALPHANUMERIC
DATA SIZE: 4
VALUES:
DESCRIPTION: The source functional area or workstation of the movement being requested.

OBJECT NAME: SOURCE8
DATA TYPE: ALPHANUMERIC
DATA SIZE: 8
VALUES:
DESCRIPTION: The source functional area or workstation of the movement being requested.

OBJECT NAME: SOURCE BAY
DATA TYPE: NUMERIC
DATA SIZE: 3
VALUES: 001 - 074 or 000 not used
DESCRIPTION: Number of bay in aisle

OBJECT NAME: SOURCE LEVEL
DATA TYPE: NUMERIC
DATA SIZE: 2
VALUES: 00 - 08 or 00 if not used
DESCRIPTION: Number of tier in aisle

OBJECT NAME: SOURCE P&D
DATA TYPE: NUMERIC
DATA SIZE: 2
VALUES: 01 or 00 if not used
DESCRIPTION: Stacker input P&D stand number

OBJECT NAME: SOURCE SIDE
DATA TYPE: ALPHA
DATA SIZE: 1
VALUES: A, B, C, D or blank if not used
DESCRIPTION: Combination of left or right side and near or deep position

OBJECT NAME: SPAL ID
DATA TYPE: NUMERIC
DATA SIZE: 7
VALUES:
DESCRIPTION: At DDNV, SPAL ID is the same as TRIAX Location and is the slave pallet ID. At DDDC, SPAL ID and location differ for STACKMAN.

OBJECT NAME: SPAL CON NO
DATA TYPE: ALPHANUMERIC
DATA SIZE: 7
VALUES:
DESCRIPTION: Control number for pallet

OBJECT NAME: SPAL SRC LOC
DATA TYPE: ALPHANUMERIC
DATA SIZE: 9
VALUES:
DESCRIPTION: Source location for pallet

OBJECT NAME: SPAL INTR LOC
DATA TYPE: ALPHANUMERIC
DATA SIZE: 9
VALUES:
DESCRIPTION: Intermediate destination location for pallet

OBJECT NAME: SPAL DST LOC
DATA TYPE: ALPHANUMERIC
DATA SIZE: 9
VALUES:
DESCRIPTION: Destination location for pallet

OBJECT NAME: SPAL CUR LOC
DATA TYPE: ALPHANUMERIC
DATA SIZE: 9
VALUES:
DESCRIPTION: Current location for pallet

OBJECT NAME: SPAL LAST SCANNER
DATA TYPE: ALPHANUMERIC
DATA SIZE: 3
VALUES:
DESCRIPTION: ID number of last scanner reached by pallet

OBJECT NAME: SPAL ERR
DATA TYPE: ALPHANUMERIC
DATA SIZE: 2
VALUES:
DESCRIPTION: Error code associated with pallet

OBJECT NAME: SPAL TIMESTAMP
DATA TYPE: NUMERIC
DATA SIZE: 1
VALUES:
DESCRIPTION: Timestamp of last pallet activity

OBJECT NAME: SPAL RECIRC CNT
DATA TYPE: NUMERIC
DATA SIZE: 1
VALUES:
DESCRIPTION: Recirculation count for pallet

OBJECT NAME: SPAL COMMAND LAST
DATA TYPE: ALPHANUMERIC
DATA SIZE: 2
VALUES:
DESCRIPTION: Last command given for pallet

OBJECT NAME: SPAL COMMAND CURR
DATA TYPE: ALPHANUMERIC
DATA SIZE: 2
VALUES:
DESCRIPTION: Current command given for pallet

OBJECT NAME: SPAL COMMAND NEXT
DATA TYPE: ALPHANUMERIC
DATA SIZE: 2
VALUES:
DESCRIPTION: Next command to be given for pallet

OBJECT NAME: SPAL IN OUT TYPE
DATA TYPE: ALPHANUMERIC
DATA SIZE: 1
VALUES:
DESCRIPTION: Type of work for pallet recirculation

OBJECT NAME: SPAL STATUS
DATA TYPE: ALPHANUMERIC
DATA SIZE: 1
VALUES:
DESCRIPTION: Status of pallet

OBJECT NAME: SPARE
DATA TYPE: ALPHANUMERIC
DATA SIZE: 1
VALUES:
DESCRIPTION: Unused field reserved for future use.

OBJECT NAME: SPUR NUMBER
DATA TYPE: ALPHANUMERIC
DATA SIZE: 4
VALUES:
DESCRIPTION: The towline workstation that is to be unlocked.

OBJECT NAME: SRC
DATA TYPE: ALPHANUMERIC
DATA SIZE: 3
VALUES:
DESCRIPTION: Tote Source.

OBJECT NAME: STAND AREA
DATA TYPE: ALPHANUMERIC
DATA SIZE: 1
VALUES: 'A' - Exception Reduction, 'B' - PPP&M Research, 'C' - Consolidation, 'H' - High Rise Storage (200 - 229, 300 - 329, 400 - 429, 500 - 529), 'L' - Less Than Truckload (013 - 018), 'M' - PPP&M (019 - 027), 'N' - Consolidation STG, 'P' - Pallet Storage (700 - 787), 'R' - Module Load (001 - 012), 'S' - Staging (Mod Load 100 - 152, PPP&M 153 - 175), 'T' - Shipping (660 - 673), 'W' Maintenance (650 - 651), 'X' - Packing Exception
DESCRIPTION: Pick and delivery area code.

OBJECT NAME: STAND ENABLED FLAG
DATA TYPE: ALPHANUMERIC
DATA SIZE: 1
VALUES: ‘E’-enabled, ‘D’-disabled, ‘X’ - down
DESCRIPTION: Enabled status of a stand.

OBJECT NAME: STAND ID
DATA TYPE: ALPHANUMERIC
DATA SIZE: 3
VALUES:
DESCRIPTION: Unique identifier for each floor stand.

OBJECT NAME: STAND MODULE ID
DATA TYPE: ALPHANUMERIC
DATA SIZE: 5
VALUES:
DESCRIPTION: Unique identifier of module currently located at stand.

OBJECT NAME: STAND NEXT EMPTY
DATA TYPE: ALPHANUMERIC
DATA SIZE: 3
VALUES:
DESCRIPTION: Next empty stand in area.

OBJECT NAME: STAND NO. DESTINATION
DATA TYPE: ALPHANUMERIC
DATA SIZE: 3
VALUES:
DESCRIPTION: Tote Destination.

OBJECT NAME: STAND PREV EMPTY
DATA TYPE: ALPHANUMERIC
DATA SIZE: 3
VALUES:
DESCRIPTION: Previous empty stand in area.

OBJECT NAME: STAND STATUS
DATA TYPE: ALPHANUMERIC
DATA SIZE: 1
VALUES: 'E' - Empty, 'O' - Occupied, 'X' - Down
DESCRIPTION: Stand status.

OBJECT NAME: STAND TRAN ID
DATA TYPE: ALPHANUMERIC
DATA SIZE: 4
VALUES:
DESCRIPTION: Unique identifier of transaction being operated on by stand.

OBJECT NAME: START/STOP CODE
DATA TYPE: CHARACTER
DATA SIZE: 1
VALUES: ‘0’-Stop, ‘1’ - Start
DESCRIPTION: Indicates start of text in a message.

OBJECT NAME: START TEXT CHARACTER
DATA TYPE: CHARACTER
DATA SIZE: 1
VALUES: <STX>
DESCRIPTION: Indicates start of text in a message.

OBJECT NAME: STATION ID
DATA TYPE: NUMERIC (BITMAP)
DATA SIZE: 1
VALUES:
DESCRIPTION: This is a bitmap that represents the different lanes.

OBJECT NAME: STATISTICS
DATA TYPE: ALPHANUMERIC
DATA SIZE: 127
VALUES:
DESCRIPTION: Indicates elapsed time and state times of each crane as well as number of trays pulled.

OBJECT NAME: STATUS
DATA TYPE: NUMERIC
DATA SIZE: 1
VALUES: 1 (automatic), 2 (semi-automatic), 3 (manual mode)
DESCRIPTION: Indicates the mode that the conveyor or towline is running in.

OBJECT NAME: STATUS BIT MAP
DATA TYPE: 16 BIT WORD
DATA SIZE: 15
VALUES:
DESCRIPTION: Indicates the status of either a loop, spur, or a transfer.

OBJECT NAME: STATUS BYTE
DATA TYPE: BINARY
DATA SIZE: 1
VALUES:
DESCRIPTION: Carousel status.

OBJECT NAME: STATUS COMMAND
DATA TYPE: NUMERIC
DATA SIZE: 1
VALUES: 0 (status update), 1 (startup), 2 (shutdown)
DESCRIPTION: The status for the conveyor or towline. The 0 value is only applicable to the towline.

OBJECT NAME: STATUS CODE
DATA TYPE: CHARACTER
DATA SIZE: 2
VALUES:
DESCRIPTION: NLSC status.

OBJECT NAME: STATUS CODE3
DATA TYPE: CHARACTER
DATA SIZE: 3
VALUES:
DESCRIPTION: status.

OBJECT NAME: STATUS MESSAGE FLAG
DATA TYPE: CHARACTER
DATA SIZE: 1
VALUES: 'Y', 'N'
DESCRIPTION: Indicates if a status message is on the operator console.

OBJECT NAME: STATUS OF UPDATE
DATA TYPE: ALPHANUMERIC
DATA SIZE: 1
VALUES:
DESCRIPTION: The status for the sorter chute.

OBJECT NAME: STATUS TEXT
DATA TYPE: ALPHANUMERIC
DATA SIZE: 21
VALUES:
DESCRIPTION: The text of the generic internal status message.

OBJECT NAME: STATUS TEXT18
DATA TYPE: ALPHANUMERIC
DATA SIZE: 18
VALUES:
DESCRIPTION: The text of the CAR internal status message.

OBJECT NAME: STKR_ACTV
DATA TYPE: ALPHA
DATA SIZE: 1
VALUES: (I)dle or (A)ctive
DESCRIPTION: Current Activity Indicator

OBJECT NAME: STKR_CURR_CMND
DATA TYPE: ALPHA
DATA SIZE: 2
VALUES:
DESCRIPTION: Current command in active register

OBJECT NAME: STKR_CURR_TRAN_ID
DATA TYPE: NUMERIC
DATA SIZE: 4
VALUES:
DESCRIPTION: Tran ID of comm in active register

OBJECT NAME: STKR_FAULT
DATA TYPE: NUMERIC
DATA SIZE: 3
VALUES: 000 - 599
DESCRIPTION: Stacker Fault Code Number

OBJECT NAME: STKR_FUNC
DATA TYPE: ALPHA
DATA SIZE: 3
VALUES: MOV, DEP, PIC, BTH, EXE, XLD
DESCRIPTION: Stacker function in process

OBJECT NAME: STKR_ID
DATA TYPE: ALPHANUMERIC
DATA SIZE: 4
VALUES:
DESCRIPTION: Unit Load Aisle Number

OBJECT NAME: STKR_LOAD_ID
DATA TYPE: ALPHANUMERIC
DATA SIZE: 8
VALUES:
DESCRIPTION: Load ID in Process

OBJECT NAME: STKR_MODE
DATA TYPE: ALPHA
DATA SIZE: 4
VALUES: BOTH, STOR. RETR, EXER, MANT
DESCRIPTION: Stacker mode (set by operator)

OBJECT NAME: STKR_NEXT_CMND
DATA TYPE: ALPHA
DATA SIZE: 2
VALUES:
DESCRIPTION: Next command in pending register

OBJECT NAME: STKR_NEXT_TRAN_ID
DATA TYPE: NUMERIC
DATA SIZE: 4
VALUES:
DESCRIPTION: Tran ID of comm in pending register

OBJECT NAME: STKR_STAT
DATA TYPE: NUMERIC
DATA SIZE: 1
VALUES: 0 = out of service; 1 = in service
DESCRIPTION: Physical status of stacker aisle

OBJECT NAME: STRETCH WRAP INDICATOR
DATA TYPE: ALPHA
DATA SIZE: 1
VALUES:
DESCRIPTION: Indicates if pallet requires shrink-wrapping

OBJECT NAME: SUCCESS FLAG
DATA TYPE: ALPHA
DATA SIZE: 1
VALUES: (S)uccess, (F)ailure
DESCRIPTION: Success/Failure Indicator

OBJECT NAME: SYS EMPTY CART MAN MODE
DATA TYPE: ALPHANUMERIC
DATA SIZE: 3
VALUES:
DESCRIPTION: Indicates the mode that empty cart management is currently working in.

OBJECT NAME: SYS LOOP COUNT
DATA TYPE: NUMERIC
DATA SIZE: 4
VALUES:
DESCRIPTION: The number of carts or totes on a towline or conveyor loop.

OBJECT NAME: SYS MISDIVERT
DATA TYPE: NUMERIC
DATA SIZE: 1
VALUES: 0 - 3
DESCRIPTION: The count used to determine when to send a cart to a redirect spur.

OBJECT NAME: SYS MODE OF OPERATION
DATA TYPE: ALPHANUMERIC
DATA SIZE: 1
VALUES:
DESCRIPTION: Data indicating the status of all subsystems and controllers. The status can be online, offline, manual, automatic, or semi-automatic.

OBJECT NAME: SYS OVERRIDE PRIO CART
DATA TYPE: ALPHANUMERIC
DATA SIZE: 4
VALUES:
DESCRIPTION: Indicates a cart with an override priority in the M/H queues.

OBJECT NAME: SYS PLC MODE
DATA TYPE: ALPHANUMERIC
DATA SIZE: 4
VALUES:
DESCRIPTION: Indicates the operational status of the PLCs.

OBJECT NAME: SYS PRIORITY
DATA TYPE: ALPHANUMERIC
DATA SIZE: 1
VALUES:
DESCRIPTION: The priority of the M/H Queues and material within the queues.

OBJECT NAME: SYS SORT COUNTS
DATA TYPE: NUMERIC
DATA SIZE: 5
VALUES:
DESCRIPTION: The number of packages delivered to the Mission and CCP sorters since startup.

OBJECT NAME: SYS SPUR STATUS
DATA TYPE: ALPHANUMERIC
DATA SIZE: 1
VALUES:
DESCRIPTION: Indicates if a towline/conveyor spur is online or offline.

OBJECT NAME: SYS STATE
DATA TYPE: ALPHANUMERIC
DATA SIZE: 1
VALUES:
DESCRIPTION: Indicates the operating state of the towline, conveyor, and sorters.

OBJECT NAME: SYS TOTE/LANE XREF
DATA TYPE: ALPHANUMERIC
DATA SIZE: 9
VALUES:
DESCRIPTION: Indicates which lane a particular tote was sent down.

OBJECT NAME: SYSTEM FIRST EMPTY
DATA TYPE: ALPHANUMERIC
DATA SIZE: 5
VALUES:
DESCRIPTION: First empty module in the system.

OBJECT NAME: SYSTEM LAST EMPTY
DATA TYPE: ALPHANUMERIC
DATA SIZE: 5
VALUES:
DESCRIPTION: Last empty module in the system.

OBJECT NAME: TEXT
DATA TYPE: CHARACTER
DATA SIZE: 80
VALUES:
DESCRIPTION: The text of the message.

OBJECT NAME: TEXT20
DATA TYPE: CHARACTER
DATA SIZE: 20
VALUES:
DESCRIPTION: The text of the message.

OBJECT NAME: TIER
DATA TYPE: ALPHANUMERIC
DATA SIZE: 1
VALUES:
DESCRIPTION: Carousel Tier.

OBJECT NAME: TIER2
DATA TYPE: ALPHANUMERIC
DATA SIZE: 2
VALUES:
DESCRIPTION: Storage location tier.

OBJECT NAME: TIME
DATA TYPE: ALPHANUMERIC
DATA SIZE: 4
VALUES:
DESCRIPTION: The time (in minutes) that a package was listed in the sorter's product file.

OBJECT NAME: TIMESTAMP
DATA TYPE: ALPHANUMERIC
DATA SIZE: 10
VALUES:
DESCRIPTION: The time (in seconds) since the Epoch

OBJECT NAME: TO FROM INDICATOR
DATA TYPE: CHARACTER
DATA SIZE: 3
VALUES: '-->' = to,' <--' = from
DESCRIPTION: Indicates the direction of the message traffic.

OBJECT NAME: TOTAL COMPONENTS
DATA TYPE: ALPHANUMERIC
DATA SIZE: 2
VALUES:
DESCRIPTION: Total components (device information structures) in message.

OBJECT NAME: TOTE NO.
DATA TYPE: ALPHANUMERIC
DATA SIZE: 7
VALUES:
DESCRIPTION: Tote Number.

OBJECT NAME: TOTE NO.
DATA TYPE: ALPHANUMERIC
DATA SIZE: 7
VALUES:
DESCRIPTION: Tote Number.

OBJECT NAME: TOTE CHAIN ID
DATA TYPE: ALPHANUMERIC
DATA SIZE: 3
VALUES:
DESCRIPTION: Tote chain ID.

OBJECT NAME: TOTE CN
DATA TYPE: ALPHANUMERIC
DATA SIZE: 1
VALUES:
DESCRIPTION: Control number in tote.

OBJECT NAME: TOTE CONSOLIDATION FLD
DATA TYPE: ALPHANUMERIC
DATA SIZE: 15
VALUES:
DESCRIPTION: Aisle area for receiving, shipment unit for packing.

OBJECT NAME: TOTE DATE
DATA TYPE: ALPHANUMERIC
DATA SIZE: 7
VALUES:
DESCRIPTION: Julian date of action.

OBJECT NAME: TOTE DESTINATION
DATA TYPE: ALPHANUMERIC
DATA SIZE: 1
VALUES: 'P' - Packing, 'R' - Receiving
DESCRIPTION: Tote packing receiving indicator.

OBJECT NAME: TOTE ID
DATA TYPE: ALPHANUMERIC
DATA SIZE: 5
VALUES:
DESCRIPTION: Unique tote identifier.

OBJECT NAME: TOTE LOCATION ID
DATA TYPE: ALPHANUMERIC
DATA SIZE: 5
VALUES:
DESCRIPTION: Current location of tote.

OBJECT NAME: TOTE NO IN CHAIN
DATA TYPE: ALPHANUMERIC
DATA SIZE: 4
VALUES:
DESCRIPTION: Tote number in chain.

OBJECT NAME: TOTE P/R IND
DATA TYPE: ALPHANUMERIC
DATA SIZE: 1
VALUES: 'P' - Packing, 'R' - Receiving
DESCRIPTION: Tote packing receiving indicator.

OBJECT NAME: TOTE PRES LOC
DATA TYPE: ALPHANUMERIC
DATA SIZE: 1
VALUES:
DESCRIPTION: Tote present location.

OBJECT NAME: TOTE ROUTING
DATA TYPE: ALPHANUMERIC
DATA SIZE: 3
VALUES:
DESCRIPTION: Tote routing.

OBJECT NAME: TOTE STATUS
DATA TYPE: ALPHANUMERIC
DATA SIZE: 1
VALUES:
DESCRIPTION: Tote status (active, inactive).

OBJECT NAME: TOTE TIME
DATA TYPE: ALPHANUMERIC
DATA SIZE: 8
VALUES:
DESCRIPTION: Time of last update.

OBJECT NAME: TOTE WEIGHT
DATA TYPE: ALPHANUMERIC
DATA SIZE: 6
VALUES:
DESCRIPTION: Weight of tote in pounds and fractions of pounds.

OBJECT NAME: TRACKING CHANGE TYPE
DATA TYPE: ALPHA
DATA SIZE: 1
VALUES:
DESCRIPTION: Type of Tracking Update being performed

OBJECT NAME: TRACKING FILE CONTENTS
DATA TYPE: BYTE
DATA SIZE: 1240
VALUES:
DESCRIPTION: This file information contains a response, and an array of Cart IDs and destinations. This array is of the maximum number of carts for the towline.

OBJECT NAME: TRAN AGV ID
DATA TYPE: ALPHANUMERIC
DATA SIZE: 3
VALUES:
DESCRIPTION: AGV ID carrying out transaction.

OBJECT NAME: TRAN DEST AREA
DATA TYPE: ALPHANUMERIC
DATA SIZE: 1
VALUES:
DESCRIPTION: Delivery area of transaction.

OBJECT NAME: TRAN DEST P&D
DATA TYPE: ALPHANUMERIC
DATA SIZE: 3
VALUES:
DESCRIPTION: Delivery P&D stand.

OBJECT NAME: TRAN ID
DATA TYPE: ALPHANUMERIC
DATA SIZE: 4
VALUES:
DESCRIPTION: Unique identifier of the current transaction.

OBJECT NAME: TRAN MODULE/PALLET IND
DATA TYPE: ALPHANUMERIC
DATA SIZE: 1
VALUES: 'M' - Module, 'P' - Pallet
DESCRIPTION: Transaction module pallet indicator.

OBJECT NAME: TRAN MODULE ID
DATA TYPE: ALPHANUMERIC
DATA SIZE: 5
VALUES:
DESCRIPTION: Transaction module or pallet ID.

OBJECT NAME: TRAN PRIORITY
DATA TYPE: ALPHANUMERIC
DATA SIZE: 1
VALUES: 'Y' - Yes, 'N' - No
DESCRIPTION: Priority code.

OBJECT NAME: TRAYS PROCESSED
DATA TYPE: NUMERIC
DATA SIZE: 6
VALUES:
DESCRIPTION: The number of trays to be processed for each workstation or function.

OBJECT NAME: TRAN SRC AREA
DATA TYPE: ALPHANUMERIC
DATA SIZE: 1
VALUES:
DESCRIPTION: Pickup area of transaction.

OBJECT NAME: TRAN SRC P&D
DATA TYPE: ALPHANUMERIC
DATA SIZE: 3
VALUES:
DESCRIPTION: Pickup P&D stand.

OBJECT NAME: TRAY OR WORKSTATION INDICATOR
DATA TYPE: CHARACTER
DATA SIZE: 1
VALUES: 'Y', 'N'
DESCRIPTION: Indicates whether tray was dedicated to this workstation.

OBJECT NAME: TRAY TRANSACTION DATA
DATA TYPE: ALPHANUMERIC
DATA SIZE: 32
VALUES:
DESCRIPTION: The data returned in the NMC Tray Transaction Message.

OBJECT NAME: TRIAX AISLE ID
DATA TYPE: NUMERIC
DATA SIZE: 3
VALUES: 001-004 at DDNV
DESCRIPTION: The data that identifies the aisle ID.

OBJECT NAME: TRIAX CARRIAGE RETURN
DATA TYPE: CHARACTER
DATA SIZE: 1
VALUES: CR
DESCRIPTION: The character that terminates the TRIAX Footer in the TRIAX messages.

OBJECT NAME: TRIAX CHECKSUM
DATA TYPE: NUMERIC
DATA SIZE: 3
VALUES:
DESCRIPTION: The checksum of the seventeen characters in the TRIAX message body.

OBJECT NAME:	TRIAX COMMAND TYPE
DATA TYPE:	NUMERIC
DATA SIZE:	2
VALUES:	01-49 (odd only) = TRIAX Conveyor PLC to Host command types at DDNV 02-48 (even only)= Host to TRIAX Conveyor PLC command types at DDNV 51-99 (odd only) = TRIAX Crane PLC to Host command types at DDNV 52-98 (even only) = Host to TRIAX Crane PLC command types at DDNV
DESCRIPTION:	The data that identifies the message type.

OBJECT NAME:	TRIAX CONVEYOR RESERVED FIELD
DATA TYPE:	NUMERIC
DATA SIZE:	5 OR 12
VALUES:	00000, 000000000000
DESCRIPTION:	The field that is reserved for further use.

OBJECT NAME:	TRIAX CRANE ID
DATA TYPE:	NUMERIC
DATA SIZE:	3
VALUES:	001-004 at DDNV
DESCRIPTION:	The data that identifies the crane ID.

OBJECT NAME:	TRIAX CRANE RESERVED FIELD
DATA TYPE:	NUMERIC
DATA SIZE:	4
VALUES:	0000
DESCRIPTION:	The field that is reserved for further use.

OBJECT NAME:	TRIAX END OF TEXT
DATA TYPE:	CHARACTER
DATA SIZE:	1
VALUES:	ETX
DESCRIPTION:	The character that begins the TRIAX Footer in the TRIAX messages.

OBJECT NAME:	TRIAX DESTINATION
DATA TYPE:	NUMERIC
DATA SIZE:	3
VALUES:	101-104 = Workstation Lanes at DDNV 201-204 = Inbound to Crane at DDNV
DESCRIPTION:	The data that identifies the destination of the storage location movement on the conveyor at DDNV.

OBJECT NAME:	TRIAX HEARTBEAT
DATA TYPE:	CHARACTER
DATA SIZE:	1
VALUES:	0, 1
DESCRIPTION:	The oscillating value which identifies a unique message.

OBJECT NAME:	TRIAX LEVEL
DATA TYPE:	NUMERIC
DATA SIZE:	2
VALUES:	01-13 at DDNV
DESCRIPTION:	The data that describes the vertical position of the rack storage.

OBJECT NAME:	TRIAX LOCATION ID
DATA TYPE:	NUMERIC
DATA SIZE:	7
VALUES:	Fixed at DDNV, see object names cited below.
DESCRIPTION:	The data at DDNV that describes the physical position that consists of the 2 position TRIAX AISLE ID, 3 position TRIAX SEGMENT NUMBER, and 2 position TRIAX LEVEL. This data is printed on the barcode/man-readable label that is attached to the slave pallet

OBJECT NAME:	TRIAX SEGMENT NUMBER
DATA TYPE:	NUMERIC
DATA SIZE:	3
VALUES:	001-040 at DDNV; odd = left side facing away from the Triax crane home position, even = right side facing away from the Triax crane home position
DESCRIPTION:	The data that describes horizontal position of the rack storage.

OBJECT NAME:	TRIAX SOURCE
DATA TYPE:	NUMERIC
DATA SIZE:	3
VALUES:	101-104 = Workstation Lanes at DDNV 201-204 = Inbound to Crane at DDNV 301-304 = Outbound from Crane at DDNV
DESCRIPTION:	The data that identifies the source of the storage location movement on the conveyor at DDNV.

OBJECT NAME:	TRIAX START OF TEXT
DATA TYPE:	CHARACTER
DATA SIZE:	1
VALUES:	STX
DESCRIPTION:	The character that comprise the TRIAX Header in the TRIAX messages.

OBJECT NAME: TRIAX STATUS CODE
DATA TYPE: NUMERIC
DATA SIZE: 2
VALUES: 00-99
DESCRIPTION: The data which describes a successful or an unsuccessful completion.

OBJECT NAME: TYPE
DATA TYPE: ALPHANUMERIC
DATA SIZE: 2
VALUES:
DESCRIPTION: Indicates which inspection type is being performed.

OBJECT NAME: UNACKNOWLEDGED MESSAGES
DATA TYPE: NUMERIC
DATA SIZE: 5
VALUES:
DESCRIPTION: Number of unacknowledged messages sent by the Carousel Interface Box (CIB).

OBJECT NAME: UNIT NUMBER
DATA TYPE: CHARACTER
DATA SIZE: 1
VALUES: '1', '2'
DESCRIPTION: Unit number of device.

OBJECT NAME: UNLOCK
DATA TYPE: ALPHANUMERIC
DATA SIZE: 1
VALUES:
DESCRIPTION: The status of a lane at M/H.

OBJECT NAME: UPDATE CODE
DATA TYPE: NUMERIC
DATA SIZE: 2
VALUES:
DESCRIPTION: The subcontroller update code. Used to signify which information is being updated by the SUP transaction. Its meaning will vary depending on the subcontroller sending the update.

OBJECT NAME: UPLOAD REQUEST
DATA TYPE: ALPHANUMERIC
DATA SIZE: 2
VALUES: ‘07’ (upload destination file), ‘10’ (upload first loop tracking file) ‘11’ (upload second loop tracking file’, ‘0’ no upload
DESCRIPTION: This indicates the type of upload requested for the towline.

OBJECT NAME: VARIABLE HELP PAGE DATA
DATA TYPE: ALPHANUMERIC
DATA SIZE: 80 x 24
VALUES:
DESCRIPTION: Help data.

OBJECT NAME: VERTICAL POSITION
DATA TYPE: ALPHANUMERIC
DATA SIZE: 2
VALUES:
DESCRIPTION: Identifies the vertical aspect of a location in the NMC stacker.

OBJECT NAME: WEIGHT
DATA TYPE: NUMERIC
DATA SIZE: 6
VALUES: 00.00 to 9999.00
DESCRIPTION: Weight in pounds.

OBJECT NAME: WEIGHT UNIT INDICATOR
DATA TYPE: ALPHANUMERIC
DATA SIZE: 2
VALUES: "LB"
DESCRIPTION: Indicates the unit (pounds) that weight is measured in.

OBJECT NAME: WIDTH
DATA TYPE: NUMERIC
DATA SIZE: 3
VALUES:
DESCRIPTION: Width in inches.

OBJECT NAME: WHSE DROP PT
DATA TYPE: CHARACTER
DATA SIZE: 2
VALUES:
DESCRIPTION: Indicates the drop point for the warehouse.

OBJECT NAME: WHSE NUMBER
DATA TYPE: CHARACTER
DATA SIZE: 2
VALUES:
DESCRIPTION: Indicates the warehouse number.

OBJECT NAME: WKS2 ID
DATA TYPE: ALPHANUMERIC
DATA SIZE: 3
VALUES:
DESCRIPTION: Workstation ID

OBJECT NAME: WKS2 NAME
DATA TYPE: ALPHANUMERIC
DATA SIZE: 4
VALUES:
DESCRIPTION: Name associated with workstation

OBJECT NAME: WKS2 CAPACITY
DATA TYPE: NUMERIC
DATA SIZE: 1
VALUES:
DESCRIPTION: Capacity of workstation

OBJECT NAME: WKS2 ENRT COUNT
DATA TYPE: NUMERIC
DATA SIZE: 1
VALUES:
DESCRIPTION: Pallet enroute count for workstation

OBJECT NAME: WKS2 IN COUNT
DATA TYPE: NUMERIC
DATA SIZE: 1
VALUES:
DESCRIPTION: Count of pallets at workstation

OBJECT NAME: WKS2 SPAL ID
DATA TYPE: ALPHANUMERIC
DATA SIZE: 7
VALUES:
DESCRIPTION: ID of pallet at workstation

OBJECT NAME: WKS2 SPAL PRES
DATA TYPE: ALPHANUMERIC
DATA SIZE: 1
VALUES:
DESCRIPTION: Indicator of pallet presence

OBJECT NAME: WKS2 SPAL DEST
DATA TYPE: ALPHANUMERIC
DATA SIZE: 3
VALUES:
DESCRIPTION: Destination of pallet at workstation

OBJECT NAME: WKS2 FAULT
DATA TYPE: ALPHANUMERIC
DATA SIZE: 2
VALUES:
DESCRIPTION: Fault associated with workstation

OBJECT NAME: WKS2 LOGGED IN
DATA TYPE: ALPHANUMERIC
DATA SIZE: 1
VALUES:
DESCRIPTION: Type of work that a workstation is logged in for

OBJECT NAME: WKS2 TERMINAL ID
DATA TYPE: ALPHANUMERIC
DATA SIZE: 9
VALUES:
DESCRIPTION: Terminal ID for workstation

OBJECT NAME: WKS2 DESCRIPTION
DATA TYPE: ALPHANUMERIC
DATA SIZE: 25
VALUES:
DESCRIPTION: Description of workstation

OBJECT NAME: WKS2 TIMESTAMP
DATA TYPE: NUMERIC
DATA SIZE: 1
VALUES:
DESCRIPTION: Timestamp of last activity at workstation

OBJECT NAME: WKS2 CONSOL
DATA TYPE: ALPHANUMERIC
DATA SIZE: 15
VALUES:
DESCRIPTION: Shipment Unit Number (SUN), also known as consolidation, associated with a workstation

OBJECT NAME: WKST AREA
DATA TYPE: CHARACTER
DATA SIZE: 4
VALUES:
DESCRIPTION: Indicates the workstation area.

OBJECT NAME: WKST CAPAC
DATA TYPE: NUMERIC
DATA SIZE: signed word
VALUES:
DESCRIPTION: The number of carts a workstation can accommodate.

OBJECT NAME: WKST CHAIN ID
DATA TYPE: CHARACTER
DATA SIZE: 4
VALUES:
DESCRIPTION: The identifier of the chain assigned to the workstation.

OBJECT NAME: WKST CON NO
DATA TYPE: CHARACTER
DATA SIZE: 7
VALUES:
DESCRIPTION: The control number of the load arriving at the workstation.

OBJECT NAME: WKST CONVEY ID
DATA TYPE: CHARACTER
DATA SIZE: 7
VALUES:
DESCRIPTION: The identifier of the conveyance arriving at the workstation.

OBJECT NAME: WKST COUNT ENRT
DATA TYPE: NUMERIC
DATA SIZE: signed word
VALUES:
DESCRIPTION: The number of carts enroute to a spur.

OBJECT NAME: WKST COUNT IN
DATA TYPE: NUMERIC
DATA SIZE: signed word
VALUES:
DESCRIPTION: The number of carts at a spur.

OBJECT NAME: WKST COUNT REQD
DATA TYPE: CHARACTER
DATA SIZE: 1
VALUES:
DESCRIPTION: A flag indicating cart counts required at a workstation.

OBJECT NAME: WKST CUR SHIP U NO
DATA TYPE: CHARACTER
DATA SIZE: 15
VALUES:
DESCRIPTION: The shipment unit that is being packed.

OBJECT NAME: WKST DESIGNATOR
DATA TYPE: CHARACTER
DATA SIZE: 4
VALUES:
DESCRIPTION: The DSS Workstation Designation.

OBJECT NAME: WKST DFLT DEST
DATA TYPE: CHARACTER
DATA SIZE: 4
VALUES:
DESCRIPTION: The default destination for material that is being released.

OBJECT NAME: WKST EMPL ID
DATA TYPE: CHARACTER
DATA SIZE: 5
VALUES:
DESCRIPTION: The employee identification.

OBJECT NAME: WKST ID
DATA TYPE: CHARACTER
DATA SIZE: 3
VALUES:
DESCRIPTION: The workstation identifier

OBJECT NAME: WKST LOCKED
DATA TYPE: CHARACTER
DATA SIZE: 1
VALUES:
DESCRIPTION: The workstation is locked indicator, set when a military pallet is enroute from Receipt Induction.

OBJECT NAME: WKST LOGGED IN
DATA TYPE: CHARACTER
DATA SIZE: 1
VALUES:
DESCRIPTION: The operator has logged into to DSS indicator.

OBJECT NAME: WKST LOG STA
DATA TYPE: CHARACTER
DATA SIZE: 1
VALUES:
DESCRIPTION: The logical workstation status (either active or inactive).

OBJECT NAME: WKST MOVE CON NO
DATA TYPE: CHARACTER
DATA SIZE: 7
VALUES:
DESCRIPTION: The control number of the load arriving at the workstation.

OBJECT NAME: WKST NEXT LOOP
DATA TYPE: NUMERIC
DATA SIZE: signed word
VALUES:
DESCRIPTION: The next loop that the cart will be routed to.

OBJECT NAME: WKST NEXT SPUR
DATA TYPE: CHARACTER
DATA SIZE: 4
VALUES:
DESCRIPTION: The towline spur associated with the workstation.

OBJECT NAME: WKST OVER
DATA TYPE: CHARACTER
DATA SIZE: 1
VALUES:
DESCRIPTION: A workstation override indicator for the M/H towline queue.

OBJECT NAME: WKST PALLET PRESENT
DATA TYPE: CHARACTER
DATA SIZE: 1
VALUES:
DESCRIPTION: Military or slave pallet indicator..

OBJECT NAME: WKST PHY STA
DATA TYPE: CHARACTER
DATA SIZE: 1
VALUES:
DESCRIPTION: The physical status of a workstation (online, offline).

OBJECT NAME: WKST PLC NO
DATA TYPE: CHARACTER
DATA SIZE: 3
VALUES:
DESCRIPTION: The identification number of the PLC.

OBJECT NAME: WKST PREV LOOP
DATA TYPE: NUMERIC
DATA SIZE: signed word
VALUES:
DESCRIPTION: The loop from which the cart was just diverted.

OBJECT NAME: WKST PRIOR
DATA TYPE: CHARACTER
DATA SIZE: 1
VALUES:
DESCRIPTION: The priority assigned to the queue.

OBJECT NAME: WKST RL COUNT
DATA TYPE: NUMERIC
DATA SIZE: signed word
VALUES:
DESCRIPTION: The number of ready lists queued to this workstation.

OBJECT NAME: WKST RL QUEUE
DATA TYPE: CHARACTER
DATA SIZE: 2
VALUES:
DESCRIPTION: The identifier of the ready list queue.

OBJECT NAME: WKST SPAL ID
DATA TYPE: CHARACTER
DATA SIZE: 7
VALUES:
DESCRIPTION: The slave pallet ID currently at the workstation.

OBJECT NAME: WKST SPUR
DATA TYPE: CHARACTER
DATA SIZE: 4
VALUES:
DESCRIPTION: The towline spur associated with workstation.

OBJECT NAME: WKST TERMINAL ID
DATA TYPE: CHARACTER
DATA SIZE: 8
VALUES:
DESCRIPTION: The DSS workstation associated with workstation.

OBJECT NAME: WKST WORK STN
DATA TYPE: CHARACTER
DATA SIZE: 4
VALUES:
DESCRIPTION: Indicates the workstation.

OBJECT NAME: WKST WORK STN TY
DATA TYPE: CHARACTER
DATA SIZE: 2
VALUES:
DESCRIPTION: A code indicating the type of workstation.

OBJECT NAME: WORK FLAGS
DATA TYPE: ALPHANUMERIC
DATA SIZE: 5
VALUES:
DESCRIPTION: Identifies the NMC Workstation Assignment Flags.

OBJECT NAME: WORK TYPE
DATA TYPE: ALPHANUMERIC
DATA SIZE: 1
VALUES:
DESCRIPTION: Identifies the Work Type in the SMM.

OBJECT NAME: WORKSTATION
DATA TYPE: ALPHANUMERIC
DATA SIZE: 4
VALUES:
DESCRIPTION: Identifies the NMC workstation or function.

OBJECT NAME: WORKSTATION ID
DATA TYPE: ALPHANUMERIC
DATA SIZE: 4
VALUES:
DESCRIPTION: Workstation ID.

OBJECT NAME: WORKSTATION NUMBER
DATA TYPE: ALPHANUMERIC
DATA SIZE: 2
VALUES: '01'-'06'
DESCRIPTION: Identifies the subject workstation.

OBJECT NAME: WORKSTATION OR FUNCTION
DATA TYPE: ALPHANUMERIC
DATA SIZE: 2
VALUES: '01'-'06' OR 'AA' - 'PP'
DESCRIPTION: Identifies the subject workstation or function.

OBJECT NAME: Y109 CASE RESERVED FIELD
DATA TYPE: NUMERIC
DATA SIZE: 1 OR 4
VALUES: ‘0’, ‘0000’
DESCRIPTION: The field that is reserved for further use.

OBJECT NAME:	Y109 DESTINATION
DATA TYPE:	NUMERIC
DATA SIZE:	3
VALUES:	101-199 = Pallet destinations at Bldg. Y-109 201-299 = Case destinations at Bldg. Y-109
DESCRIPTION:	The data that identifies the destination of the storage location movement on the conveyor at DDNV.

OBJECT NAME:	Y109 MESSAGE TYPE
DATA TYPE:	NUMERIC
DATA SIZE:	2
VALUES:	‘01’, ‘03’, ‘09’ = Y109 PLC to Host message types ‘02’, ‘04’, 06’ = Host to Y109 PLC message types
DESCRIPTION:	The data that identifies the message type.

OBJECT NAME:	Y109 MODE RESERVED FIELD
DATA TYPE:	NUMERIC
DATA SIZE:	15 OR 16
VALUES:	‘000000000000000’,‘0000000000000000’
DESCRIPTION:	The field that is reserved for further use.

OBJECT NAME:	Y109 PALLET RESERVED FIELD
DATA TYPE:	NUMERIC
DATA SIZE:	1 OR 4
VALUES:	‘0’,‘0000’
DESCRIPTION:	The field that is reserved for further use.

OBJECT NAME:	Y109 PLC MODE
DATA TYPE:	CHARACTER
DATA SIZE:	1
VALUES:	‘A’ = Automatic mode; ‘M’ = Manual mode
DESCRIPTION:	The data which describes the operating mode of the case or pallet sortation system at Bldg. Y-109.

OBJECT NAME:	Y109 SCANNER ID
DATA TYPE:	NUMERIC
DATA SIZE:	3
VALUES:	100 = Pallet Scanner at Bldg. Y-109 200= Case Scanner at Bldg. Y-109
DESCRIPTION:	The data that identifies the source where the barcode is scanned in scan messages and the pallet or case conveyor for PLC mode messages.

OBJECT NAME: Y109 SEQUENCE NR
DATA TYPE: NUMERIC
DATA SIZE: 5
VALUES: ‘00001’ - ‘99999’
DESCRIPTION: A number generated by the PLC that uniquely identifies a barcode. This sequence number is used by the PLC and the ECS only echoes back this field the corresponding move request message.

OBJECT NAME: ZONE_CAPC
DATA TYPE: NUMERIC
DATA SIZE: 2
VALUES:
DESCRIPTION: Max loads enroute to zone

OBJECT NAME: ZONE_ENRT_COUNT
DATA TYPE: NUMERIC
DATA SIZE: 2
VALUES:
DESCRIPTION: Number of pallets enroute to workstation

OBJECT NAME: ZONE_FAULT
DATA TYPE: NUMERIC
DATA SIZE: 3
VALUES: 1 = PE blocked, no load ID present
2 = PE not blocked, load ID present
3 = Transfer failed to raise
4 = Transfer failed to lower
5 = Stop failed to raise
6 = Stop failed to lower
7 = Shuttle detect PE blocked
8 = Size station PE blocked
9 = Weigh scale output error
DESCRIPTION: Zone Error Code

OBJECT NAME: ZONE_ID
DATA TYPE: NUMERIC
DATA SIZE: 3
VALUES:
DESCRIPTION: Conveyor Zone Number

OBJECT NAME: ZONE_LOAD_ID
DATA TYPE: ALPHANUMERIC
DATA SIZE: 8
VALUES:
DESCRIPTION: Load ID of pallet in Zone

OBJECT NAME: ZONE_LOAD_DEST
DATA TYPE: NUMERIC
DATA SIZE: 3
VALUES:
DESCRIPTION: Destination for load in Edit Tracking Data screen

OBJECT NAME: ZONE_LOAD_PRES
DATA TYPE: NUMERIC
DATA SIZE: 1
VALUES: 0 = load clear; 1 = load present
DESCRIPTION: Load Present Indicator

OBJECT NAME: ZONE_LOGGED_IN
DATA TYPE: ALPHA
DATA SIZE: 1
VALUES: "Y" if logged in, blank otherwise
DESCRIPTION: Indicator if Workstation is logged in for picks

OBJECT NAME: ZONE_NAME
DATA TYPE: ALPHANUMERIC
DATA SIZE: 4
VALUES:
DESCRIPTION: Workstation mnemonic

OBJECT NAME: ZONE_SECT_ID
DATA TYPE: NUMERIC
DATA SIZE: 3
VALUES:
DESCRIPTION: Zone Section Number

OBJECT NAME: ZONE_TERMINAL_ID
DATA TYPE: ALPHA
DATA SIZE: 8
VALUES:
DESCRIPTION: DSS Terminal ID where applicable (PKxx, INxx), blank otherwise

OBJECT NAME: ZONE ID
DATA TYPE: ALPHANUMERIC
DATA SIZE: 2
VALUES:
DESCRIPTION: Identifies the PLC zone.

APPENDIX C ECS SCREENS

1.0 Reference User Interface Process Narratives section.

LIST OF EFFECTIVE PAGES
Software Requirements Specification

Replace with Latest Document. Destroy Superseded Document.

Date of issue for revision and changed document is:

Revision 0/Change 0.....05/15/96
Revision 0/Change 1.....11/25/96
Revision 1/Change 0.....04/15/97
Revision 2/Change 0.....11/13/97
Revision 2/Change 1.....01/27/98
Revision 3/Change 0.....10/15/99
*Revision 4/Change 0.....
*Revision 5/Change 0.....
**Revision 6/Change 0.....08/20/00
Revision 6/Change 1.....01/25/01

* = Revision not distributed or added to PVCS due to dual baselines
** = Revision added to PVCS pending transition to S.Schlesiger

TOTAL NUMBER OF PAGES IN THIS REVISION IS THE ENTIRE DOCUMENT, CONSISTING OF THE FOLLOWING:

PAGE NO.	REV. NO.	REASON FOR CHANGE
COVER	6/Change 1	Changed Revision 3/Change 0 and the date.
i-ii	6/Change 1	TOC reflects changes and realignments throughout document.
1-1	6/Change 1	Updated Triax reference.
3-1 through 3-	6/Change 1	Updated diagram flows and descriptions with Triax data
3-352 -3-442	6/Change 1	Added Triax diagram flows and descriptions.
Appendix A	6/Change 1	Updated Appendix A with Triax data.
Appendix B	6/Change 1	Updated Appendix B with Triax data.
Appendix C	6/Change 1	Updated Appendix C with Triax data.
Appendix D	6/Change 1	Updated Appendix D with Triax data.
Appendix F	6/Change 1	Added Upper Tier screens for Triax changes.
Appendix G	6/Change 1	Updated Appendix G with Triax data.

LIST OF EFFECTIVE PAGES
Software Requirements Specification

Replace with Latest Document. Destroy Superseded Document.

Date of issue for revision and changed document is:

Revision 6/Change 2.....09/03/01

TOTAL NUMBER OF PAGES IN THIS REVISION IS THE ENTIRE DOCUMENT, CONSISTING OF THE FOLLOWING:

PAGE NO.	REV. NO.	REASON FOR CHANGE
COVER	6/Change 2	Changed revision number and the date.
i-ii	6/Change 2	TOC reflects changes and realignments throughout document.
1-1	6/Change 2	Updated Active Item reference.
Section 3	6/Change 2	Updated diagram flows and descriptions with Active Item data.
Appendix A through G	6/Change 2	Updated Appendix A through G with Active Item data.

LIST OF EFFECTIVE PAGES
Software Requirements Specification

Replace with Latest Document. Destroy Superseded Document.

Date of issue for revision and changed document is:

Revision 7/Change 0.....05/30/02

TOTAL NUMBER OF PAGES IN THIS REVISION IS THE ENTIRE DOCUMENT, CONSISTING OF THE FOLLOWING:

PAGE NO.	REV. NO.	REASON FOR CHANGE
COVER	7/Change 0	Changed revision number to keep up with current documentation.
TOC	7/Change 0	TOC reflects changes and realignments throughout document.
1-2	7/Change 0	Added reference to the Freight Terminal at Building Y-109 at DDNV in association with SCR# DSS-RE2-016.
2-1	7/Change 0	Updated references to appendix changes.
3-1	7/Change 0	Updated document per ECS documentation meeting. Deleted references to Appendix C, D, E, and F. Updated references to Appendix A to Appendix B.
3-606	7/Change 0	Added reference to Norfolk Virginia DPI Tote Conveyor Subcontroller. Changes in association with SCR DSS-RE2-017
Section 3.3	7/Change 0	Delete Upper Tier reference.
Appendix A/B	7/Change 0	Switched Appendix A and B numbering.
A-4	7/Change 0	Added reference to Norfolk Virginia DPI Tote Conveyor Subcontroller. Changes in association with SCR DSS-RE2-017
B-90	7/Change 0	Added Norfolk Virginia DPI references25 in association with SCR DSS-RE2-017
Appendix C	7/Change 0	Deleted Appendix C.
Appendix D	7/Change 0	Deleted Appendix D.
Appendix E	7/Change 0	Moved/Renumbered to Appendix C.
Appendix F	7/Change 0	Deleted Appendix F.
Appendix G	7/Change 0	Deleted Appendix G.

LIST OF EFFECTIVE PAGES
Software Requirements Specification

Replace with Latest Document. Destroy Superseded Document.

Date of issue for revision and changed document is:

Revision 7/Change 1.....07/12/02

TOTAL NUMBER OF PAGES IN THIS REVISION IS THE ENTIRE DOCUMENT, CONSISTING OF THE FOLLOWING:

PAGE NO.	REV. NO.	REASON FOR CHANGE
COVER	7/Change 1	Changed revision number and the date.
i-ii	7/Change 1	TOC reflects changes and realignments throughout document.
1-1	7/Change 1	Updated PS Tote reference.
2-1	7/Change 1	Updated entire section 2.0 Referenced Documents.
3-1	7/Change 1	Updated diagram flows and descriptions with PS Tote data in association with SCR# DSS-PW0-131.
Appendix A through G	7/Change 1	Updated Appendix A through G with PS Tote data in association with SCR# DSS-PW0-131.

LIST OF EFFECTIVE PAGES
Software Requirements Specification

Replace with Latest Document. Destroy Superseded Document.

Date of issue for revision and changed document is:

Revision 7/Change 2.....10/18/02

TOTAL NUMBER OF PAGES IN THIS REVISION IS THE ENTIRE DOCUMENT, CONSISTING OF THE FOLLOWING:

PAGE NO.	REV. NO.	REASON FOR CHANGE
COVER	7/Change 2	Changed revision number and the date.
i-ii	7/Change 2	TOC reflects changes and realignments throughout document.
3-37	7/Change 2	Updated Stacker in association with SCR# DSS-RE2-021
3-126	7/Change 2	Added Norfolk Ministacker to data flow diagram. Changes in association with SCR DSS-NV2-003.
3-291 thru 3-295	7/Change 2	Added Norfolk Ministacker data flow diagrams, screens and process narrative. Changes in association with SCR DSS-NV2-003.

LIST OF EFFECTIVE PAGES
Software Requirements Specification

Replace with Latest Document. Destroy Superseded Document.

Date of issue for revision and changed document is:

Revision 7/Change 3.....12/28/02

TOTAL NUMBER OF PAGES IN THIS REVISION IS THE ENTIRE DOCUMENT, CONSISTING OF THE FOLLOWING:

PAGE NO.	REV. NO.	REASON FOR CHANGE
COVER	7/Change 3	Changed revision number and the date.
i-ii	7/Change 3	TOC reflects changes and realignments throughout document.
3-302 thru 3-328	7/Change 3	Updated and added new Stacker DFDs and PNs in association with SCR# DSS-DC0-996
B1 thru B168	7/Change 3	Updated Data Dictionary in association with SCR# DSS-DC0-996

LIST OF EFFECTIVE PAGES
Software Requirements Specification

Replace with Latest Document. Destroy Superseded Document.

Date of issue for revision and changed document is:

Revision 7/Change 4.....08/01/03

TOTAL NUMBER OF PAGES IN THIS REVISION IS THE ENTIRE DOCUMENT, CONSISTING OF THE FOLLOWING:

PAGE NO.	REV. NO.	REASON FOR CHANGE
COVER	7/Change 4	Changed revision number and the date.
i-ii	7/Change 4	TOC reflects changes and realignments throughout document.
1-2	7/Change 4	Updated paragraph 1.2 to include DDJC Mission/CCP Sorter data in association with SCR# DSS-JC3-008.
2-3	7/Change 4	Added DDJC referenced document in association with SCR# DSS-JC3-008.
3-1	7/Change 4	Updated entire section to include DDJC Sorter data in association with SCR# DSS-JC3-008.
Appendix A	7/Change 4	Updated paragraph 1.3 to include DDJC Mission/CCP Sorter reference in association with SCR# DSS-JC3-008.
Appendix B	7/Change 4	Updated Data Dictionary in association with SCR# DSS-JC3-008.

LIST OF EFFECTIVE PAGES
Software Requirements Specification

Replace with Latest Document. Destroy Superseded Document.

Date of issue for revision and changed document is:

Revision 7/Change 5.....08/29/03

NOTE: TOTAL NUMBER OF PAGES IN THIS REVISION IS THE ENTIRE DOCUMENT, CONSISTING OF THE FOLLOWING CHANGES:

PAGE NO.	REV. NO.	REASON FOR CHANGE
COVER and throughout document	7/Change 5	Changed revision/Change number and the date.
i-xvii	7/Change 5	Updated TOC.
1-1 and 1-2	7/Change 5	Added reference to DDMA at Richmond, VA in association with SCR# DSS-MA2-116.

LIST OF EFFECTIVE PAGES
Software Requirements Specification

Replace with Latest Document. Destroy Superseded Document.

Date of issue for revision and changed document is:

Revision 7/Change 6.....11/18/03

NOTE: TOTAL NUMBER OF PAGES IN THIS REVISION IS THE ENTIRE DOCUMENT, CONSISTING OF THE FOLLOWING CHANGES:

PAGE NO.	REV. NO.	REASON FOR CHANGE
COVER and throughout document	7/Change 6	Changed revision/Change number and the date.
i-xvii	7/Change 6	Updated TOC.
Entire document	7/Change 6	Added reference to DDDE at Germany in association with SCR# DSS-RE2-132.

LIST OF EFFECTIVE PAGES
Software Requirements Specification

Replace with Latest Document. Destroy Superseded Document.

Date of issue for revision and changed document is:

Revision 7/Change 7.....04/14/04

NOTE: TOTAL NUMBER OF PAGES IN THIS REVISION IS THE ENTIRE DOCUMENT, CONSISTING OF THE FOLLOWING CHANGES:

PAGE NO.	REV. NO.	REASON FOR CHANGE
COVER and throughout document	7/Change 7	Changed Revision/Change number and the date.
i-xx	7/Change 7	Updated TOC.
3-257	7/Change 7	Added updates to User Interface AWOS DFD change. Changes in association with SCR# DSS-SP3-106.
3-268	7/Change 7	Added updates to include User Interface AWOS changes. Changes in association with SCR# DSS-SP3-106.
3-312 thru 3-313	7/Change 7	Corrected reference to U125.PN.
B-10	7/Change 7	Added ALAN IS 10LBS reference to Data Dictionary. Changes in association with SCR# DSS-SP3-106.
B-76	7/Change 7	Added ALAN IS 10LBS reference to Data Definitions. Changes in association with SCR# DSS-SP3-106.